MITSUBISHI

Digital-Analog Converter Module Type A1S68DAV/DAI

User's Manual

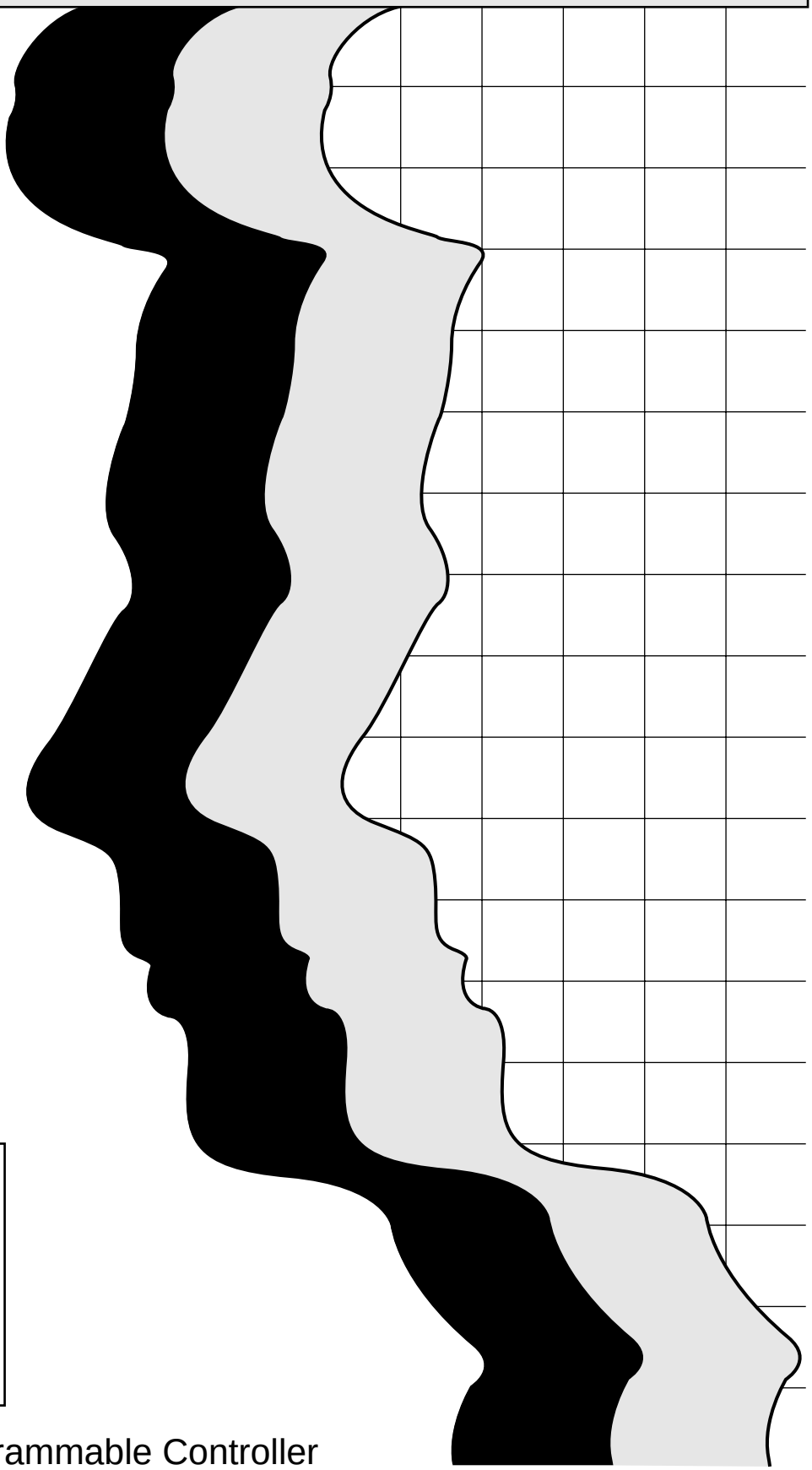

A

MELSEC

Mitsubishi Programmable Controller

● SAFETY PRECAUTIONS ●

(Always read these instructions before using this equipment.)

Before using this product, please read this manual and the relevant manuals introduced in this manual carefully and pay full attention to safety to handle the product correctly.
The instructions given in this manual are concerned with this product. Refer to the User's Manual of the CPU module in use for details on the safety instructions for the programmable logic controller system.
In this manual, the safety instructions are ranked as "DANGER" and "CAUTION".

⚠ DANGER	Indicates that incorrect handling may cause hazardous conditions, resulting in death or severe injury.
⚠ CAUTION	Indicates that incorrect handling may cause hazardous conditions, resulting in medium or slight personal injury or physical damage.

Note that the ⚠ **CAUTION** level may lead to a serious consequence according to the circumstances. Always follow the instructions of both levels because they are important to personal safety.

Store this manual in a safe place so that you can take it out and read it whenever necessary. Always forward it to the end user.

[DESIGN PRECAUTIONS]

⚠ DANGER

- Install a safety circuit external to the PLC that keeps the entire system safe even when there are problems with the external power supply or the PLC module.
  Otherwise, trouble could result from erroneous output or erroneous operation.
  (1) The analog output state will differ according to the setting state of the various functions for controlling the analog output.
  Take special care when making the settings.
  Refer to section 3.3.2 for details on the analog output state.
  (2) If there is a fault in the output element or the internal circuit, correct outputs may not be possible or erroneous outputs may be made.
  Provide a circuit to externally monitor output signals that could lead to major faults.

⚠ CAUTION

- Do not bunch the control wires or communication cables with the main circuit or power wires, or install them close to each other.
  They should be installed 100mm (3.94inch) or more from each other.
  Not doing so could result in noise that would cause erroneous operation.
- At power ON/OFF, voltage or current may instantaneously be output from the output terminal of this module.
  In such case, wait until the analog output becomes stable to start controlling the external device.

[INSTALLATION PRECAUTIONS]

⚠ CAUTION

- Use the PLC in an environment that meets the general specifications given in the User's Manual of the CPU module in use.
  Using this PLC in an environment outside the range of the general specifications could result in electric shock, fire, erroneous operation, and damage to or deterioration of the product.
- Install so that the pegs on the bottom of the module fit securely into the base unit peg holes, and use the specified torque to tighten the module's fixing screws.
  Not installing the module correctly could result in erroneous operation, damage, or pieces of the product falling.

[WIRING PRECAUTIONS]

⚠ CAUTION

- Ground the FG terminal especially when high levels of noise are identified.
  Failure to observe this could lead to erroneous operation.
- When wiring in the PLC, be sure that it is done correctly by checking the product's rated voltage and the terminal layout. Connecting a power supply that is different from the rating or incorrectly wiring the product could result in fire or damage.
- Tightening the terminal screws with the specified torque.
  If the terminal screws are loose, it could result in short circuits, fire, or erroneous operation.
  Tightening the terminal screws too far may cause damages to the screws and/or the module, resulting in fallout, short circuits, or malfunction.
- Be sure there are no foreign substances such as sawdust or wiring debris inside the module.
  Such debris could cause fires, damage, or erroneous operation.

[STARTUP AND MAINTENANCE PRECAUTIONS]

⚠ DANGER

- Do not touch the terminals while power is on.
  Doing so could cause shock or erroneous operation.
- Be sure to shut off all phases of the external power supply used by the system before cleaning or retightening the terminal screws. If you do not switch off the external power supply, it will cause failure or malfunction of the module.

⚠ CAUTION

- **Do not disassemble or modify the module.**
  Doing so could cause trouble, erroneous operation, injury, or fire.
- **Be sure to shut off all phases of the external power supply used by the system before mounting or dismounting the module.**
  If you do not switch off the external power supply, it will cause failure or malfunction of the module.
- Do not install/remove the terminal block more than 50 times after the first use of the product. (IEC 61131-2 compliant)
- Before handling the module, always touch grounded metal, etc. to discharge static electricity from the human body.
  Failure to do so can cause the module to fail or malfunction.

[DISPOSAL PRECAUTIONS]

⚠ CAUTION

- **When disposing of the product, handle it as industrial waste.**

REVISIONS

* The manual number is given on the bottom left of the back cover.

Print Date	*Manual Number	Revision
Aug., 1995	IB (NA) 66587-A	First edition
Apr., 2001	IB (NA) 66587-B	Addition SAFETY PRECAUTIONS, WARRANTY Correction Chapter 2, Section 3.1, 3.2, 3.3.1, 4.2, 4.5.2, 5.4, 6.4
Dec., 2003	IB (NA) 66587-C	Addition Conformation to the EMC Directive and Low Voltage Instruction Partial Correction SAFETY PRECAUTIONS, Section 4.5.2
Jul., 2004	IB (NA) 66587-D	Addition SAFETY PRECAUTIONS, Chapter 5 Partial Correction Section 3.1, 3.6.4, WARRANTY
Mar., 2006	IB (NA) 66587-E	Partial Correction SAFETY PRECAUTIONS, Conformation to the EMC Directive and Low Voltage Instruction, Section 3.2, 3.3.1, 3.3.2, 4.3, APPENDIX 2.1, 2.2
Sep.,2006	IB (NA) 66587-F	Partial Correction SAFETY PRECAUTIONS,
Jul., 2007	IB (NA) 66587-G	Partial Correction CONTENTS, Section 4.3

Japanese Manual Version SH-3553-G

Conformation to the EMC Directive and Low Voltage Instruction

When incorporating a Mitsubishi PLC that is compliant with the EMC and low voltage directives into any other product and ensuring compliance with these directives, refer to Chapter 3 "EMC and Low Voltage Directives" of the User s Manual (Hardware) for the PLC CPU included with the CPU module or base unit.
A module compliant with the EMC and low voltage directives bears a CE mark logo printed on the rating plate.
To make this product compliant with the EMC and low voltage directives, refer to "CC-Link module" in Chapter 3 "EMC and Low Voltage Directives" of the User s Manual (Hardware) for the CPU module.

INTRODUCTION

Thank you for choosing the Mitsubishi MELSEC-A Series of General Purpose Programmable Controllers. Please read this manual carefully so that the equipment is used to its optimum. A copy of this manual should be forwarded to the end User.

CONTENTS

1. INTRODUCTION

This manual describes specifications, handling, programming and other information on the A1S68DAV digital-to-analog voltage converter module (referred to as "A1S68DAV") and the A1S68DAI digital-to-analog current converter module (referred to as "A1S68DAI") for use with a MELSEC-A series compact building block type CPU module.

(1) A1S68DAV

Used to convert incoming digital values (16-bit signed binary data) which are set with the PLC CPU to analog values (voltage outputs ranging from -10 V to 10 V).

(2) A1S68DAI

Used to convert incoming digital values (16-bit signed binary data) which are set with the PLC CPU to analog values (voltage outputs ranging from -4 mA to 20 mA).

A1S68DAV and A1S68DAI are referred to as "A1S68DAV/DAI" or "module" in this manual.

1.1 Features

(1) Allows digital-to-analog conversion for 8 channels.

The A1S68DAV/DAI can output analog values (voltage/current) to 8 external devices.

(2) High-speed conversion is possible.

8-channel digital-to-analog conversion can be executed within 4 ms.

(3) Allows analog output to be enabled/disabled on a channel basis.

Analog value output can be enabled or disabled for each channel by the sequence program.

The channel disabled for analog output provides an analog output value of 0 V or 0 mA.

(4) Allows setting of analog output to be held or cleared (all channels in batch) at STOP of PLC CPU.

Holding of analog output when the PLC CPU is at STOP can be set with the HLD/CLR terminal.

2. SYSTEM CONFIGURATION

(1) Applicable CPUs

- A1SJCPU(S3)
- A1SJHCPU(S8)
- A1SCPU(S1)
- A1SCPUC24-R2
- A1SHCPU
- A2SCPU(S1)
- A2SHCPU(S1)
- A2ASCPU(S1/S30)
- A2USHCPU-S1
- Q2ASCPU(S1)
- Q2ASHCPU(S1)
- A52GCPU

(2) Number of modules that can be loaded

There is no restriction on the number of modules loaded, provided the available I/O point range of the CPU used is not exceeded.

(3) Usable slots

The A1S68DAV/DAI can be loaded in any slot of a base unit, provided the following precautions are observed.

If loading the module in a slot of an extension base unit that does not have a power supply module (A1S52B(S1), A1S55B(S1), A1S58B(S1)), note that the power supply capacity may be insufficient.

When loading the A1S68DAV/DAI on an extension base unit that has no power supply module, select an appropriate power supply module, main base unit, extension base unit, and extension cable by carefully considering the following points:

1) Current capacity of the power supply module on the main base unit
2) Voltage drop in the main base unit
3) Voltage drop in the extension base unit
4) Voltage drop in the extension base unit

(4) Data link system

In a data link system, the A1S68DAV/DAI can be loaded at a master station, local station, or remote I/O station. For a program example for a remote I/O station, refer to the MELSECNET/B Data Link System Reference Manual.

REMARK

Refer to the following manuals for details on the ranges of I/O points and formulae for calculating voltage drop.

- A1SJCPU(S1) User's Manual ····· IB 66446
- A1SCPU/A1SCPUC24-R2/A2SCPU User's Manual ····· IB 66320
- A2ASCPU(S1/S30) User's Manual ····· IB 66480
- A2USHCPU-S1 User's Manual ····· IB 66789
- A1SJH(S8)/A1SH/A2SHCPU(S1) User's Manual ····· IB 66779
- Q2AS(H)CPU(S1) User's Manual ····· SH 3599

3. SPECIFICATIONS

This chapter describes the general specifications of MELSEC A series PLCs, performance specifications, and I/O conversion characteristics of the A1S68DAV/DAI.

3.1 General Specifications

Table 3.1 shows the general specifications of the MELSEC A series PLCs.

Table 3.1 General Specifications

Item	Specifications					
Operating ambient temperature	0 to 55℃					
Storage ambient temperature	-20 to 75℃					
Operating ambient humidity	10 to 90%RH, non-condensing					
Storage ambient humidity	10 to 90%RH, non-condensing					
Vibration resistance	Conforming to *JIS B 3502, IEC 61132-2	———	Frequency	Acceleration	Amplitude	Sweep Count
		When there is Intermittent vibration	10 to 57 Hz	———	0.075 mm	10 times each in X, Y and Z axis (80 minutes)
			57 to 150 Hz	9.8m/S²	———	
		When there is continuous vibration	10 to 57 Hz	———	0.035 mm	
			57 to 150 Hz	4.9m/S²	———	
Shock resistance	Conforming to JIS B3502, IEC 61132-2 (147m/S², 3 times each in 3 directions)					
Operating environment	No corrosive gas present					
Operating height	2000 m (6562 it) or less					
Installation area	On the control board					
Over-voltage category *1	II or less					
Pollution rate *2	2 or less					

*1: Indicates the distribution area where the device is assumed to be connected, from the public power distribution network to the local machine device.
Category II is applied to the devices to which the power is supplied from a fixed equipment.
The surge resistace voltage of a rated 300 V device is 2500 V.

*2: This is an index which Indicates the occurrence rate of the conductive object in the anvironment where the device is used.
Pollution rate II indicates that only non-conductive pollution may occur with a possiblity of generating temporary conductivity due to accidental condensation.

3.2 Performance Specifications

Table 3.2 shows the performance specifications of the A1S68DAV/DAI.

Table 3.2 Performance Specifications

Item	Specifications	
	A1S68DAV	A1S68DAI
Digital input	(1) 16-bit signed binary data (2) Setting range: -2048 to 2047	(1) 16-bit signed binary data (2) Setting range: 0 to 4096
Analog output	-10 to 0 to 10 VDC (External load resistance: 2 kΩ to 1 MΩ)	4 to 20 mADC (External load resistance: 0 to 600 Ω)
I/O characteristics	Digital Input Value / Analog Output Value 2000 / 10 V 1000 / 5 V 0 / 0 V -1000 / -5 V -2000 / -10 V	Digital Input Value / Analog Output Value 4000 / 20 mA 2000 / 12 mA 0 / 4 mA
Offset/gain adjustment	None	
Maximum resolution of analog value *1	5 mV	4 μA
Overall accuracy *2 (accuracy to the maximum value)	±1.0% (±100mV)	±1.0% (±200μA)
Maximum conversion time *3	Maximum 4 ms/8 channels If the frequency of access from the PLC CPU using FROM/TO instructions is high (e.g. scan time of 5 ms or less with access every scan), this can be extended up to about 6 ms. NOTE) Times from input of digital value till specified analog value (voltage/current) is output.	
Output short protection	Provided	
Analog output points	8 channels/module	
Insulation method	Photocoupler insulation between output terminals and PLC power Between output channels: no insulation	
Number of I/O points	32 points (I/O allocation: special function module)	
Connection terminal	20 point terminal block (seven M3.5 screws)	
Applicable wire size	0.75 to 1.5 mm^2	
Applicable solderless terminal	R1.25-3, 1.25-YS3, RAV1.25-3, V1.25-YS3A	
Internal current consumption (5 VDC)	0.65 A	0.85 A
Weight	0.22kg	

*1 : The weight in hardware version "F" or earlier is 0.28kg.

How to check the hardware version
The hardware version for the A1S68DAV/DAI can be checked on the label on the front of the module.

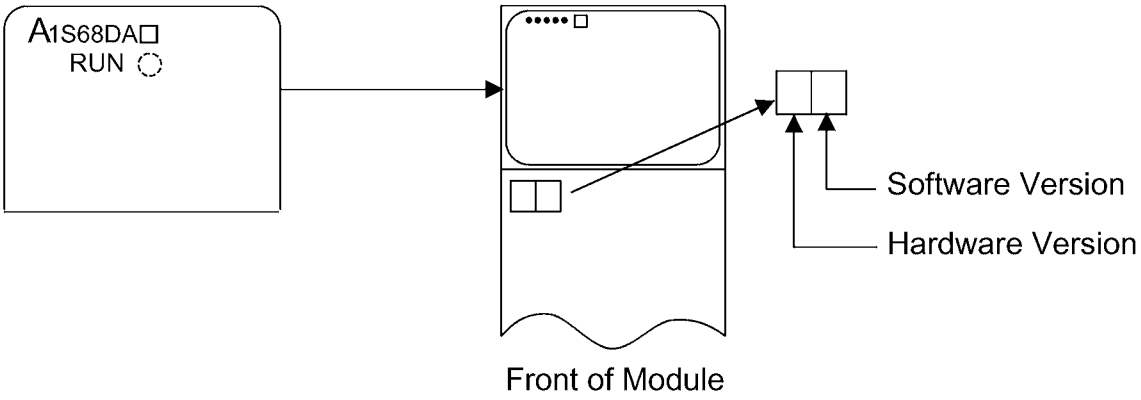

*1 Maximum resolution of analog value
The maximum resolution of analog value is the maximum variance in the analog output caused by a change in the digital value by "1".

*2 Overall accuracy
Overall accuracy is the accuracy to the maximum value of analog output.

1) Overall accuracy of the A1S68DAV is the accuracy when the output voltage setting is 10 volts.

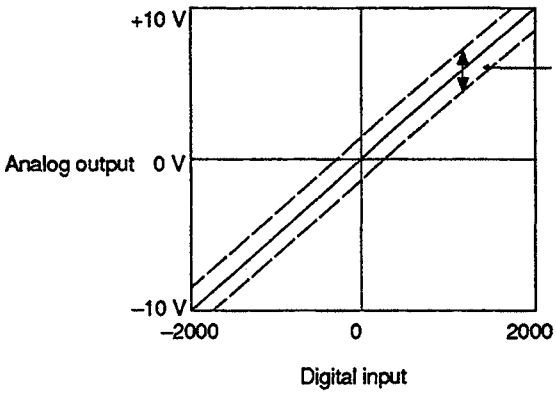

2) Overall accuracy of the A1S68DAI is the accuracy when the output voltage setting is 20 mA.

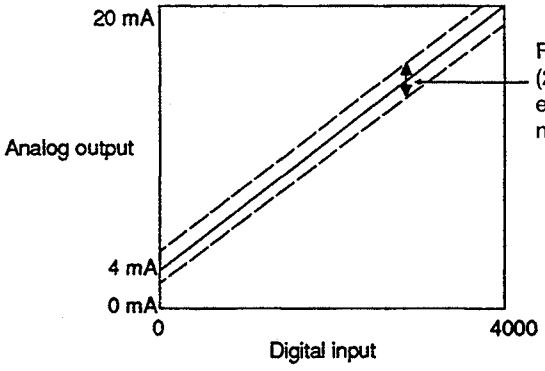

*3 Maximum Conversion speed

The conversion speed is the length of time required from the reading of a digital value written to the buffer to the output of the specified analog value after D/A conversion. The conversion speed becomes the maximum when the maximum analog value output changes to the minimum analog value output, or vice versa. The maximum speed is 4 ms.

POINT

The A1S68DAV/DAI does not have any control for adjusting the analog output value.
On delivery, the A1S68DAV/DAI is adjusted so that the correct analog output with respect to the digital input value will be output, but depending on the environment in which the module is used (temperature, etc.), it is possible that correct output in accordance with the I/O characteristics will not be achieved.
If there is some discrepancy in the analog output values obtained in response to the set digital input values, adjust by increasing or decreasing the digital value.
Note that a change of "1" in the digital value corresponds to the following amounts of change in analog output values:
• A1S68DAV: 5 mV • A1S68DAI: 4 μA

3.3 I/O Conversion Characteristics

3.3.1 I/O Conversion characteristics of the A1S68DAV

(1) I/O conversion characteristics

The I/O conversion characteristics of the A1S68DAV are shown in Fig. 3.1.

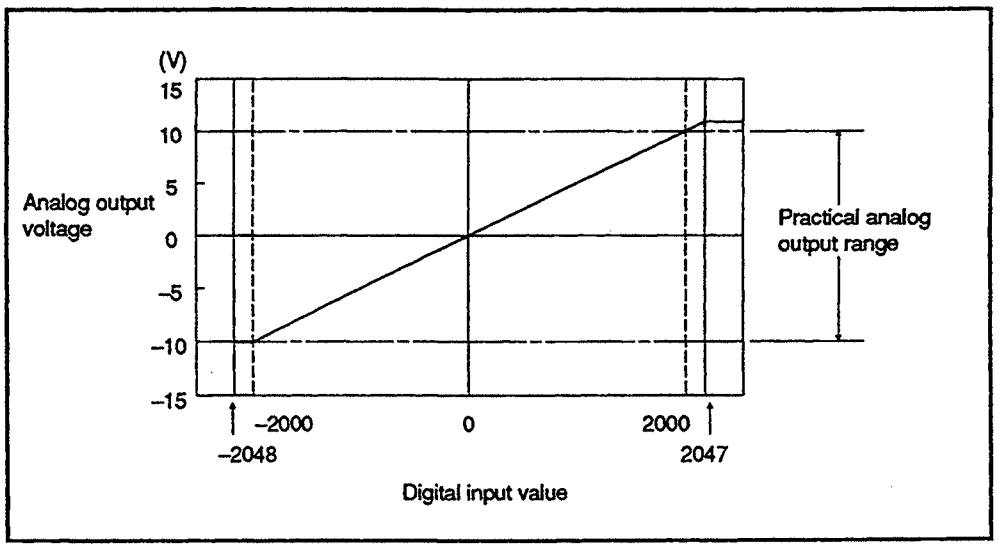

Fig. 3.1 I/O Conversion Characteristics of the A1S68DAV

(2) Determining the analog output value

Resolution of Analog output caused by digital input is obtained as shown below.

(Analog output value [V])=
(Resolution of analog value [V]) x (Digitalinput)

3.3.2 I/O conversion characteristics of the A1S68DAI

(1) I/O conversion characteristics .

The I/O conversion characteristics of the A1S68DAI are shown in Fig. 3.2.

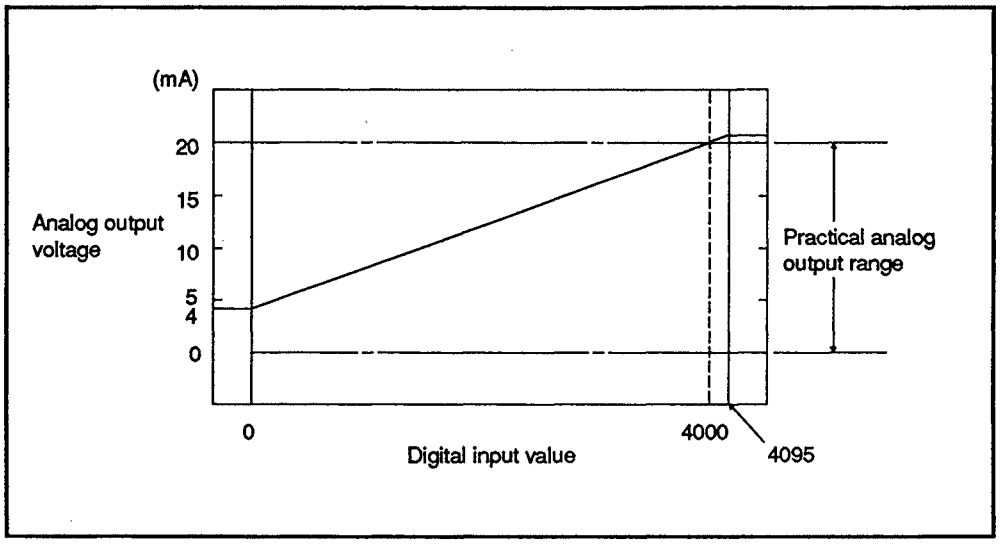

Fig. 3.2 I/O Conversion Characteristics of the A1S68DAI

(2) Determining analog output values

Resolution of Analog output caused by digital input is obtained as shown below.

(Analog output value [mA])=
(Resolution of analog value [mA]) x (Digital input) + (4 mA)

3.4 Analog Output Control Functions

3.4.1 Analog output HOLD/CLR function at STOP of CPU

This function makes it possible to select whether the last analog values output at each channel are held or cleared (0 V output in the case of the A1S68DAV, 0 or 4 mA output in the case of the A1S68DAI), when the PLC CPU goes into the STOP status, or when digital-to-analog conversion is stopped by the occurrence of an A1S68DAV/DAI error: the setting is made for all channels in a batch using the HLD/CLR terminal on the front face of the module.

3.4.2 D/A conversion execute/non-execute setting function (D/A conversion output enable flag)

This function determines if each channel outputs a D/A conversion value or 0 V/4 mA by setting a D/A conversion value output enable flag for each channel in the sequence program.
The D/A conversion time (conversion speed) is fixed disregarding of setting a D/A conversion value disable flag.

ON : D/A conversion value OFF: 0 V/4 mA

3.4.3 Analog value external output enable/disable setting function (analog output enable/disable)

This function determines if an analog value output to external devices is enabled or disabled by writing 0/1 to address 0 for each channel in the sequence program.
Select one of the functions according to the state of the analog output to be set.

1 : 0 V/0 mA 0 : (D/A conversion value or 0 V/4 mA)

3.4.4 Function combination

By combining the functions described above, it is possible to make any required setting for the analog output when the PLC CPU is in the RUN status, when it enters the STOP status, when errors occur, and when A1S68DAV/DAI errors occur, as shown in table 3.3 below.

Table 3.3 Analog Output State Setting Combinations

Setting Combination / Output Status	HOLD/CLEAR Setting (Section 3.4.1)	CLEAR				HOLD	
	D/A Conversion Output Enable Flag (Section 3.4.2)	Enable (ON)		Disable (OFF)		Enable (ON) / Disable (OFF)	
	Analog Output Enable/Disable Setting (Section 3.4.3)	Enable (0)	Disable (1)	Enable (0)	Disable (1)	Enable (0)	Disable (1)
Analog output at PLC CPU RUN		Analog value after D/A conversion of digital value set with the PLC CPU is output.	0 V/ 0 mA	0 V/4 mA	0 V/0 mA	Analog value after D/A conversion of digital value set with the PLC CPU is output.	0 V/0 mA
Analog output at PLC CPU STOP		0 V/4 mA	0 V/ 0 mA	0 V/4 mA	0 V/0 mA	Analog value before STOP is held.	0 V/0 mA
Analog output at PLC CPU error occurrence		0 V/0 mA					
Analog output status on A1S68DAV/DAI error occurrence		The upper limit of lower limit analog value is output	0 V/ 0 mA	0 V/4 mA	0 V/0 mA	The upper limit of lower limit analog value is output	0 V/0 mA
Analog output status on A1S68DAV/DAI watchdog error (X0 ON) occurrence		0 V/0 mA					

3.5 CPU I/O Signal

3.5.1 Overview of I/O signals

The A1S68DAV/DAI uses 32 points of signals for input and output respectively.

Table 3.4 gives the allocation and description of I/O signals.

X devices refer to input signals from the A1S68DAV/DAI to the PLC CPU.

Y devices refer to output signals from the PLC CPU to the A1S68DAV/DAI.

The device numbers (input/output signals) shown in the table are used when the A1S68DAV/DAI is loaded into slot 0 of the main base unit.

Table 3.4 I/O Singals

Signal Direction: A1S68DAV/DAI → PLC CPU		Signal Direction: PLC CPU → A1S68DAV/DAI	
Device No.	**Signal Description**	**Device No.**	**Signal Description**
X0	WDT error flag (A1S68DAV/DAI detection)	Y0 through YF	Unusable (used for system only)
X1	D/A conversion READY	Y10 through Y17	D/A conversion value output enable flag
X2	Error flag	Y18	Error reset flag
X3 through X1F	Unusable	Y19 through Y1F	Unusable (used for system only)

IMPORTANT

Because devices Y0 through YF and Y19 through Y1F are used in the system, they cannot be used in the sequence program.

If any of these devices are used (turned ON/OFF) in the sequence program, the functions of the A1S68DAV/DAI cannot be guaranteed.

If any of the devices Y0 through Y1F, has the same number as any of the devices X0 through X1F, that device cannot be used as an internal relay.

3.5.2 I/O signal functions

(1) WDT (watch dog timer) error flag (X0)

This flag is set when the self-diagnosis function of the A1S68DAV/DAI detects a WDT error. While the error flag is set, the D/A conversion of the A1S68DAV/DAI does not RUN (0 V/0 mA is output). If the error flag (X0) is set, a hardware malfunction may occur.

(2) D/A conversion READY signal (X1)

This signal is turned ON when the D/A conversion is ready after turning on or resetting the PLC CPU.

The D/A conversion READY signal (X1) can also be used as the buffer memory read/write interlock .

REMARK

In this manual, "D/A conversion READY" means the time when the analog output values have been output to external equipment by executing the D/A conversion with each channel.

(3) Error flag (X2)

This flag is set when an error (digital value setting error) other than the watch dog timer error occurs in the A1S68DAV/DAI.

This flag is reset when: (a) the error reset flag (Y18) is turned ON, or (b), "0" is written to the CH1 to CH8 set value check code storage areas (buffer 10 to 17).

(4) D/A conversion output enable flag (Y10 to Y17)

If any of the D/A conversion enable flags for channels 1 to 8 are set, the D/A conversion value output of the corresponding channels is set to "enabled".

If a D/A conversion value output needs to be set to "disable", reset the corresponding D/A conversion enable flag.

Y10 : D/A conversion value output enable flag for channel 1

Y11 : D/A conversion value output enable flag for channel 2

⋮

Y17 : D/A conversion value output enable flag for channel 8

(5) Error reset signal (Y18)

Turning ON the error reset signal (Y18) resets the error flag (X2), and clears the check code stored in the setting value check code storage area (addresses 10 to 17) of the buffer memory. It is replaced by "0".

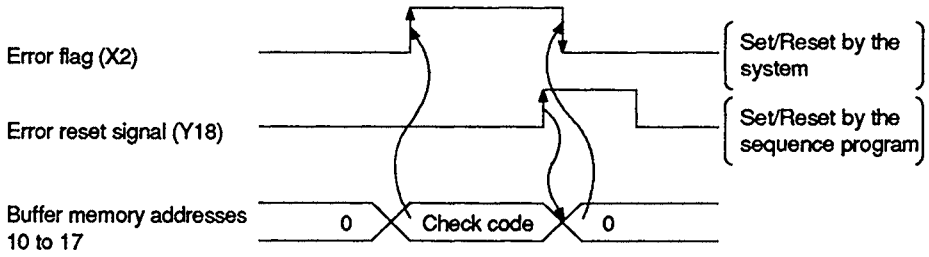

POINT

The I/O allocation numbers of the A1S68DAV/DAI mentioned in this manual are those when the A1S68DAV/DAI is loaded in slot No.0 of the main base unit.

3.6 Buffer Memory

The A1S68DAV/DAI has a butter memory (not battery backed) for data communication with the PLC CPU.

The buffer memory assignment and data maps are indicated below.

3.6.1 Buffer memory assignment

Address 2 (Decimal)		Default Value	Relevant Section
0	Analog output enable/ disable channel	0000H (all channels enabled)	Section 3.6.2
1	CH.1 digital value	0	Section 3.6.3
2	CH.2 digital value		
3	CH.3 digital value		
4	CH.4 digital value		
5	CH.5 digital value		
6	CH.6 digital value		
7	CH.7 digital value		
8	CH.8 digital value		
9		—	—
10	CH.1 set value check code	0	Section 3.6.4
11	CH.2 set value check code		
12	CH.3 set value check code		
13	CH.4 set value check code		
14	CH.5 set value check code		
15	CH.6 set value check code		
16	CH.7 set value check code		
17	CH.8 set value check code		

Fig. 3.3 Buffer Memory Assignment

3.6.2 Analog output enable/disable channel area (Address 0H)

(1) Defines output enable/disable for the converted analog value per channel.

(2) All channels are enabled for output when:

(a) Power is switched on; or

(b) PLC CPU is reset.

(3) Output enable/disable is defined by 0/1.

(a) Enable 0

(b) Disable 1

(4) The analog output enable/disable channel area data map is shown below:

b15	b14	b13	b12	b11	b10	b9	b8	b7	b6	b5	b4	b3	b2	b1	b0
								CH.8	CH.7	CH.6	CH.5	CH.4	CH.3	CH.2	CH.1
Ignored															

Fig. 3.4 Analog Output Enable/Disable Channel Area Data Map

3.6.3 CH.1 to CH.8 digital value area (Addresses 1H to 8H)

(1) Write digital values to this area from the PLC CPU for D/A conversion.

(2) Digital values of all channels are set to 0 if:

(a) D/A conversion READY flag (X1) is ON after power on; or

(b) D/A conversion READY flag (X1) is switched ON after the PLC CPU is reset.

(3) The digital values that can be set are 16-bit signed binary values within the range indicated in table 3.5.
If a value outside the valid setting range is set, D/A conversion is performed in accordance with the "digital value for D/A conversion when values outside the specified range are set" indicated in table 3.5 and the check code is stored in the set value check code storage area (addresses 10 to 17).

Table 3.5 The Setting Range of Digital Value

Module	Setting Range	Digital Value for D-A Conversion when Values Outside the Special Ranges are Set.
A1S68DAV	–2048 to 2047 (–2000 to 2000 : for guaranteed operation)	2048 or above : 2047 –2049 or below : –2048
A1S68DAI	0 to 4095 (0 to 4000 : for guaranteed operation)	4096 or above : 4095 –1 or below : 0

3.6.4 CH.1 to CH.8 set value check code storage area (Addresses 10H to 17H)

(1) Used to check whether the set digital values are within or out of the setting range.

(2) The corresponding check code in Table 3.6 is stored if a digital value out of the setting range of digital value resolution is set.

Table 3.6 Check Code List

Check Code	Description
000FH	A digital value over the setting range was set.
00F0H	A digital value below the setting range was set.
00FFH	Digital values over and below the setting range resolution were set. For example, the 00FFH check code is stored if a digital value exceeding the valid range is written, and then, without the check code being reset, a digital value that falls short of the valid range is written.

(3) Any check code stored once is not reset even though the corresponding set value is corrected to a valid value (within the setting range).

The check code should be reset by switching the error reset signal(Y18) ON or by writing "0" in each storage area.

POINT

The error flag(X2) is set ON to indicate that a check code has been stored to the set value check code area.

4. PRE-OPERATION SETTINGS AND PROCEDURES

4.1 Pre-Operation Procedure

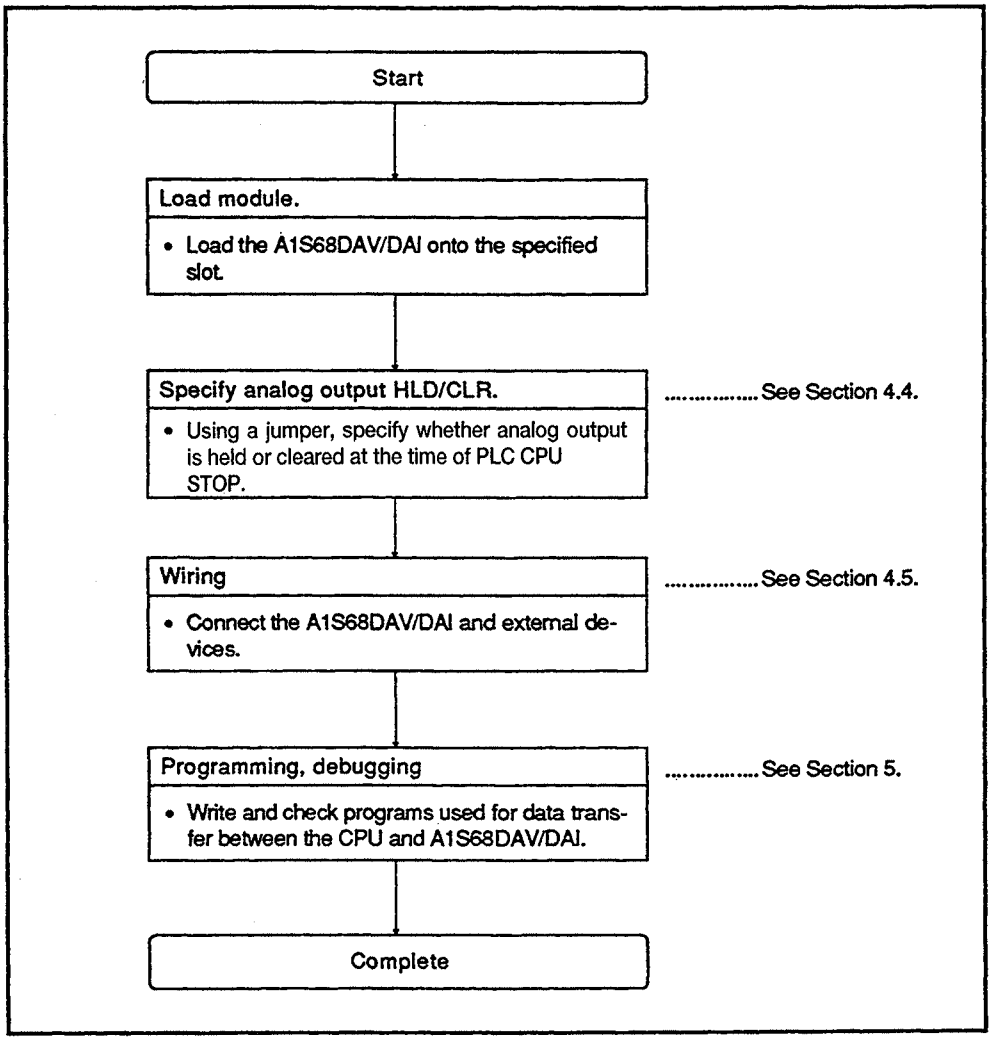

Fig. 4.1 Pre-Operation Procedure

4.2 Cautions on Handling

This section gives the cautions on handling the A1S68DAV/DAI.

(1) The case of the A1S68DAV/DAI is made of resin: do not drop it or subject it to strong impact.

(2) Do not remove the printed circuit board from the case. This could cause failure.

(3) Make sure that no wire offcuts or other debris enters the top of the module during wiring. If anything does enter the module, remove it.

(4) Tighten the module mounting and terminal screws as specified below.

Screw	Tightening Touque Range
Module mounting screw (M4 screw)	78 to 118 N·cm
Terminal block trminal screws (M3.5 screws)	59 to 88 N·cm
Terminal block mounting screws (M4 screws)	78 to 118 N·cm

(5) When mounting the A1S68DAV/DAI to the base unit, make sure that the module fixing projection is inserted in the module fixing hole before securing the module with the module mounting screw.
When removing the module, be sure to remove the module mounting screw before attempting to disengage the module fixing projection from the module fixing hole.

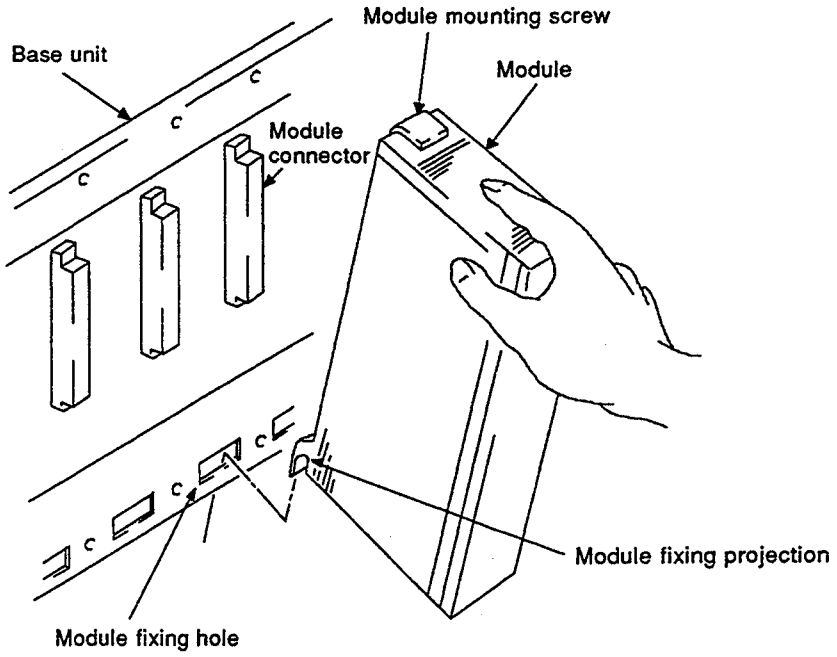

4.3 Nomenclature

This section gives the name of each part of the A1S68DAV/DAI.

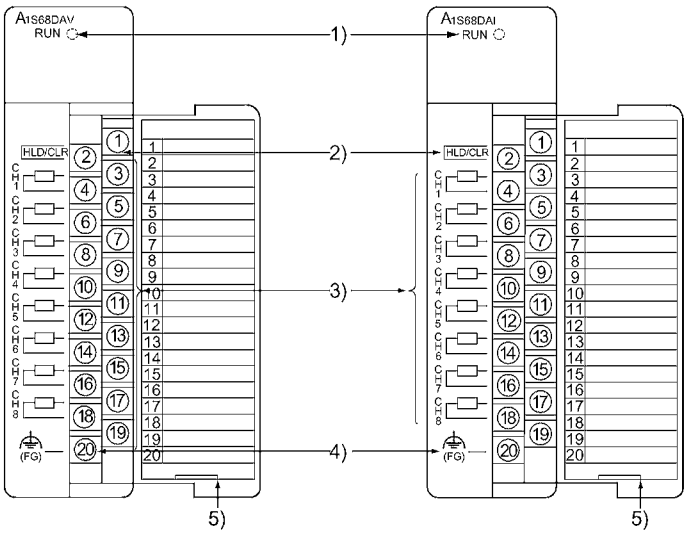

No.	Name and Appearance	Description
(1)	"RUN" LED RUN ○	LED that indicates the operating status of the A1S68DAV/DAI. On : Normal operation Off : • 5 VDC is not being supplied to the A1S68DAV/DAI. • An A1S68DAV/DAI WDT error has occurred. • The PLC CPU has detected an error and stopped operation. Flashing : A write data error has occurred.
(2)	Analog output HLD/CLEAR setting terminals (terminal Nos. 1, 2) 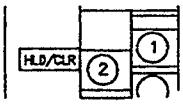	Terminals used to set whether the analog outputs before the STOP are held (HLD) or cleared (CLR) when a PLC CPU STOP occurs. (see Section 4.4) • When terminals No.1 and No.2 are not shorted ..... CLR • When terminals No.1 and No.2 are shorted ..... HLD
(3)	Analog output terminals (CH.1 to CH.8) 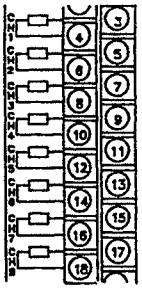	Terminals that output the D/A converted values to external destinations. <table><tr><th>Channel</th><th>Terminal No.</th><th>Channel</th><th>Terminal No.</th></tr><tr><td>1</td><td>3, 4</td><td>5</td><td>11, 12</td></tr><tr><td>2</td><td>5, 6</td><td>6</td><td>13, 14</td></tr><tr><td>3</td><td>7, 8</td><td>7</td><td>15, 16</td></tr><tr><td>4</td><td>9, 10</td><td>8</td><td>17, 18</td></tr></table>
(4)	FG terminal (terminal No. 20) 	Frame ground terminal
(5)	Code sheet	For filling out the applications of the terminals

Remark

In hardware version "F" or earlier, the RUN LED is positioned 6mm left from the one of hardware version "G" or later.

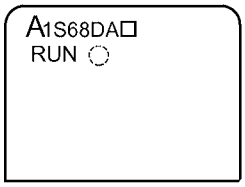

Hardware version
"F" or earlier

4.4 HOLD/CLEAR Setting of Analog Output

This section explains how to define a HOLD/CLEAR setting of analog output when the PLC CPU is in the STOP mode.

(1) Use the HLD/CLR terminal (on the front of the A1S68DAV/DAI module) to define the HOLD/CLEAR setting of analog output.

Table 4.1 describes the settings and their states.

Table 4.1 HOLD/CLEAR Setting

Analog Output Setting	State of HLD/CLR Terminal (Between Terminal Nos. 1 and 2)
HOLD	Connected
CLEAR	Not connected

The original(factory-set) analog output state is CLEAR(disconnected).

(2) The analog output state by HOLD/CLEAR setting varies with settings of the D/A conversion value output enable flag (see Section 3.5.2(4)) and the analog output enable/disable state (see Section 3.6.2).

Table 3.3 shows the analog output states for settings of the D/A conversion value output enable flag and the analog output enable/disable state. It also shows the analog output state when the CPU is in the RUN mode.

4.5 Wiring

4.5.1 Wiring instructions

In order to get optimum performance from the functions of the A1S68DAV/DAI, and to ensure reliable system operation, the external wiring must have minimum susceptibility to noise.

The following cautions therefore apply when wiring.

(1) Use separate cables for AC voltages and the external output signals of the A1S68DAV/DAI so that the signal lines are not affected by surge and induction from the AC lines.

Do not bundle the extermal wiring together with main circuit or high-voltage lines, or load-bearing wires other than those of the PLC.
This will increase susceptibility to noise and the effects of surges and induction.

(3) Ground the shielding of shielded wires and shielded cables at one point.

4.5.2 Connection of A1S68DAV/DAI and external devices

(1) Connection Example of A1S68DAV and External Devices

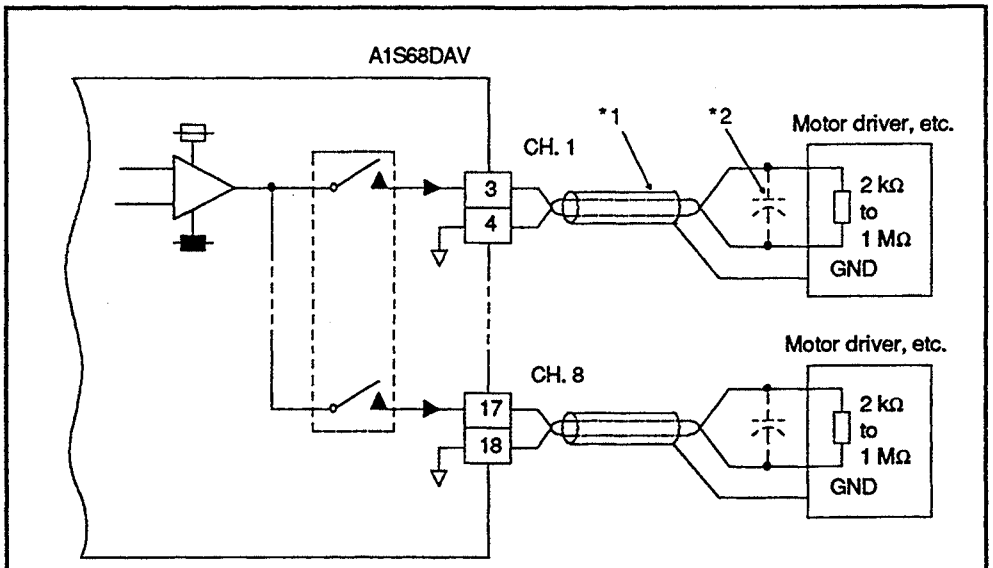

*1 : Use two-core shielded wiring (twisted).

*2 : If noise or ripples is generated by the external wiring, connect a 0.1 to 0.47 μF (25V or more voltage resistance parts) capacitor to the input terminal of the external devise.

Fig. 4.2 Connection Example of A1S68DAV and External Devices

(2) Connection Example of A1S68DAI and External Devices

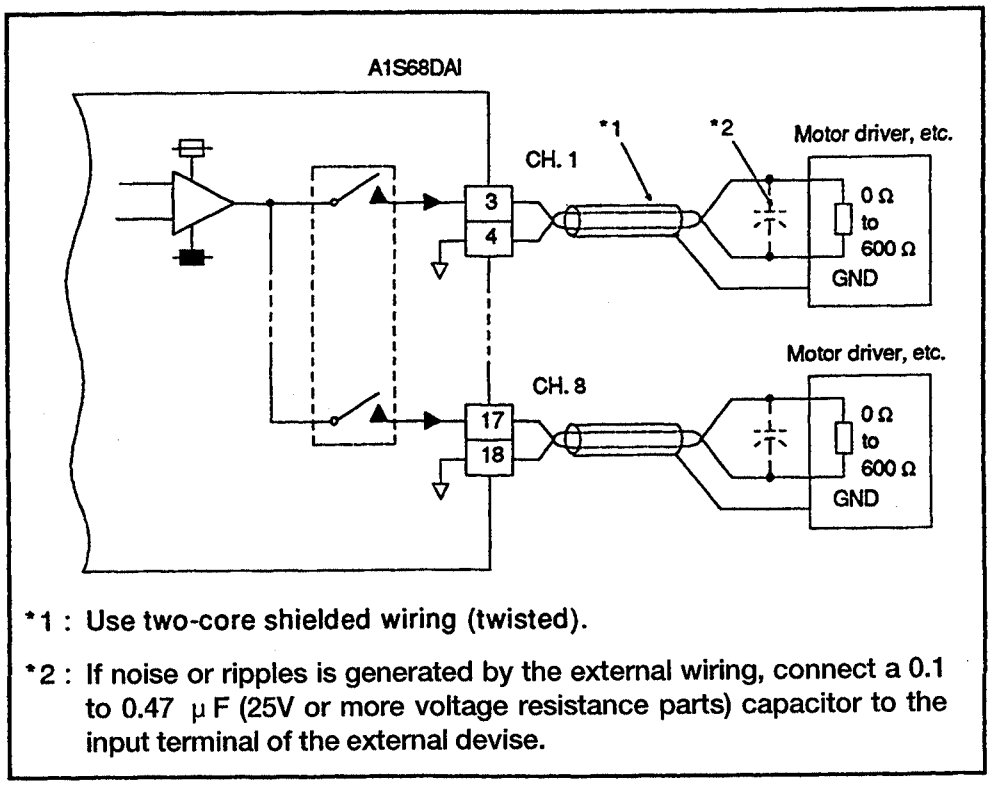

*1 : Use two-core shielded wiring (twisted).

*2 : If noise or ripples is generated by the external wiring, connect a 0.1 to 0.47 μF (25V or more voltage resistance parts) capacitor to the input terminal of the external devise.

Fig. 4.3 Connection Example of A1S68DAI and External Devices

POINT

To connect A1S68DAI with an external device having common I-(COM), isolate each channel in the system as shown in the example below.
If the channels are not isolated with each other, the current is not output correctly.

■Example of inter-channel isolation system using a current type inter-channel isolation adaptor

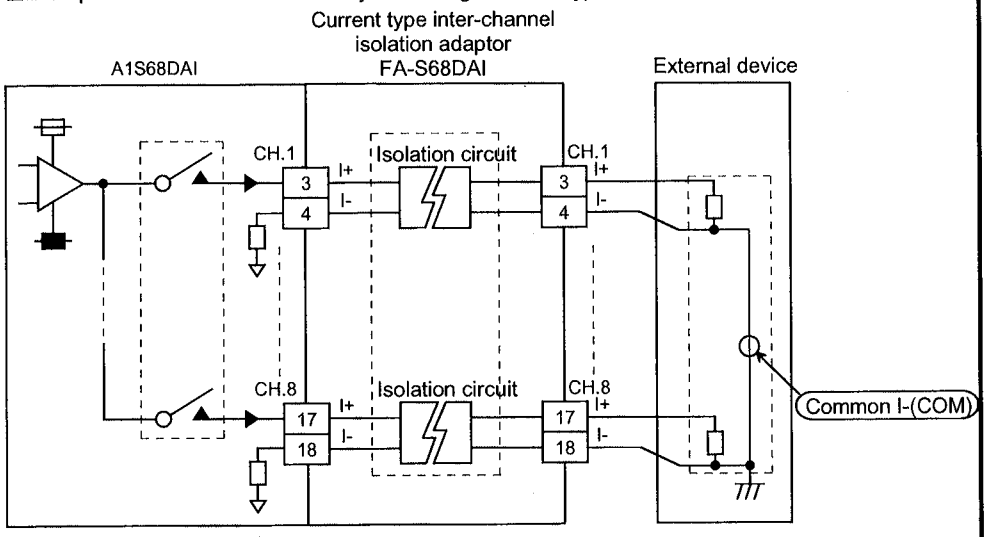

The current type inter-channel isolation adaptor is specified below.

Part name	Model	Manufacturer
Current type inter-channel isolation adaptor	FA・S68DAI	Mitsubishi Electric Engineering Co., Ltd.

5. PROGRAMMING

This section explains the programming procedure for use of the A1S68DAV/DAI.
When applying any of the program examples introduced in this chapter to the actual system, full verify that there are no problems in the controllability of the target system.

5.1 Programming Procedure

Program data transfer between the PLC CPU and A1S68DAV/DAI as indicated in Fig. 5.1.

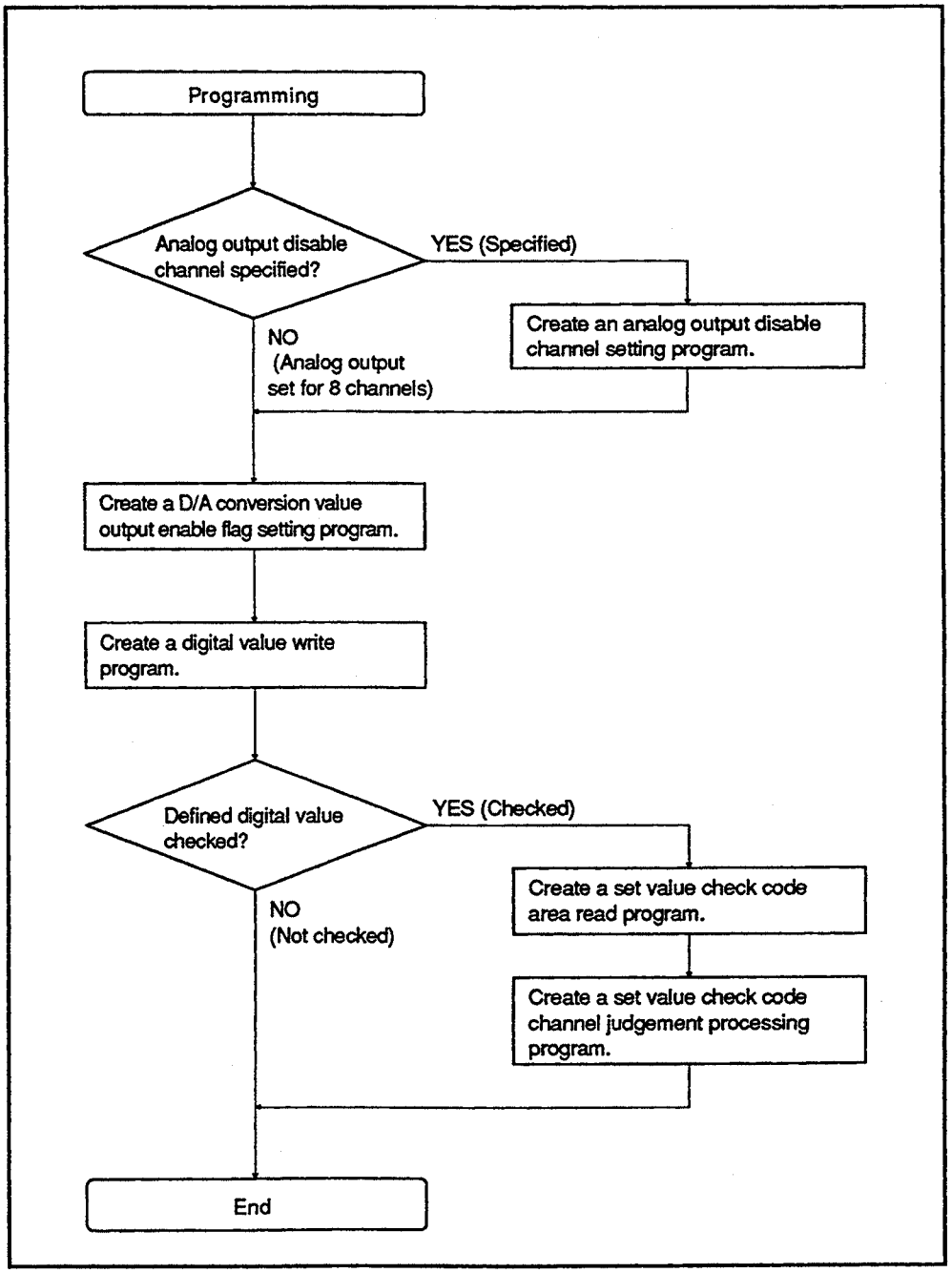

Fig. 5.1 Programming Procedure

5.2 Cautions on Programming

This section gives the cautions on creating a sequence program for the A1S68DAV/DAI.

(1) If the frequency of accessing in accordance with FROM/TO instructions from the PLC CPU is high, the D/A conversion time may be delayed by up to 6 ms.
In order to execute D/A conversion processing without a delay, keep accessing by means of FROM/TO instructions to a minimum.

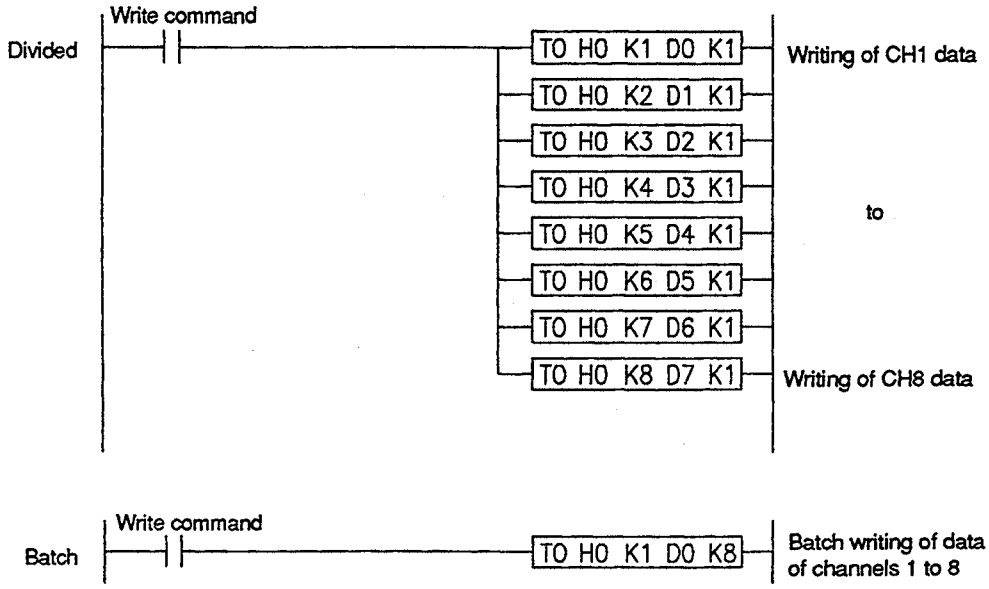

Explanation:

When writing a program to write the data of 8 channels, writing a program like that marked "Batch" above, in which the data of all the channels is written in a batch by one FROM/TO instruction, rather than using 8 TO instructions as in the program marked "Divided" above, saves delays in A1S68DAV/DAI processing.

5.3 Basic Read/Write Program

(1) Reading from the A1S68DAV/DAI
.....FROM, FROMP, DFRO, DFROP instructions

Format

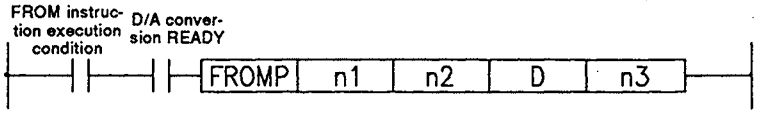

Code	Description	Usable Devices
n1	The most significant two digits when the head I/O number allocated to the A1S68DAV/DAI is expressed as a 3-digit hexadecimal number	K, H
n2	Head address of the buffer memory in which the data is stored	K, H
D	Head number of the devices in which the read data is stored	T, C, D, W, R
n3	Number of words of read data	K, H

Example

The I/O of the A1S68DAV/DAI is allocated to X30 to 4F and Y30 to 4F, and 1 word of data is read from buffer memory address 10 to D0.

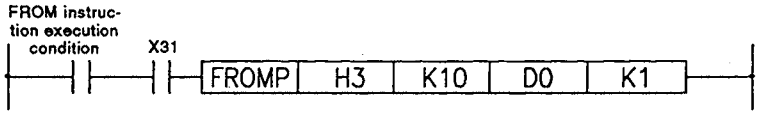

(2) Writing to the A1S68DAV/DAI .... TO, TOP, DTO, DTOP instructions

Format

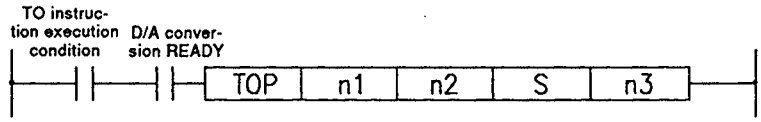

Code	Description	Usable Devices
n1	The most significant two digits when the head I/O number allocated to the A1S68DAV/DAI is expressed as a 3-digit hexadecimal number	K, H
n2	Head address of the buffer memory in which the data is stored	K, H
S	Head number of the devices in which the read data is stored, or constant	T, C, D, W, R, K, H
n3	Number of words of write data	K, H

Example

The I/O of the A1S68DAV/DAI is allocated to X60 to 7F and Y60 to 7F, and 1 word of data is written to buffer memory address 0.

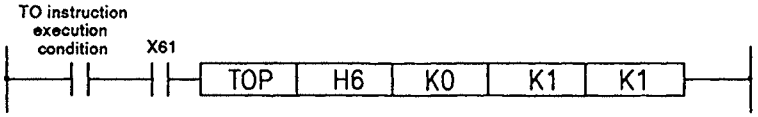

5.4 Sample Program

The example program shown here writes the value set with the BCD digital switches to the digital value setting area for channel 1 of the A1S68DAV/DAI, and - if an error relating to the digital value occurs - reads the check code from the set value check code area (buffer memory address 10) and outputs it to Y70 to Y72.

Programming conditions

(1) System configuration

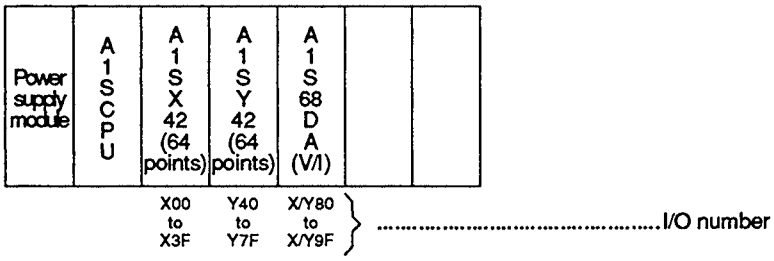

(2) Initial settings

(a) Analog output enable channel CH.1

(3) Device for user

(a) Analog output enable/disable channel setting signal X0

(b) Digital value write signal X1

(c) Digital value setting (BCD, 4 digits) ..... X30 to X3F

(d) Error reset signal X2

(e) Digital value storage register D0

(f) Check code storage register D1

(g) Digital value setting error output Y70

(h) Error output when digital value indicated below or higher is set Y71
• A1S68DDAV: 2048 • A1S68DAI: 4097

(i) Error output when digital value indicated below or lower is set Y72
• A1S68DAV: -2049 • A1S68DAI: -1

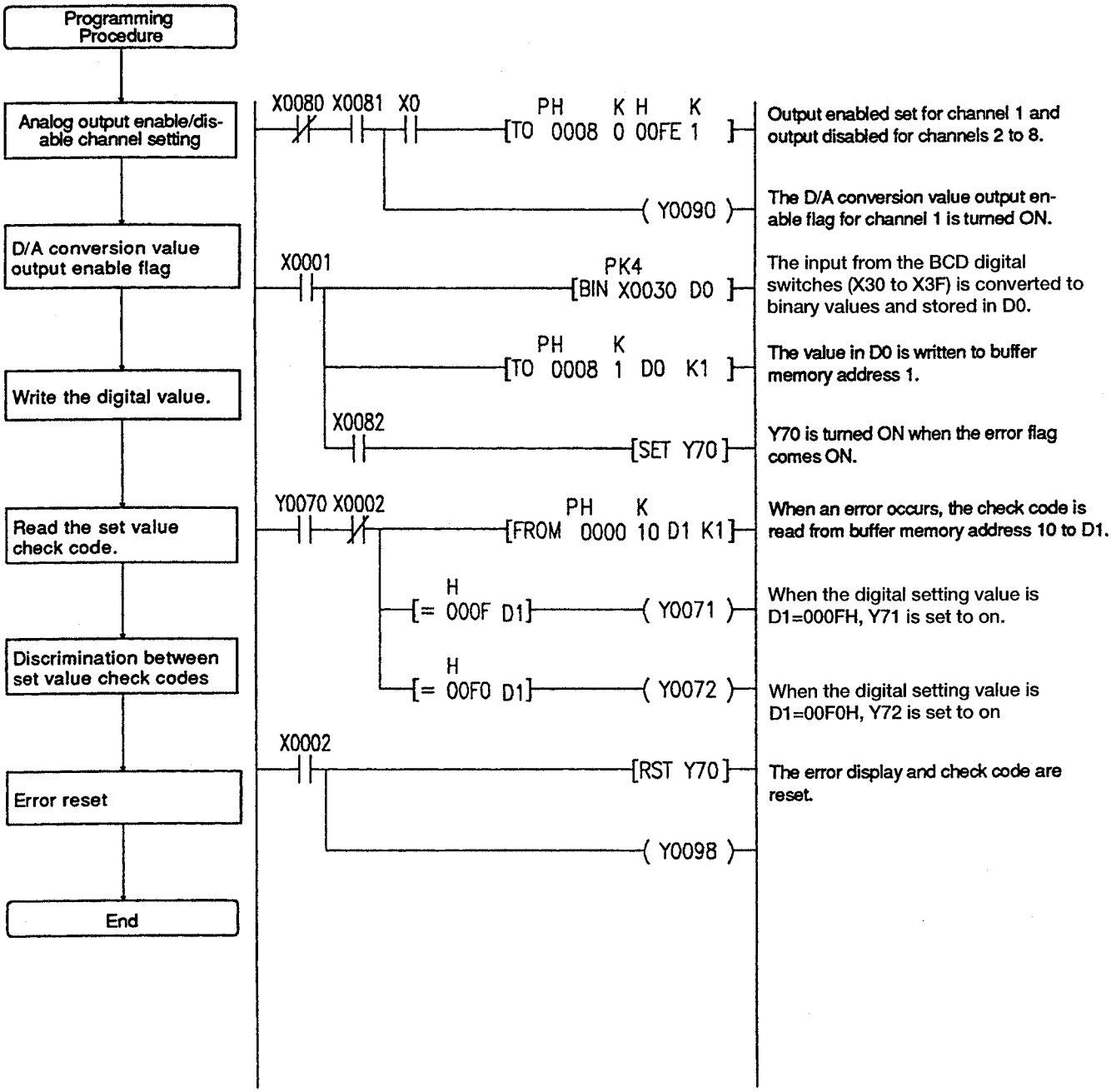
Programming Procedure
Analog output enable/disable channel setting
D/A conversion value output enable flag
Write the digital value.
Read the set value check code.
Discrimination between set value check codes
Error reset
End
X0080 X0081 X0
PH K H K
[TO 0008 0 00FE 1]
(Y0090)
Output enabled set for channel 1 and output disabled for channels 2 to 8.
The D/A conversion value output enable flag for channel 1 is turned ON.
X0001
PK4
[BIN X0030 D0]
PH K
[TO 0008 1 D0 K1]
The input from the BCD digital switches (X30 to X3F) is converted to binary values and stored in D0.
The value in D0 is written to buffer memory address 1.
X0082
[SET Y70]
Y70 is turned ON when the error flag comes ON.
Y0070 X0002
PH K
[FROM 0000 10 D1 K1]
When an error occurs, the check code is read from buffer memory address 10 to D1.
H
[= 000F D1]
(Y0071)
When the digital setting value is D1=000FH, Y71 is set to on.
H
[= 00F0 D1]
(Y0072)
When the digital setting value is D1=00F0H, Y72 is set to on
X0002
[RST Y70]
(Y0098)
The error display and check code are reset.

6. TROUBLESHOOTING

Program conditions and troubleshooting diagnoses for the A1S68DAV/DAI are given below. For information on the PLC CPU , see the corresponding PLC CPU User's Manual.

6.1 When the RUN LED Flashes or Goes OFF

(1) When the RUN LED goes OFF:

Items to Check	Corrective Actions
Has an error occurred in the PLC CPU module?	Refer to the appropriate User's Manual for error information, and correct the error.
Is the power supply module (5 VDC) installed to the base unit not getting enough current?	Recalculate the total amperage for the PLC CPU, I/O module, and special function module installed to the base unit, and replace the power supply module based on that calculation.
Is the A1S68DAV/DAI WDT error flag set?	Processing executed in accordance with Section 6.6.

(2) When the RUN LED flashes:

Items to Check	Corrective Actions
Has a digital value outside the set range been written?	Clear the set value check code storage area using the error reset flag.

6.2 When the Analog Value is 0 V/0 mA

(1) When the values of all channels are 0 V/0 mA:

Items to Check	Corrective Actions
Is the RUN LED of the A1S68DAV/DAI turned OFF?	Follow procedures in Section 6.1.
Is the WDT error flag set?	Follow procedures in Section 6.6.
Is the D/A conversion ready flag set?	Follow procedures in Section 6.7.
Is the channel set as the analog output enabled/disabled channel?	Set the channel to be used as the analog output enabled/disabled channel.
Is a digital value written to the digital value setting area (addresses 1 to 8) in the buffer?	Write the digital value to the channel used for D/A conversion (see Sections 3.6.3 and 5.4.).

6.3 When the Analog Value is 4 mA (When Using an A1S68DAI)

Items to Check	Corrective Actions
Is the RUN key switch of the PLC CPU module set to a position other than "RUN"?	Set the switch to the RUN position.
Is the D/A conversion output enable flag of each channel OFF?	Turn ON the D/A conversion output enable flag of the channel to be used.
Is the digital value setting area (addresses 1 to 8) of the buffer memory?	Write the digital values of the channel to be converted from digital to analog. (Refer to Sections 3.6.3 and 5.4)

6.4 Analog Values are Output though the CPU Module is set to STOP

Items to Check	Corrective Actions
Are the HLD/CLR setting terminals shorted(hold)?	Open the HLD/CLR setting terminals.

6.5 When Digital and Analog Values do not Match

(1) If the analog value changes when the digital value is changed:

Items to Check	Corrective Actions
Is the wiring between the A1S68DAV/DAI and external devices correct?	Check the wiring between the A1S68DAV/DAI and external devices.
Is the digital value written into the digital value setting area of the buffer memory (addresses 1 to 8) correct?	Write the correct digital values into the buffer memory addresses corresponding to the relevant channels.

(2) If the analog value does not change when the digital value is changed:

Items to Check	Corrective Actions
Is the RUN key switch of the PLC CPU set to a position other than "RUN"?	Set the switch to the RUN position.
Is the digital value written into the digital value setting area (addresses 1 to 8) of the buffer memory?	Write the digital value of the channel in which D/A conversion is executed to the digital value setting area (see Sections 3.6.3 and 5.4).

6.6 The WDT Error Flag (X0) Comes ON

Item to Check	Corrective Actions
Does the WDT error flag go OFF when the PLC CPU is reset?	Check if there is a fault in the transmission system, and check if the system is affected by noise.

6.7 The D/A Conversion READY Flag (X1) Fails to Come ON

Items to Check	Corrective Actions
Has a PLC CPU error occurred?	Take the appropriate corrective action for the error by referring to the user's manual for the PLC CPU.
Is there an I/O number error?	Confirm/correct the I/O number.

6.8 The Error Flag (X2) Comes ON

Item to Check	Corrective Actions
Is a value other than "0" set in the set value check code storage area (addresses 10 to 17) of the buffer memory?	Find out why a digital value outside the set range has been written to the digital value setting area of the channel that corresponds to the non-zero set value check code storage area. Then, take corrective action and use the error reset flag to clear the set value check code storage area.

POINT

If all of the troubleshooting checks do not show problems, or if the prescriped corrective measures do not solve the problem, the A1S68DAV/DAI hardware might be faulty.

Consult a Mitsubishi representative.

APPENDICES

APPENDIX 1 COMPARISON WITH OTHER D/A CONVERTER MODULES

Table 1.1 shows the comparison of A1S68DAV/DAI and other D/A converter modules.

Table 1 Comparison List

Item		Specifications			
		A1S68DAV	A1S68DAI	A1S62DA	
				Voltage Output	Current Output
Digital input		-2048 to 2047	0 to 4096	-4000 to 4000 -8000 to 8000 -12000 to 12000 (Varies according to the resolution setting)	0 to 4000 0 to 8000 0 to 12000 (Varies according to the resolution setting)
Analog output		-10 to 0 to 10 VDC (External load resistance: 2 kΩ to 1 MΩ)	4 to 20 mADC (External load resistance: 0 to 600 Ω)	-10 to 0 to 10 VDC (External load resistance: 2 kΩ to 1 MΩ)	0 to 20 mADC (External load resistance: 0 to 600 Ω)
Maximum resolution		5 mV	4 μA	2.5 mV 1.25 mV 0.83 mV (Varies according to the resolution setting)	5 μA 2.5 μA 1.7 μA (Varies according to the resolution setting)
Overall accuracy (Accuracy with respect to the maximum value)		±1.0 %			
Number of channels of analog output		8 channels/module		2 channels/module	
Max. Conversion time		Within 4 ms/8 channels		Within 25 ms/2 channels	
Offset/Gain adjustment		None		Provided (adjustable by using test switches instead of offset/gain adjustment knobs)	
Insulation method	Between output terminal and PC power supply	By Photocoupler			
	Between channels	Not insulated			
Output short protection		Provided			
Number of occupied I/O points		32 points			
Terminal block for connection		20-point terminal block			
Applicable wire size		0.75 to 1.5 mm^2			
Applicable solderless terminals		R1.25-3, 1.25-YS3, RAV1.25-3, V1.25-YS3A			
Internal current consumption (5 VDC)		0.65 mA	0.85 mA	0.8 A	
Weight (kg)		0.28		0.32	
Outside dimensions (mm)[in]		130[5.12](H) x 34.5[1.36](W) x 93.6[3.69](D)			

APPENDIX 2 OUTSIDE DIMENSIONS

2.1 A1S68DAV

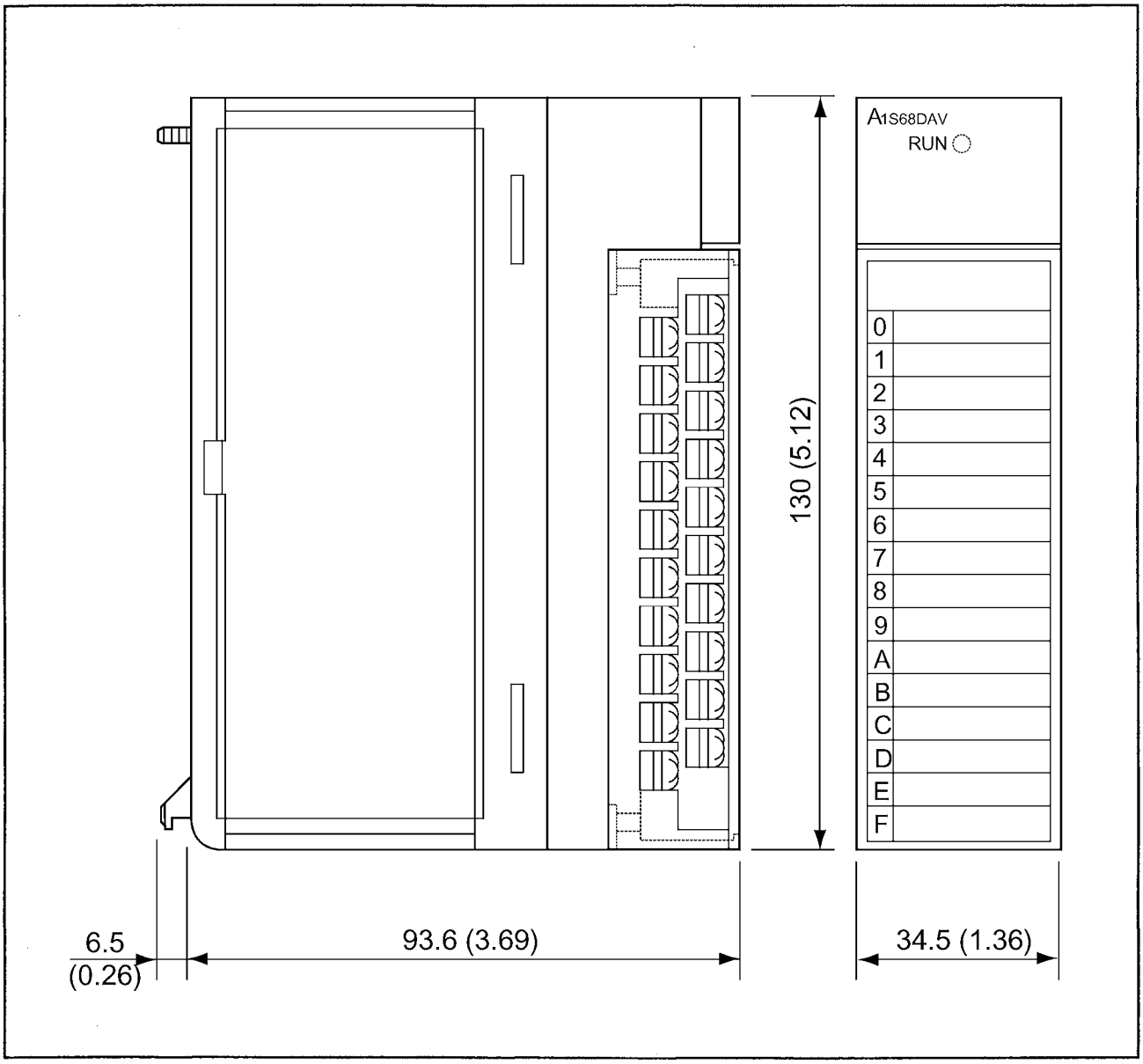

Unit: mm(inch)

2.2 A1S68DAI

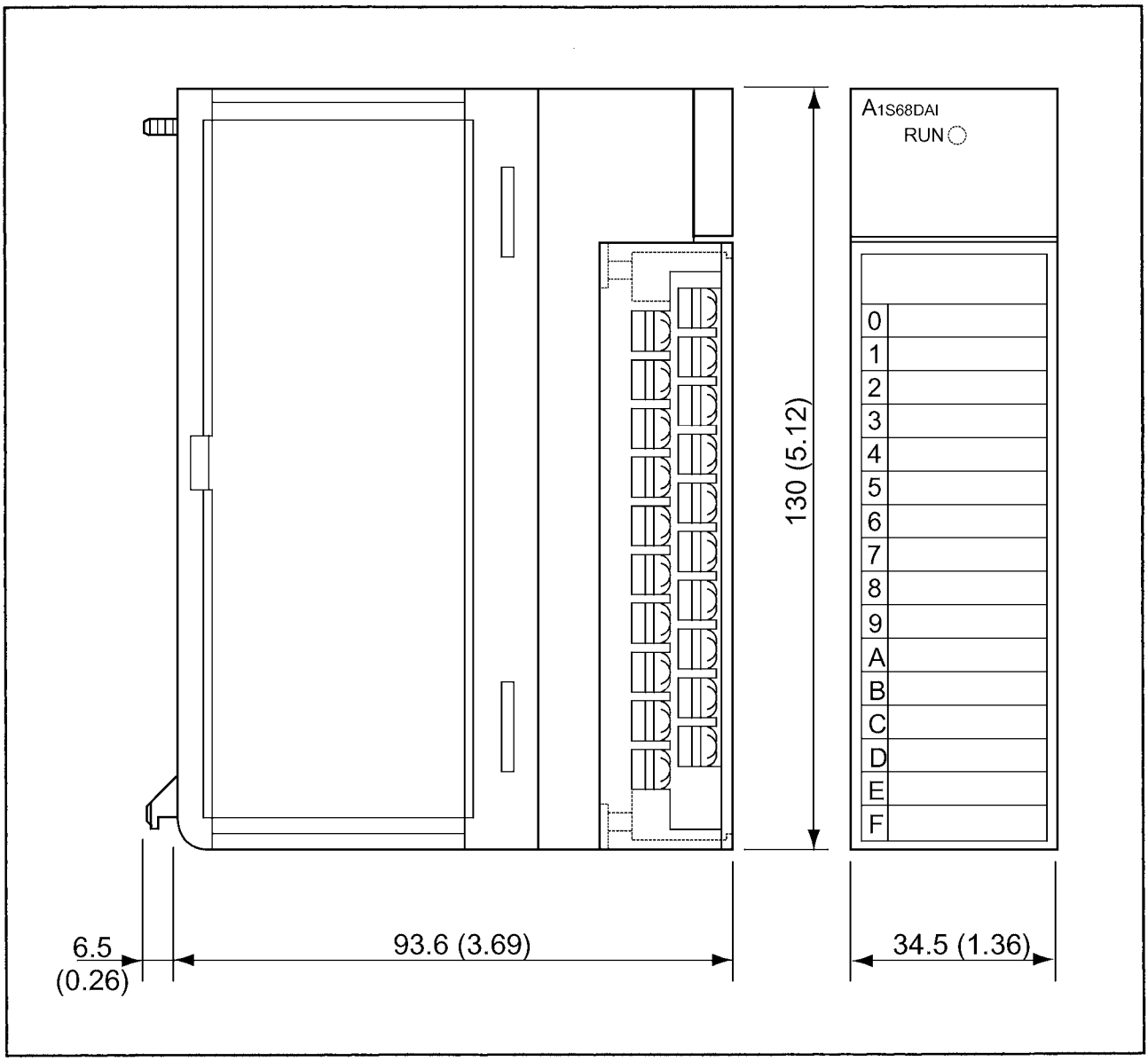

Unit: mm(inch)

APPENDIX 3 CODE SHEET

Front

0	
1	
2	
3	
4	
5	
6	
7	
8	
9	
A	
B	
C	
D	
E	
F	

Back

1	
2	
3	
4	
5	
6	
7	
8	
9	
10	
11	
12	
13	
14	
15	
16	
17	
18	
19	
20	
84545670–001	

WARRANTY

Please confirm the following product warranty details before using this product.

1. Gratis Warranty Term and Gratis Warranty Range

If any faults or defects (hereinafter "Failure") found to be the responsibility of Mitsubishi occurs during use of the product within the gratis warranty term, the product shall be repaired at no cost via the sales representative or Mitsubishi Service Company.
However, if repairs are required onsite at domestic or overseas location, expenses to send an engineer will be solely at the customer's discretion. Mitsubishi shall not be held responsible for any re-commissioning, maintenance, or testing on-site that involves replacement of the failed module.

[Gratis Warranty Term]

The gratis warranty term of the product shall be for one year after the date of purchase or delivery to a designated place.
Note that after manufacture and shipment from Mitsubishi, the maximum distribution period shall be six (6) months, and the longest gratis warranty term after manufacturing shall be eighteen (18) months. The gratis warranty term of repair parts shall not exceed the gratis warranty term before repairs.

[Gratis Warranty Range]

(1) The range shall be limited to normal use within the usage state, usage methods and usage environment, etc., which follow the conditions and precautions, etc., given in the instruction manual, user's manual and caution labels on the product.
(2) Even within the gratis warranty term, repairs shall be charged for in the following cases.
1. Failure occurring from inappropriate storage or handling, carelessness or negligence by the user. Failure caused by the user's hardware or software design.
2. Failure caused by unapproved modifications, etc., to the product by the user.
3. When the Mitsubishi product is assembled into a user's device, Failure that could have been avoided if functions or structures, judged as necessary in the legal safety measures the user's device is subject to or as necessary by industry standards, had been provided.
4. Failure that could have been avoided if consumable parts (battery, backlight, fuse, etc.) designated in the instruction manual had been correctly serviced or replaced.
5. Failure caused by external irresistible forces such as fires or abnormal voltages, and Failure caused by force majeure such as earthquakes, lightning, wind and water damage.
6. Failure caused by reasons unpredictable by scientific technology standards at time of shipment from Mitsubishi.
7. Any other failure found not to be the responsibility of Mitsubishi or that admitted not to be so by the user.

2. Onerous repair term after discontinuation of production

(1) Mitsubishi shall accept onerous product repairs for seven (7) years after production of the product is discontinued. Discontinuation of production shall be notified with Mitsubishi Technical Bulletins, etc.
(2) Product supply (including repair parts) is not available after production is discontinued.

3. Overseas service

Overseas, repairs shall be accepted by Mitsubishi's local overseas FA Center. Note that the repair conditions at each FA Center may differ.

4. Exclusion of loss in opportunity and secondary loss from warranty liability

Regardless of the gratis warranty term, Mitsubishi shall not be liable for compensation of damages caused by any cause found not to be the responsibility of Mitsubishi, loss in opportunity, lost profits incurred to the user by Failures of Mitsubishi products, special damages and secondary damages whether foreseeable or not , compensation for accidents, and compensation for damages to products other than Mitsubishi products, replacement by the user, maintenance of on-site equipment, start-up test run and other tasks.

5. Changes in product specifications

The specifications given in the catalogs, manuals or technical documents are subject to change without prior notice.

6. Product application

(1) In using the Mitsubishi MELSEC programmable controller, the usage conditions shall be that the application will not lead to a major accident even if any problem or fault should occur in the programmable controller device, and that backup and fail-safe functions are systematically provided outside of the device for any problem or fault.
(2) The Mitsubishi programmable controller has been designed and manufactured for applications in general industries, etc. Thus, applications in which the public could be affected such as in nuclear power plants and other power plants operated by respective power companies, and applications in which a special quality assurance system is required, such as for Railway companies or Public service purposes shall be excluded from the programmable controller applications.
In addition, applications in which human life or property that could be greatly affected, such as in aircraft, medical applications, incineration and fuel devices, manned transportation, equipment for recreation and amusement, and safety devices, shall also be excluded from the programmable controller range of applications.
However, in certain cases, some applications may be possible, providing the user consults their local Mitsubishi representative outlining the special requirements of the project, and providing that all parties concerned agree to the special circumstances, solely at the users discretion.

Digital-Analog Converter Module Type A1S68DAV/DAI

User's Manual

MODEL	A1S68DAV-U-E
MODEL CODE	13J810
IB(NA)-66587-G(0707)MEE	

MITSUBISHI ELECTRIC CORPORATION

HEAD OFFICE : TOKYO BUILDING, 2-7-3 MARUNOUCHI, CHIYODA-KU, TOKYO 100-8310, JAPAN
NAGOYA WORKS : 1-14 , YADA-MINAMI 5-CHOME , HIGASHI-KU, NAGOYA , JAPAN

When exported from Japan, this manual does not require application to the Ministry of Economy, Trade and Industry for service transaction permission.

Specifications subject to change without notice.