MITSUBISHI ELECTRIC

MOTION CONTROLLERS

Changes for the Better

MOTION CONTROLLER

Q series

SV13/SV22(REAL MODE)

Q173HCPU

Q172HCPU

Programming Manual

● SAFETY PRECAUTIONS ●

(Read these precautions before using.)

When using this equipment, thoroughly read this manual and the associated manuals introduced in this manual. Also pay careful attention to safety and handle the module properly.
These precautions apply only to this equipment. Refer to the Q173HCPU/Q172HCPU Users manual for a description of the Motion controller safety precautions.
These SAFETY PRECAUTIONS classify the safety precautions into two categories: "DANGER" and "CAUTION".

! DANGER	Indicates that incorrect handling may cause hazardous conditions, resulting in death or severe injury.
⚠ CAUTION	Indicates that incorrect handling may cause hazardous conditions, resulting in medium or slight personal injury or physical damage.

Depending on circumstances, procedures indicated by ⚠ CAUTION may also be linked to serious results.
In any case, it is important to follow the directions for usage.

Store this manual in a safe place so that you can take it out and read it whenever necessary. Always forward it to the end user.

For Safe Operations

1. Prevention of electric shocks

⚠ DANGER

- Never open the front case or terminal covers while the power is ON or the unit is running, as this may lead to electric shocks.
- Never run the unit with the front case or terminal cover removed. The high voltage terminal and charged sections will be exposed and may lead to electric shocks.
- Never open the front case or terminal cover at times other than wiring work or periodic inspections even if the power is OFF. The insides of the Motion controller and servo amplifier are charged and may lead to electric shocks.
- When performing wiring work or inspections, turn the power OFF, wait at least ten minutes, and then check the voltage with a tester, etc.. Failing to do so may lead to electric shocks.
- Be sure to ground the Motion controller, servo amplifier and servomotor. (Ground resistance : 100 Ω or less) Do not ground commonly with other devices.
- The wiring work and inspections must be done by a qualified technician.
- Wire the units after installing the Motion controller, servo amplifier and servomotor. Failing to do so may lead to electric shocks or damage.
- Never operate the switches with wet hands, as this may lead to electric shocks.
- Do not damage, apply excessive stress, place heavy things on or sandwich the cables, as this may lead to electric shocks.
- Do not touch the Motion controller, servo amplifier or servomotor terminal blocks while the power is ON, as this may lead to electric shocks.
- Do not touch the built-in power supply, built-in grounding or signal wires of the Motion controller and servo amplifier, as this may lead to electric shocks.

2. For fire prevention

⚠ CAUTION

- Install the Motion controller, servo amplifier, servomotor and regenerative resistor on inflammable material. Direct installation on flammable material or near flammable material may lead to fire.
- If a fault occurs in the Motion controller or servo amplifier, shut the power OFF at the servo amplifier's power source. If a large current continues to flow, fire may occur.
- When using a regenerative resistor, shut the power OFF with an error signal. The regenerative resistor may abnormally overheat due to a fault in the regenerative transistor, etc., and may lead to fire.
- Always take heat measures such as flame proofing for the inside of the control panel where the servo amplifier or regenerative resistor is installed and for the wires used. Failing to do so may lead to fire.

3. For injury prevention

⚠ CAUTION
● Do not apply a voltage other than that specified in the instruction manual on any terminal. Doing so may lead to destruction or damage. ● Do not mistake the terminal connections, as this may lead to destruction or damage. ● Do not mistake the polarity (+ / -), as this may lead to destruction or damage. ● Do not touch the servo amplifier's heat radiating fins, regenerative resistor and servomotor, etc., while the power is ON and for a short time after the power is turned OFF. In this timing, these parts become very hot and may lead to burns. ● Always turn the power OFF before touching the servomotor shaft or coupled machines, as these parts may lead to injuries. ● Do not go near the machine during test operations or during operations such as teaching. Doing so may lead to injuries.

4. Various precautions

Strictly observe the following precautions.

Mistaken handling of the unit may lead to faults, injuries or electric shocks.

(1) System structure

⚠ CAUTION
● Always install a leakage breaker on the Motion controller and servo amplifier power source. ● If installation of an electromagnetic contactor for power shut off during an error, etc., is specified in the instruction manual for the servo amplifier, etc., always install the electromagnetic contactor. ● Install the emergency stop circuit externally so that the operation can be stopped immediately and the power shut off. ● Use the Motion controller, servo amplifier, servomotor and regenerative resistor with the combinations listed in the instruction manual. Other combinations may lead to fire or faults. ● If safety standards (ex., robot safety rules, etc.,) apply to the system using the Motion controller, servo amplifier and servomotor, make sure that the safety standards are satisfied. ● Construct a safety circuit externally of the Motion controller or servo amplifier if the abnormal operation of the Motion controller or servo amplifier differ from the safety directive operation in the system. ● In systems where coasting of the servomotor will be a problem during the forced stop, emergency stop, servo OFF or power supply OFF, use dynamic brakes. ● Make sure that the system considers the coasting amount even when using dynamic brakes. ● In systems where perpendicular shaft dropping may be a problem during the forced stop, emergency stop, servo OFF or power supply OFF, use both dynamic brakes and electromagnetic brakes. ● The dynamic brakes must be used only on errors that cause the forced stop, emergency stop, or servo OFF. These brakes must not be used for normal braking.

⚠ CAUTION

- The brakes (electromagnetic brakes) assembled into the servomotor are for holding applications, and must not be used for normal braking.
- The system must have a mechanical allowance so that the machine itself can stop even if the stroke limits switch is passed through at the max. speed.
- Use wires and cables that have a wire diameter, heat resistance and bending resistance compatible with the system.
- Use wires and cables within the length of the range described in the instruction manual.
- The ratings and characteristics of the parts (other than Motion controller, servo amplifier and servomotor) used in a system must be compatible with the Motion controller, servo amplifier and servomotor.
- Install a cover on the shaft so that the rotary parts of the servomotor are not touched during operation.
- There may be some cases where holding by the electromagnetic brakes is not possible due to the life or mechanical structure (when the ball screw and servomotor are connected with a timing belt, etc.). Install a stopping device to ensure safety on the machine side.

(2) Parameter settings and programming

⚠ CAUTION

- Set the parameter values to those that are compatible with the Motion controller, servo amplifier, servomotor and regenerative resistor model and the system application. The protective functions may not function if the settings are incorrect.
- The regenerative resistor model and capacity parameters must be set to values that conform to the operation mode, servo amplifier and servo power supply module. The protective functions may not function if the settings are incorrect.
- Set the mechanical brake output and dynamic brake output validity parameters to values that are compatible with the system application. The protective functions may not function if the settings are incorrect.
- Set the stroke limit input validity parameter to a value that is compatible with the system application. The protective functions may not function if the setting is incorrect.
- Set the servomotor encoder type (increment, absolute position type, etc.) parameter to a value that is compatible with the system application. The protective functions may not function if the setting is incorrect.
- Set the servomotor capacity and type (standard, low-inertia, flat, etc.) parameter to values that are compatible with the system application. The protective functions may not function if the settings are incorrect.
- Set the servo amplifier capacity and type parameters to values that are compatible with the system application. The protective functions may not function if the settings are incorrect.
- Use the program commands for the program with the conditions specified in the instruction manual.

⚠ CAUTION

- Set the sequence function program capacity setting, device capacity, latch validity range, I/O assignment setting, and validity of continuous operation during error detection to values that are compatible with the system application. The protective functions may not function if the settings are incorrect.
- Some devices used in the program have fixed applications, so use these with the conditions specified in the instruction manual.
- The input devices and data registers assigned to the link will hold the data previous to when communication is terminated by an error, etc. Thus, an error correspondence interlock program specified in the instruction manual must be used.
- Use the interlock program specified in the special function module's instruction manual for the program corresponding to the special function module.

(3) Transportation and installation

⚠ CAUTION

- Transport the product with the correct method according to the mass.
- Use the servomotor suspension bolts only for the transportation of the servomotor. Do not transport the servomotor with machine installed on it.
- Do not stack products past the limit.
- When transporting the Motion controller or servo amplifier, never hold the connected wires or cables.
- When transporting the servomotor, never hold the cables, shaft or detector.
- When transporting the Motion controller or servo amplifier, never hold the front case as it may fall off.
- When transporting, installing or removing the Motion controller or servo amplifier, never hold the edges.
- Install the unit according to the instruction manual in a place where the mass can be withstood.
- Do not get on or place heavy objects on the product.
- Always observe the installation direction.
- Keep the designated clearance between the Motion controller or servo amplifier and control panel inner surface or the Motion controller and servo amplifier, Motion controller or servo amplifier and other devices.
- Do not install or operate Motion controller, servo amplifiers or servomotors that are damaged or that have missing parts.
- Do not block the intake/outtake ports of the servomotor with cooling fan.
- Do not allow conductive matter such as screw or cutting chips or combustible matter such as oil enter the Motion controller, servo amplifier or servomotor.
- The Motion controller, servo amplifier and servomotor are precision machines, so do not drop or apply strong impacts on them.

⚠ CAUTION

- Securely fix the Motion controller and servo amplifier to the machine according to the instruction manual. If the fixing is insufficient, these may come off during operation.
- Always install the servomotor with reduction gears in the designated direction. Failing to do so may lead to oil leaks.
- Store and use the unit in the following environmental conditions.

Environment	Conditions	
	Motion controller/Servo amplifier	Servomotor
Ambient temperature	According to each instruction manual.	0°C to +40°C (With no freezing) (32°F to +104°F)
Ambient humidity	According to each instruction manual.	80% RH or less (With no dew condensation)
Storage temperature	According to each instruction manual.	-20°C to +65°C (-4°F to +149°F)
Atmosphere	Indoors (where not subject to direct sunlight). No corrosive gases, flammable gases, oil mist or dust must exist	
Altitude	1000m (3280.84ft.) or less above sea level	
Vibration	According to each instruction manual	

- When coupling with the synchronization encoder or servomotor shaft end, do not apply impact such as by hitting with a hammer. Doing so may lead to detector damage.
- Do not apply a load larger than the tolerable load onto the servomotor shaft. Doing so may lead to shaft breakage.
- When not using the module for a long time, disconnect the power line from the Motion controller or servo amplifier.
- Place the Motion controller and servo amplifier in static electricity preventing vinyl bags and store.
- When storing for a long time, please contact with our sales representative.

(4) Wiring

⚠ CAUTION

- Correctly and securely wire the wires. Reconfirm the connections for mistakes and the terminal screws for tightness after wiring. Failing to do so may lead to run away of the servomotor.
- After wiring, install the protective covers such as the terminal covers to the original positions.
- Do not install a phase advancing capacitor, surge absorber or radio noise filter (option FR-BIF) on the output side of the servo amplifier.
- Correctly connect the output side (terminals U, V, W). Incorrect connections will lead the servomotor to operate abnormally.
- Do not connect a commercial power supply to the servomotor, as this may lead to trouble.
- Do not mistake the direction of the surge absorbing diode installed on the DC relay for the control signal output of brake signals, etc. Incorrect installation may lead to signals not being output when trouble occurs or the protective functions not functioning.

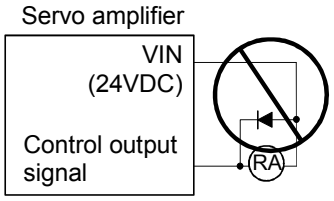

- Do not connect or disconnect the connection cables between each unit, the encoder cable or PLC expansion cable while the power is ON.
- Securely tighten the cable connector fixing screws and fixing mechanisms. Insufficient fixing may lead to the cables combing off during operation.
- Do not bundle the power line or cables.

(5) Trial operation and adjustment

⚠ CAUTION

- Confirm and adjust the program and each parameter before operation. Unpredictable movements may occur depending on the machine.
- Extreme adjustments and changes may lead to unstable operation, so never make them.
- When using the absolute position system function, on starting up, and when the Motion controller or absolute value motor has been replaced, always perform a home position return.

(6) Usage methods

⚠ CAUTION

- Immediately turn OFF the power if smoke, abnormal sounds or odors are emitted from the Motion controller, servo amplifier or servomotor.
- Always execute a test operation before starting actual operations after the program or parameters have been changed or after maintenance and inspection.
- The units must be disassembled and repaired by a qualified technician.
- Do not make any modifications to the unit.
- Keep the effect or electromagnetic obstacles to a minimum by installing a noise filter or by using wire shields, etc. Electromagnetic obstacles may affect the electronic devices used near the Motion controller or servo amplifier.
- When using the CE Mark-compliant equipment, refer to the "EMC Installation Guidelines" (data number IB(NA)-67339) for the Motion controllers and refer to the corresponding EMC guideline information for the servo amplifiers, inverters and other equipment.
- Use the units with the following conditions.

Item	Conditions					
	Q61P-A1	Q61P-A2	Q61P	Q62P	Q63P	Q64P
Input power	100 to 120VAC $^{+10\%}_{-15\%}$ (85 to 132VAC)	200 to 240VAC $^{+10\%}_{-15\%}$ (170 to 264VAC)	100 to 240VAC $^{+10\%}_{-15\%}$ (85 to 264VAC)		24VDC $^{+30\%}_{-35\%}$ (15.6 to 31.2VDC)	100 to 120VAC $^{+10\%}_{-15\%}$ / 200 to 240VAC $^{+10\%}_{-15\%}$ (85 to 132VAC/ 170 to 264VAC)
Input frequency	50/60Hz ±5%					
Tolerable momentary power failure	20ms or less					

(7) Corrective actions for errors

⚠ CAUTION

- If an error occurs in the self diagnosis of the Motion controller or servo amplifier, confirm the check details according to the instruction manual, and restore the operation.
- If a dangerous state is predicted in case of a power failure or product failure, use a servomotor with electromagnetic brakes or install a brake mechanism externally.
- Use a double circuit construction so that the electromagnetic brake operation circuit can be operated by emergency stop signals set externally.

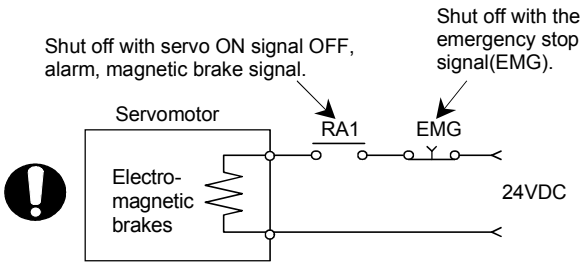

⚠ CAUTION

- If an error occurs, remove the cause, secure the safety and then resume operation after alarm release.
- The unit may suddenly resume operation after a power failure is restored, so do not go near the machine. (Design the machine so that personal safety can be ensured even if the machine restarts suddenly.)

(8) Maintenance, inspection and part replacement

⚠ CAUTION

- Perform the daily and periodic inspections according to the instruction manual.
- Perform maintenance and inspection after backing up the program and parameters for the Motion controller and servo amplifier.
- Do not place fingers or hands in the clearance when opening or closing any opening.
- Periodically replace consumable parts such as batteries according to the instruction manual.
- Do not touch the lead sections such as ICs or the connector contacts.
- Do not place the Motion controller or servo amplifier on metal that may cause a power leakage or wood, plastic or vinyl that may cause static electricity buildup.
- Do not perform a megger test (insulation resistance measurement) during inspection.
- When replacing the Motion controller or servo amplifier, always set the new module settings correctly.
- When the Motion controller or absolute value motor has been replaced, carry out a home position return operation using one of the following methods, otherwise position displacement could occur.
  1) After writing the servo data to the Motion controller using programming software, switch on the power again, then perform a home position return operation.
  2) Using the backup function of the programming software, load the data backed up before replacement.
- After maintenance and inspections are completed, confirm that the position detection of the absolute position detector function is correct.
- Do not short circuit, charge, overheat, incinerate or disassemble the batteries.
- The electrolytic capacitor will generate gas during a fault, so do not place your face near the Motion controller or servo amplifier.
- The electrolytic capacitor and fan will deteriorate. Periodically replace these to prevent secondary damage from faults. Replacements can be made by our sales representative.

(9) About processing of waste

When you discard Motion controller, servo amplifier, a battery (primary battery) and other option articles, please follow the law of each country (area).

⚠ CAUTION
● This product is not designed or manufactured to be used in equipment or systems in situations that can affect or endanger human life. ● When considering this product for operation in special applications such as machinery or systems used in passenger transportation, medical, aerospace, atomic power, electric power, or submarine repeating applications, please contact your nearest Mitsubishi sales representative. ● Although this product was manufactured under conditions of strict quality control, you are strongly advised to install safety devices to forestall serious accidents when it is used in facilities where a breakdown in the product is likely to cause a serious accident.

(10) General cautions

⚠ CAUTION
● All drawings provided in the instruction manual show the state with the covers and safety partitions removed to explain detailed sections. When operating the product, always return the covers and partitions to the designated positions, and operate according to the instruction manual.

REVISIONS

* The manual number is given on the bottom left of the back cover.

Print Date	* Manual Number	Revision
Jun., 2005	IB(NA)-0300113-A	First edition
Sep., 2006	IB(NA)-0300113-B	[Additional model] Q61P, MR-J3-□B(Large capacity), MR-J3-□B-RJ006 [Additional function] Control loop changing command, Control loop monitor status [Additional correction/partial correction] About Manuals, Device lists, Error list, etc.

Japanese Manual Number IB(NA)-0300093

This manual confers no industrial property rights or any rights of any other kind, nor does it confer any patent licenses. Mitsubishi Electric Corporation cannot be held responsible for any problems involving industrial property rights which may occur as a result of using the contents noted in this manual.

© 2005 MITSUBISHI ELECTRIC CORPORATION

INTRODUCTION

Thank you for choosing the Q173HCPU/Q172HCPU Motion Controller.
Please read this manual carefully so that equipment is used to its optimum.

CONTENTS

Safety Precautions ..... A- 1
Revisions A-11
Contents A-12
About Manuals A-16

1. OVERVIEW 1- 1 to 1- 6

1.1 Overview 1- 1
1.2 Features 1- 3
1.2.1 Performance Specifications 1- 3
1.2.2 Differences between Q173HCPU/Q172HCPU and Q173CPU(N)/Q172CPU(N) 1- 5

2. POSITIONING CONTROL BY THE MOTION CPU 2- 1 to 2-14

2.1 Positioning Control by the Motion CPU 2- 1

3. POSITIONING DEDICATED SIGNALS 3- 1 to 3-66

3.1 Internal Relays 3- 2
3.1.1 Axis statuses 3-12
3.1.2 Axis command signals 3-22
3.1.3 Common devices 3-29
3.2 Data Registers 3-42
3.2.1 Axis monitor devices 3-46
3.2.2 Control change registers 3-52
3.2.3 Common devices 3-53
3.3 Motion Registers(#) 3-57
3.4 Special Relays (SP.M) 3-58
3.5 Special Registers (SP.D) 3-60

4. PARAMETERS FOR POSITIONING CONTROL 4- 1 to 4-14

4.1 System Settings 4- 1
4.2 Fixed Parameters 4- 2
4.2.1 Number of pulses/travel value per rotation 4- 3
4.2.2 Backlash compensation amount 4- 5
4.2.3 Upper/lower stroke limit value 4- 5
4.2.4 Command in-position range 4- 7
4.2.5 Speed control 10×multiplier setting for degree axis 4- 8
4.3 Parameter Block 4-11
4.3.1 Relationships between the speed limit value, acceleration time, deceleration time and rapid stop deceleration time 4-13
4.3.2 S-curve ratio 4-13

4.3.3 Allowable error range for circular interpolation 4-14

5. SERVO PROGRAMS FOR POSITIONING CONTROL 5- 1 to 5-24

5.1 Servo Program Composition Area 5- 1
5.1.1 Servo program composition 5- 1
5.1.2 Servo program area 5- 2
5.2 Servo Instructions 5- 3
5.3 Positioning Data 5-16
5.4 Setting Method for Positioning Data 5-22
5.4.1 Setting method by specifying numerical values 5-22
5.4.2 Indirect setting method by word devices (D, W and #) 5-23

6. POSITIONING CONTROL 6- 1 to 6-232

6.1 Basics of Positioning Control 6- 1
6.1.1 Positioning speed 6- 1
6.1.2 Positioning speed at the interpolation control 6- 2
6.1.3 Control units for 1 axis positioning control 6- 7
6.1.4 Control units for interpolation control 6- 7
6.1.5 Control in the control unit "degree" 6- 9
6.1.6 Stop processing and restarting after stop 6-11
6.1.7 Acceleration/deceleration processing 6-17
6.2 1 Axis Linear Positioning Control 6-19
6.3 2 Axes Linear Interpolation Control 6-22
6.4 3 Axes Linear Interpolation Control 6-27
6.5 4 Axes Linear Interpolation Control 6-33
6.6 Auxiliary Point-Specified Circular Interpolation Control 6-38
6.7 Radius-Specified Circular Interpolation Control 6-43
6.8 Central Point-Specified Circular Interpolation Control 6-49
6.9 Helical Interpolation Control 6-55
6.9.1 Circular interpolation specified method by helical interpolation 6-56
6.10 1 Axis Fixed-Pitch Feed Control 6-77
6.11 Fixed-Pitch Feed Control Using 2 Axes Linear Interpolation 6-81
6.12 Fixed-Pitch Feed Control Using 3 Axes Linear Interpolation 6-85
6.13 Speed Control (Ⅰ) 6-89
6.14 Speed Control (Ⅱ) 6-93
6.15 Speed/Position Switching Control 6-96
6.15.1 Speed/position switching control start 6-96
6.15.2 Re-starting after stop during control 6-103
6.16 Speed-Switching Control 6-108
6.16.1 Speed-switching control start, speed-switching points and end specification 6-108
6.16.2 Specification of speed-switching points using repetition instructions 6-114
6.17 Constant-Speed Control 6-120
6.17.1 Specification of pass points by repetition instructions 6-124
6.17.2 Speed-switching by instruction execution 6-129
6.17.3 1 axis constant-speed control 6-134
6.17.4 2 to 4 axes constant-speed control 6-138
6.17.5 Constant speed control for helical interpolation 6-145
6.17.6 Pass point skip function 6-148

6.17.7 FIN signal wait function 6-150
6.18 Position Follow-Up Control 6-159
6.19 Speed control with fixed position stop 6-165
6.20 Simultaneous Start 6-170
6.21 JOG Operation 6-173
6.21.1 JOG operation data 6-173
6.21.2 Individual start 6-174
6.21.3 Simultaneous start 6-179
6.22 Manual Pulse Generator Operation 6-182
6.23 Home Position Return 6-188
6.23.1 Home position return data 6-190
6.23.2 Home position return by the proximity dog type 1 6-198
6.23.3 Home position return by the proximity dog type 2 6-201
6.23.4 Home position return by the count type 1 6-203
6.23.5 Home position return by the count type 2 6-205
6.23.6 Home position return by the count type 3 6-206
6.23.7 Home position return by the data set type 1 6-208
6.23.8 Home position return by the data set type 2 6-209
6.23.9 Home position return by the dog cradle type 6-210
6.23.10 Home position return by the stopper type 1 6-214
6.23.11 Home position return by the stopper type 2 6-216
6.23.12 Home position return by the limit switch combined type 6-218
6.23.13 Home position return retry function 6-220
6.23.14 Home position shift function 6-224
6.23.15 Condition selection of home position set 6-228
6.23.16 Servo program for home position return 6-229
6.24 High-Speed Oscillation 6-231

7. AUXILIARY AND APPLIED FUNCTIONS 7- 1 to 7-12

7.1 M-code Output Function 7- 1
7.2 Backlash Compensation Function 7- 4
7.3 Torque Limit Function 7- 6
7.4 Skip Function in which Disregards Stop Command 7- 8
7.5 Cancel of the Servo Program 7-10
7.5.1 Cancel/start 7-11

APPENDICES App- 1 to App-65

APPENDIX 1 Error Codes Stored Using The Motion CPU ..... App- 1
APPENDIX 1.1 Servo program setting errors (Stored in D9190) ..... App- 3
APPENDIX 1.2 Minor errors ..... App- 7
APPENDIX 1.3 Major errors App-17
APPENDIX 1.4 Servo errors App-21
APPENDIX 1.5 PC link communication errors App-40
APPENDIX 2 Special Relays/special registers App-41
APPENDIX 2.1 Special relays App-41
APPENDIX 2.2 Special registers App-44
APPENDIX 3 Example Programs App-48
APPENDIX 3.1 Reading M-code App-48

APPENDIX 3.2 Reading error code.....App-49
APPENDIX 4 Setting Range for Indirect Setting Devices.....App-51
APPENDIX 5 Processing Times of the Motion CPU App-53

About Manuals

The following manuals are related to this product.

Referring to this list, please request the necessary manuals.

Related Manuals

(1) Motion controller

Manual Name	Manual Number (Model Code)
Q173HCPU/Q172HCPU Motion controller User's Manual This manual explains specifications of the Motion CPU modules, Q172LX Servo external signal interface module, Q172EX Serial absolute synchronous encoder interface module, Q173PX Manual pulse generator interface module, Teaching units, Power supply modules, Servo amplifiers, SSCNETⅢ cables, synchronous encoder cables and others. (Optional)	IB-0300110 (1XB910)
Q173HCPU/Q172HCPU Motion controller Programming Manual (COMMON) This manual explains the Multiple CPU system configuration, performance specifications, common parameters, auxiliary/applied functions and others. (Optional)	IB-0300111 (1XB911)
Q173HCPU/Q172HCPU Motion controller (SV13/SV22) Programming Manual (Motion SFC) This manual explains the functions, programming, debugging, error codes and others of the Motion SFC. (Optional)	IB-0300112 (1XB912)
Q173HCPU/Q172HCPU Motion controller (SV22) Programming Manual (VIRTUAL MODE) This manual describes the dedicated instructions use to the synchronous control by virtual main shaft, mechanical system program create mechanical module. This manual explains the servo parameters, positioning instructions, device list, error list and others. (Optional)	IB-0300114 (1XB914)
Q173HCPU/Q172HCPU Motion controller (SV43) Programming Manual This manual describes the dedicated instructions to execute the positioning control by Motion program of EIA language (G-code). This manual explains the servo parameters, positioning instructions, device list, error list and others. (Optional)	IB-0300115 (1XB915)

(2) PLC

Manual Name	Manual Number (Model Code)
QCPU User's Manual (Hardware Design, Maintenance and Inspection) This manual explains the specifications of the QCPU modules, power supply modules, base modules, extension cables, memory card battery and others. (Optional)	SH-080483ENG (13JR73)
QCPU User's Manual (Function Explanation, Program Fundamentals) This manual explains the functions, programming methods and devices and others to create programs with the QCPU. (Optional)	SH-080484ENG (13JR74)
QCPU User's Manual (Multiple CPU System) This manual explains the functions, programming methods and cautions and others to construct the Multiple CPU system with the QCPU. (Optional)	SH-080485ENG (13JR75)
QCPU (Q Mode)/QnACPU Programming Manual (Common Instructions) This manual explains how to use the sequence instructions, basic instructions, application instructions and micro computer program. (Optional)	SH-080039 (13JF58)
QCPU (Q Mode)/QnACPU Programming Manual (PID Control Instructions) This manual explains the dedicated instructions used to exercise PID control. (Optional)	SH-080040 (13JF59)
QCPU (Q Mode)/QnACPU Programming Manual (SFC) This manual explains the system configuration, performance specifications, functions, programming, debugging, error codes and others of MELSAP3. (Optional)	SH-080041 (13JF60)
I/O Module Type Building Block User's Manual This manual explains the specifications of the I/O modules, connector, connector/terminal block conversion modules and others. (Optional)	SH-080042 (13JL99)

(3) Servo amplifier

Manual Name	Manual Number (Model Code)
MR-J3-□B Servo amplifier Instruction Manual This manual explains the I/O signals, parts names, parameters, start-up procedure and others for MR-J3-□B Servo amplifier. (Optional)	SH-030051 (1CW202)
Fully Closed Loop Control MR-J3-□B-RJ006 Servo amplifier Instruction Manual This manual explains the I/O signals, parts names, parameters, start-up procedure and others for Fully Closed Loop Control MR-J3-□B-RJ006 Servo amplifier. (Optional)	SH-030056 (1CW304)

MEMO

1. OVERVIEW

1.1 Overview

This programming manual describes the positioning control parameters, positioning dedicated devices and positioning method required to execute positioning control in the Motion controller (SV13/22 real mode).
The following positioning control is possible in the Motion controller (SV13/22 real mode).

Applicable CPU	Number of positioning control axes
Q173HCPU (32 axes)	Up to 32 axes
Q172HCPU (8 axes)	Up to 8 axes

In this manual, the following abbreviations are used.

Generic term/Abbreviation	Description
Q173HCPU/Q172HCPU or Motion CPU (module)	Q173HCPU/Q172HCPU/Q173HCPU-T/Q172HCPU-T Motion CPU module
Q172LX/Q172EX/Q173PX or Motion module	Q172LX Servo external signals interface module/ Q172EX-S2/-S3 Serial absolute synchronous encoder interface module(Note-1)/ Q173PX(-S1) Manual pulse generator interface module
MR-J3-□B	Servo amplifier model MR-J3-□B
AMP or Servo amplifier	General name for "Servo amplifier model MR-J3-□B"
QCPU, PLC CPU or PLC CPU module	Qn(H)CPU
Multiple CPU system or Motion system	Abbreviation for "Multiple PLC system of the Q series"
CPUn	Abbreviation for "CPU No.n (n= 1 to 4) of the CPU module for the Multiple CPU system"
Programming software package	General name for "MT Developer" and "GX Developer"
Operating system software	General name for "SW□RN-SV□Q□"
SV13	Operating system software for conveyor assembly use (Motion SFC) : SW6RN-SV13Q□
SV22	Operating system software for automatic machinery use (Motion SFC) : SW6RN-SV22Q□
MT Developer	Abbreviation for Integrated start-up support software package "MT Developer (Version 00K or later)"
GX Developer	Abbreviation for MELSEC PLC programming software package "GX Developer (Version 6 or later)"
Manual pulse generator or MR-HDP01	Abbreviation for "Manual pulse generator (MR-HDP01)"
Serial absolute synchronous encoder or Q170ENC	Abbreviation for "Serial absolute synchronous encoder (Q170ENC)"
SSCNETⅢ(Note-2)	High speed synchronous network between Motion controller and servo amplifier
SSCNET(Note-2)	High speed serial communication between Motion controller and servo amplifier
Absolute position system	General name for "system using the servomotor and servo amplifier for absolute position"
Battery holder unit	Battery holder unit (Q170HBATC)
External battery	General name for "Q170HBATC" and "Q6BAT"

Generic term/Abbreviation	Description
A□0BD-PCF	A10BD-PCF/A30BD-PCF SSC I/F board
SSC I/F communication cable	Abbreviation for "Cable for SSC I/F board/card"
Teaching Unit or A31TU-D3K□/A31TU-DNK□	A31TU-D3□/A31TU-DN□ Teaching unit(Note-3)
Intelligent function module	Abbreviation for "MELSECNET/H module/Ethernet module/CC-Link module/ Serial communication module"

(Note-1) : Q172EX can be used in SV22.

(Note-2) : SSCNET: Servo System Controller NETwork

(Note-3) : Teaching unit can be used in SV13.

REMARK

For information about the each module, design method for program and parameter, refer to the following manuals relevant to each module.

Item		Reference Manual
Motion CPU module/Motion unit		Q173HCPU/Q172HCPU User's Manual
PLC CPU, peripheral devices for PLC program design, I/O modules and intelligent function module		Manual relevant to each module
Operation method for MT Developer		Help of each software
SV13/SV22	• Multiple CPU system configuration • Performance specification • Design method for common parameter • Auxiliary and applied functions (common)	Q173HCPU/Q172HCPU Motion controller Programming Manual (COMMON)
	• Design method for Motion SFC program • Design method for Motion SFC parameter • Motion dedicated PLC instruction	Q173HCPU/Q172HCPU Motion controller (SV13/SV22) Programming Manual (Motion SFC)
SV22 (Virtual mode)	• Design method for mechanical system program	Q173HCPU/Q172HCPU Motion controller (SV13/SV22) Programming Manual (VIRTUAL MODE)

⚠ CAUTION

- When designing the system, provide external protective and safety circuits to ensure safety in the event of trouble with the Motion controller.
- There are electronic components which are susceptible to the effects of static electricity mounted on the printed circuit board. When handling printed circuit boards with bare hands you must ground your body or the work bench.

  Do not touch current-carrying or electric parts of the equipment with bare hands.
- Make parameter settings within the ranges stated in this manual.
- Use the program instructions that are used in programs in accordance with the conditions stipulated in this manual.
- Some devices for use in programs have fixed applications: they must be used in accordance with the conditions stipulated in this manual.

1.2 Features

1.2.1 Performance Specifications

(1) Motion control specifications

Item		Q173HCPU	Q173HCPU-T	Q172HCPU	Q172HCPU-T
Number of control axes		Up to 32 axes		Up to 8 axes	
Operation cycle (default)	SV13	0.44ms/ 1 to 3 axes 0.88ms/ 4 to 10 axes 1.77ms/11 to 20 axes 3.55ms/21 to 32 axes		0.44ms/ 1 to 3 axes 0.88ms/ 4 to 8 axes	
	SV22	0.88ms/ 1 to 5 axes 1.77ms/ 6 to 14 axes 3.55ms/15 to 28 axes 7.11ms/29 to 32 axes	——	0.88ms/ 1 to 4 axes 1.77ms/ 5 to 8 axes	——
Interpolation functions		Linear interpolation (Up to 4 axes), Circular interpolation (2 axes), Helical interpolation (3 axes)			
Control modes		PTP(Point to Point) control, Speed control, Speed-position control, Fixed-pitch feed, Constant speed control, Position follow-up control, Speed control with fixed position stop, Speed switching control, High-speed oscillation control, Synchronous control (SV22)			
Acceleration/ deceleration control		Automatic trapezoidal acceleration/deceleration, S-curve acceleration/deceleration			
Compensation		Backlash compensation, Electronic gear, Phase compensation (SV22)			
Programming language		Motion SFC, Dedicated instruction, Mechanical support language (SV22)			
Servo program capacity		14k steps			
Number of positioning points		3200 points (Positioning data can be designated indirectly)			
Programming tool		IBM PC/AT			
Peripheral I/F		USB/SSCNET			
Teaching operation function		None	Provided (SV13 use)	None	Provided (SV13 use)
Home position return function		Proximity dog type (2 types), Count type (3 types), Data set type (2 types), Dog cradle type, Stopper type (2 types), Limit switch combined type (Home position return re-try function provided, home position shift function provided)			
JOG operation function		Provided			
Manual pulse generator operation function		Possible to connect 3 modules			
Synchronous encoder operation function		Possible to connect 12 modules		Possible to connect 8 modules	
M-code function		M-code output function provided M-code completion wait function provided			
Limit switch output function		Number of output points 32 points Watch data: Motion control data/Word device			
Absolute position system		Made compatible by setting battery to servo amplifier. (Possible to select the absolute data method or incremental method for each axis)			

Motion control specifications (continued)

Item	Q173HCPU	Q173HCPU-T	Q172HCPU	Q172HCPU-T
Number of SSCNETⅢ systems (Note-1)	2 systems		1 system	
Motion related interface module	Q172LX : 4 modules usable Q172EX : 6 modules usable Q173PX : 4 modules usable (Note-2)		Q172LX : 1 module usable Q172EX : 4 modules usable Q173PX : 3 modules usable (Note-2)	

(Note-1) : The servo amplifiers for SSCNET cannot be used.

(Note-2) : When using the incremental synchronous encoder (SV22 use), you can use above number of modules.
When connecting the manual pulse generator, you can use only 1 module.

1.2.2 Differences between Q173HCPU/Q172HCPU and Q173CPU(N)/Q172CPU(N)

(1) Differences between Q173HCPU/Q172HCPU and Q173CPU(N)/Q172CPU(N)

Item		Q173HCPU	Q172HCPU	Q173CPU(N)	Q172CPU(N)
Number of control axes		Up to 32 axes	Up to 8 axes	Up to 32 axes	Up to 8 axes
Operation cycle (Default) (It can be set up by parameters.)	SV13	0.44ms/ 1 to 3 axes 0.88ms/ 4 to 10 axes 1.77ms/11 to 20 axes 3.55ms/21 to 32 axes	0.44ms/ 1 to 3 axes 0.88ms/ 4 to 8 axes	0.88ms/ 1 to 8 axes 1.77ms/ 9 to 16 axes 3.55ms/17 to 32 axes	0.88ms/ 1 to 8 axes
	SV22	0.88ms/ 1 to 5 axes 1.77ms/ 6 to 14 axes 3.55ms/15 to 28 axes 7.11ms/29 to 32 axes	0.88ms/ 1 to 5 axes 1.77ms/ 6 to 8 axes	0.88ms/ 1 to 4 axes 1.77ms/ 5 to 12 axes 3.55ms/13 to 24 axes 7.11ms/25 to 32 axes	0.88ms/ 1 to 4 axes 1.77ms/ 5 to 8 axes
Motion SFC program capacity		Code total : 543 kbyte Text total : 484 kbyte		Code total : 287 kbyte Text total : 224 kbyte	
Peripheral devices I/F		USB/SSCNET		USB/RS-232/SSCNET	
Servo amplifier I/F		SSCNETⅢ (Optical communication) Q173HCPU : 2 systems Q172HCPU : 1 system		SSCNET Q173CPU(N) : 4 systems (Note-1) Q172CPU(N) : 1 system	
Fixed position stop function with speed control		○		—	
Phase compensation function		○		—	
Indirect setting of home position return data		Indirect setting with word devices (D, W, #) of Motion CPU.		Only direct setting by programming software.	
Expansion of speed setting range in the unit [degree]		• When the speed control 10×multiplier setting for degree axis is valid ; 0.01 to 21474836.47[degree/min] • When the speed control 10×multiplier setting for degree axis is invalid ; 0.001 to 2147483.647[degree/min]		0.001 to 2147483.647[degree/min] fixed	
Fetch of external signal input		Q172LX/General input of servo amplifier (Note-2)		Q172LX	
Optional data monitor function		3 points/axis (Specified device D, W, #)		—	
Minor error [303], [304]		When the speed change is executed after positioning automatic decerelation start or during decerelation by the JOG start command signal (M3202+20n, M3203+20n) OFF, since the speed change request is ignored, a minor error [303], [304] will not occur.		When the speed change is executed after positioning automatic decerelation start or during decerelation by the JOG start command signal (M3202+20n, M3203+20n) OFF, a minor error [303], [304] will occur.	
Processing with power supply OFF of servo amplifier		Servo OFF is executed for all servo amplifier connected behind servo amplifier with which the control power supply was turned OFF.		Servo OFF is executed for only servo amplifier with which the control power supply was turned OFF.	
Back-up battery for internal memory		Internal rechargeable battery (Set the external battery (Q6BAT) if continuous power off time is longer for 1 month or more.) (Note-3)		Internal rechargeable battery (Set the external battery (A6BAT/MR-BAT) if continuous power off time is longer for 1 month or more.) (Note-4)	

(Note-1) : Use the Dividing unit (Q173DV) or dividing cable (Q173J2B△CBL□M/Q173HB△CBL□M).

(Note-2) : When selecting the each servo amplifier general input, the speed/position switching control cannot be executed. And, the external stop input cannot be used.

(Note-3) : When adding the external battery (Q6BAT), use the Q170HBATC.

(Note-4) : When adding the external battery (A6BAT/MR-BAT), use the Q173DV (Q173HCPU use) or Q170BAT (Q172HCPU use).

MEMO

2. POSITIONING CONTROL BY THE MOTION CPU

2.1 Positioning Control by the Motion CPU

The positioning control of up to 32 axes in Q173HCPU and up to 8 axes in Q172HCPU is possible in the Motion CPU.
There are following four functions as controls toward the servo amplifier/servomotor.

(1) Servo operation by the positioning instructions.
There are following two methods for execution of the positioning instruction.
(a) Programming using the motion control step "K" of Motion SFC.
The starting method of Motion SFC program is shown below.
1) Motion SFC start request (S(P).SFCS) of PLC CPU
2) Automatic start setting of Motion SFC program
(Note): Step "K" of the positioning instruction cannot be programmed to NMI task and event task.
3) Start by the Motion SFC program (GSUB)
(b) Execution of servo program by the servo program start request (S(P).SVST) of PLC CPU.

(2) JOG operation by the each axis command signal of Motion CPU.

(3) Manual pulse generator operation by the positioning dedicated device of Motion CPU.

(4) Speed change and torque limit value change during positioning control by the Motion dedicated PLC instruction (S(P).CHGV, S(P).CHGT) and Motion dedicated function (CHGV, CHGT) of operation control step "F".
(Note): Refer to the "Q173HCPU/Q172HCPU Motion controller(SV13/SV22) Programming Manual (Motion SFC)" for the Motion dedicated PLC instruction.

[Execution of the Motion SFC program start (S(P).SFCS instruction)]

Positioning control is executed by starting the Motion SFC program specified with S(P).SFCS instruction of the PLC CPU in the Motion CPU. (The Motion SFC program can also be started automatically by parameter setting.)
An overview of the starting method using the Motion SFC is shown below.

Multiple CPU control system

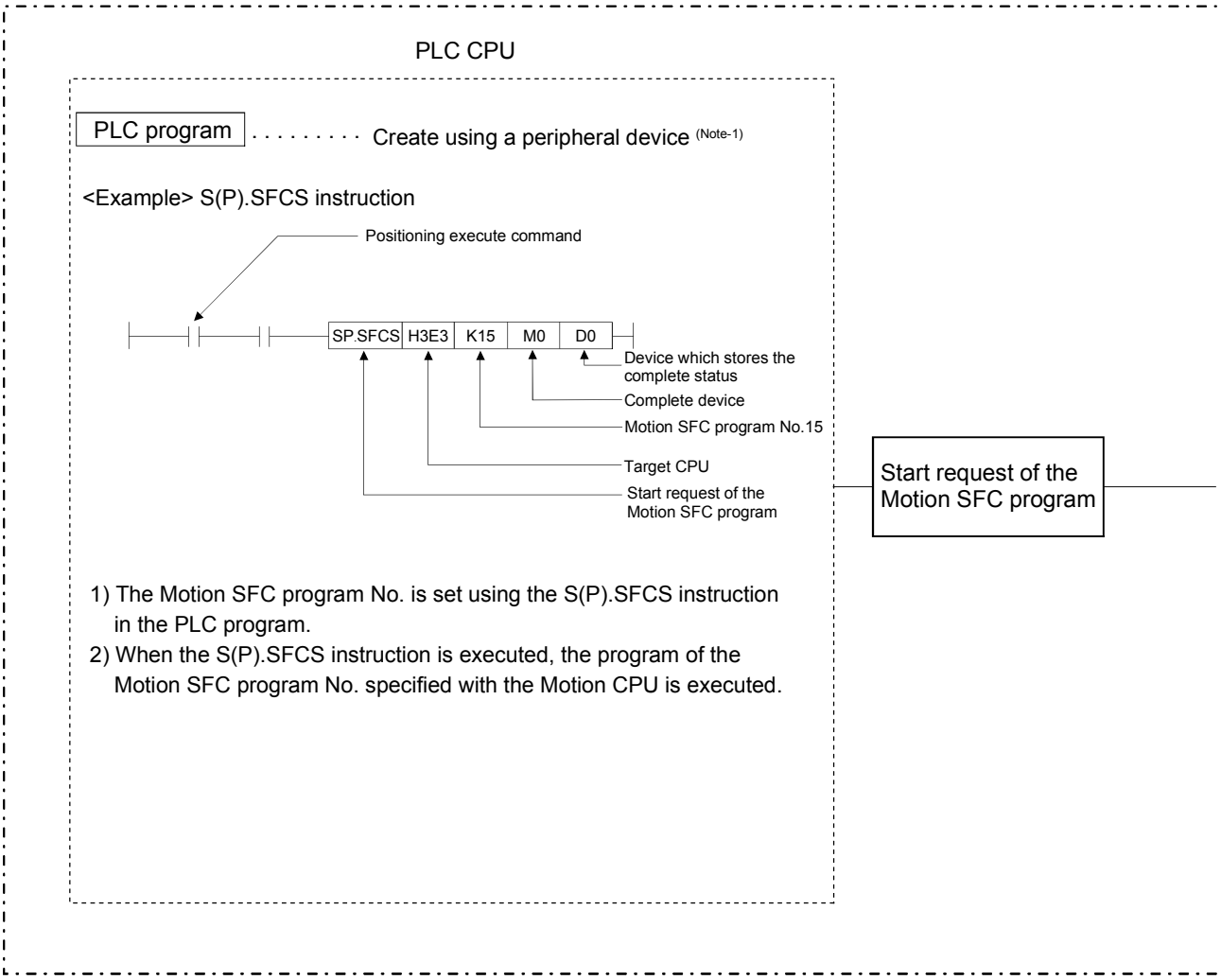

(1) Create the Motion SFC programs and positioning control parameters using a peripheral device.

(2) Perform the positioning start using the PLC program (S(P).SFCS instruction) of PLC CPU.
  (a) Motion SFC program No. is specified with the S(P).SFCS instruction.
    1) Motion SFC program No. can be set either directly or indirectly.

(3) Perform the specified positioning control using the specified with Motion SFC program.

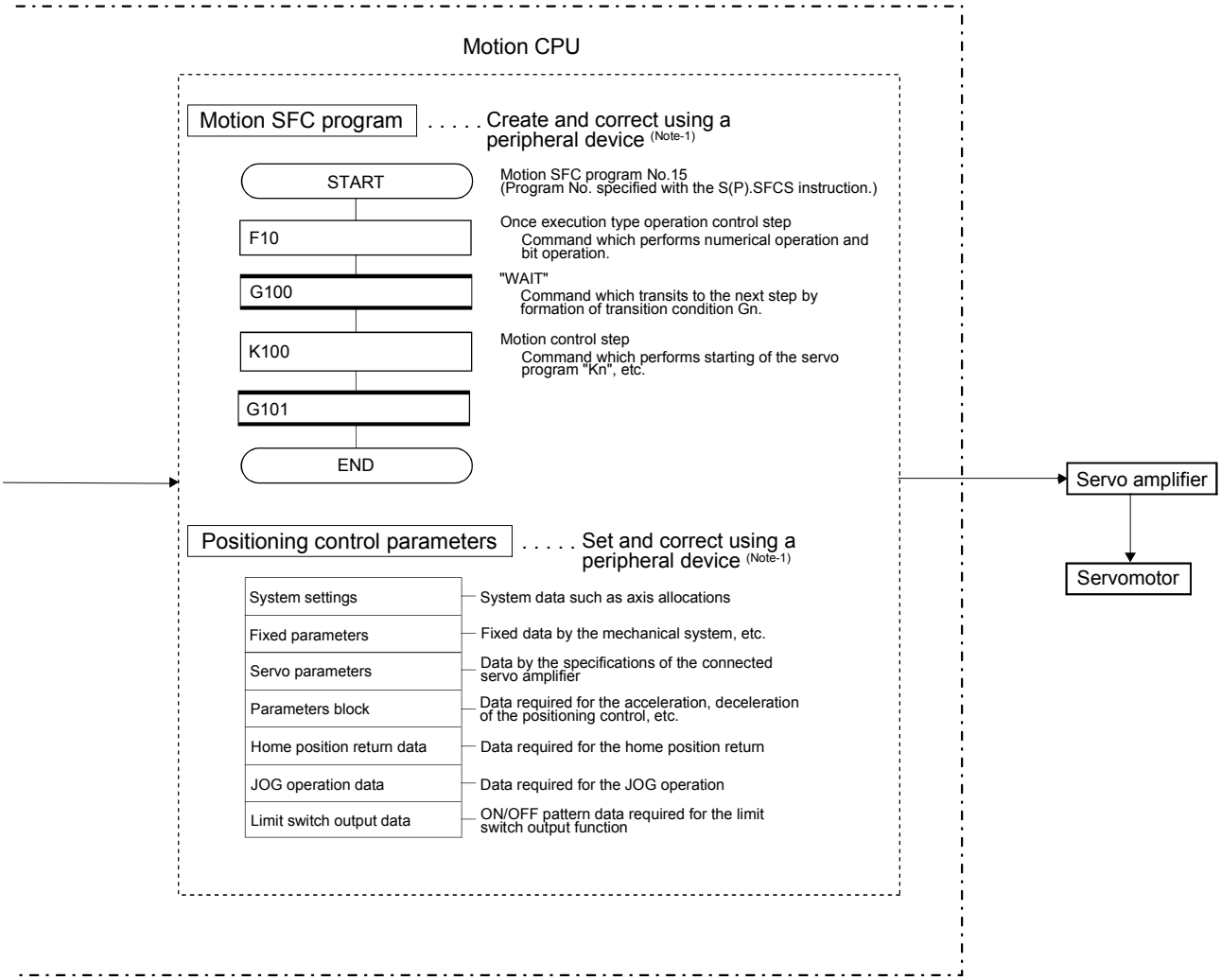

REMARK

(Note-1) : The following peripheral devices started by the SW6RN-GSV□P can be used.

- The personal computer by which WindowsNT® 4.0/Windows® 98/ Windows® 2000/Windows® XP works. (IBM PC/AT compatible)

WindowsNT® , Windows® are either registered trademarks or trademarks of Microsoft Corporation in the United States and/or other countries.

[Execution of the positioning control (Motion SFC program)]

The positioning control is executed using the servo program specified with the Motion SFC program in the Motion CPU system.
An overview of the positioning control is shown below.

Motion CPU control system

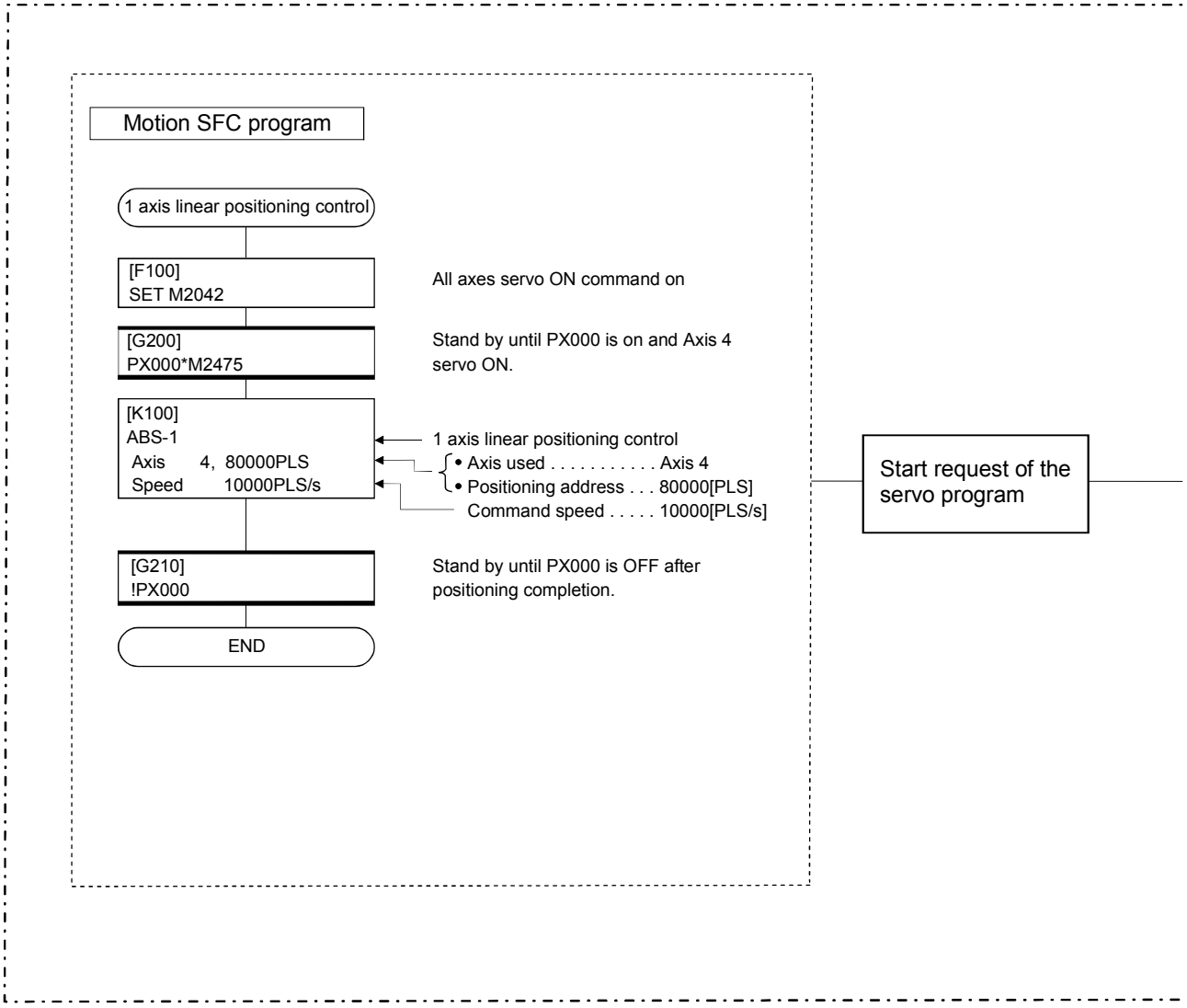

(1) Create the servo programs and positioning control parameters using a peripheral device.

(2) Specify the servo program started by the Motion SFC program.

(3) Perform the specified positioning control using the specified with servo program.

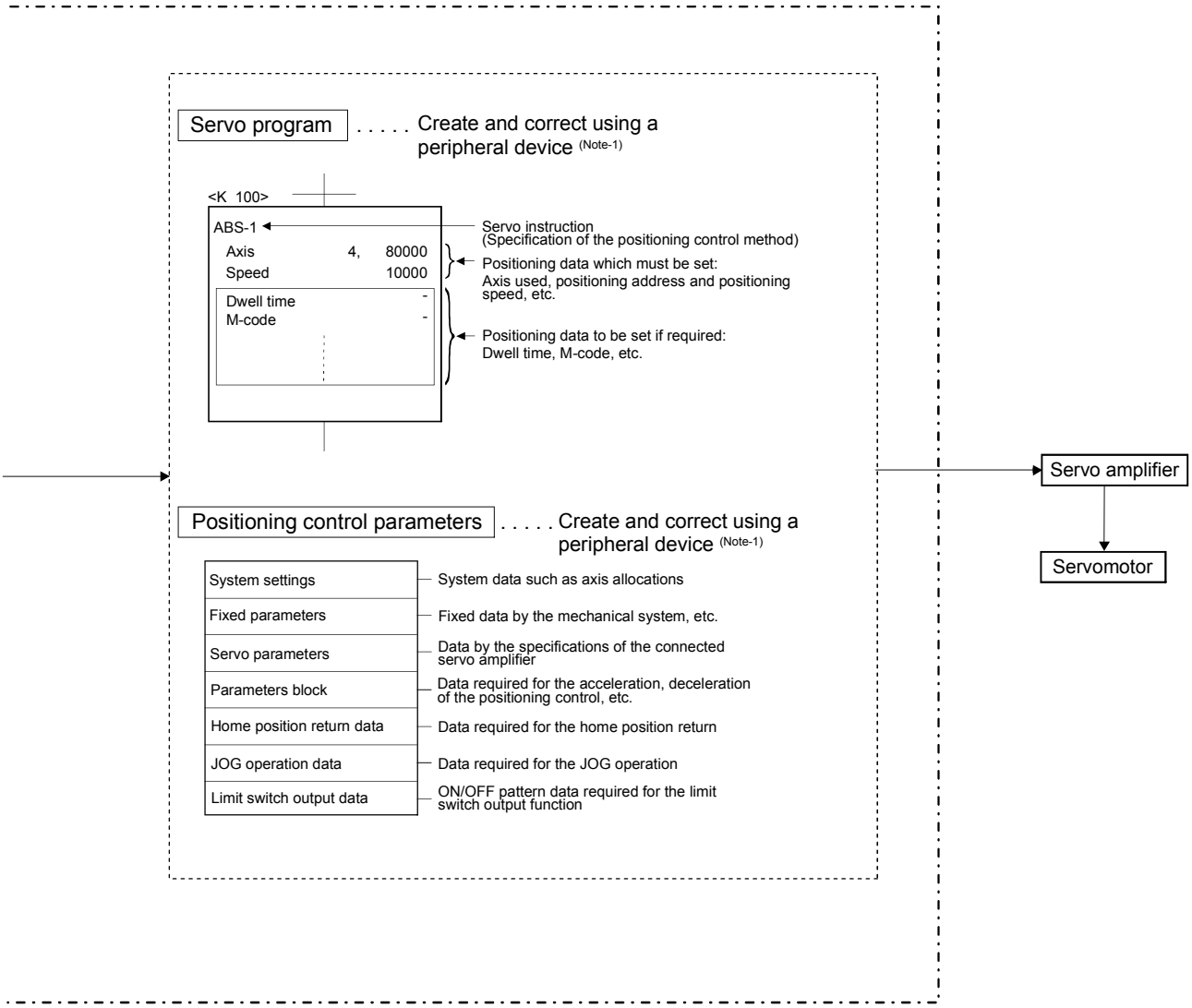

REMARK

(Note-1) : The following peripheral devices started by the SW6RN-GSV□P can be used.

- The personal computer by which WindowsNT® 4.0/Windows® 98/ Windows® 2000/Windows® XP works. (IBM PC/AT compatible)

WindowsNT® , Windows® are either registered trademarks or trademarks of Microsoft Corporation in the United States and/or other countries.

[Execution of the servo program start (S(P).SVST instruction)]

Positioning control is executed by starting the specified servo program toward the axis specified with S(P).SVST instruction of PLC CPU in the Motion CPU.
An overview of the starting method using the servo program is shown below.

Multiple CPU control system

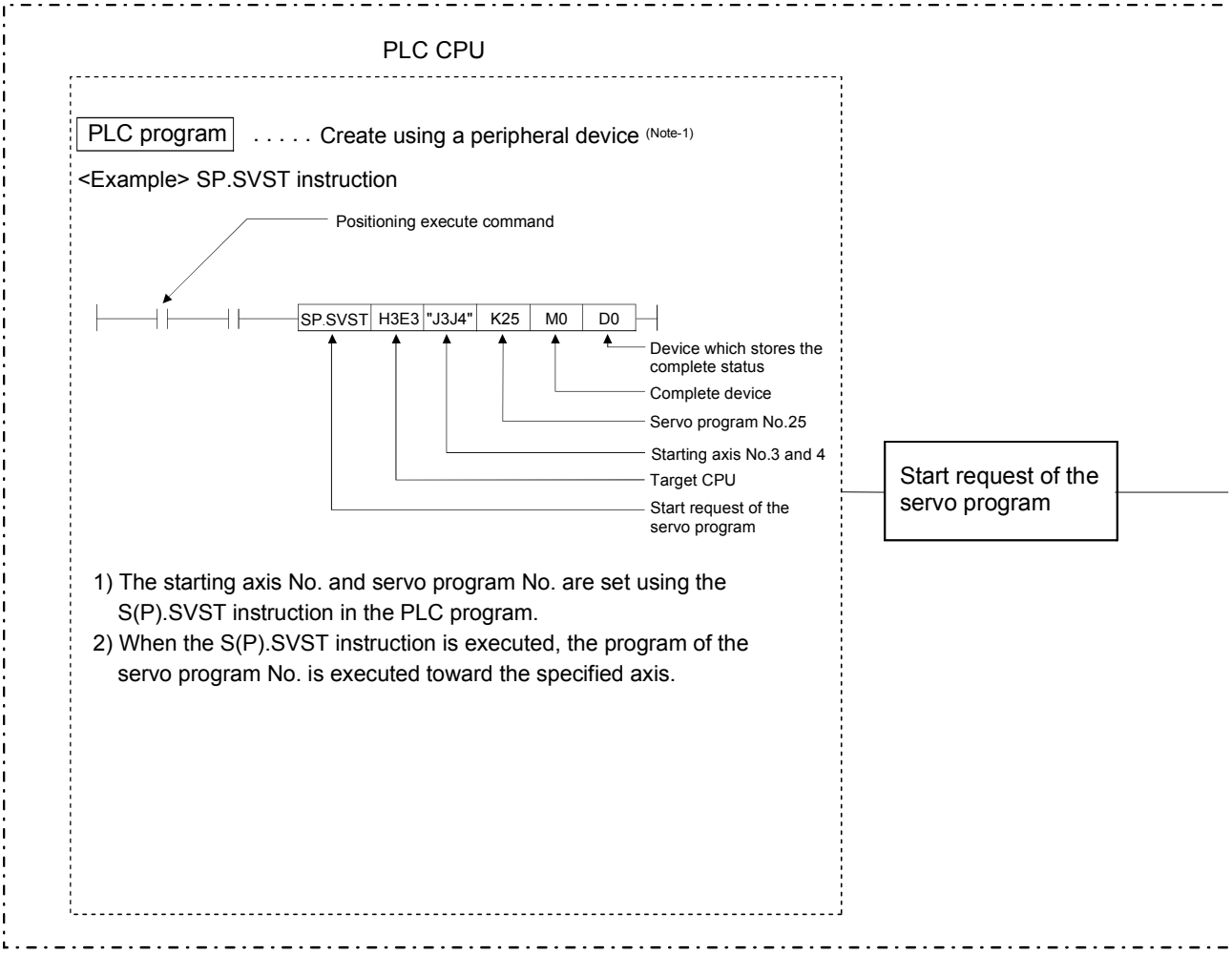

(1) Create the servo programs and positioning control parameters using a peripheral device.

(2) Perform the positioning start using the PLC program (S(P).SVST instruction) of PLC CPU.
  (a) Starting axis No. and servo program No. are specified with the S(P).SVST instruction.
    1) Servo program No. can be set either directly or indirectly.

(3) Perform the positioning control of specified servo program toward the specified axis.

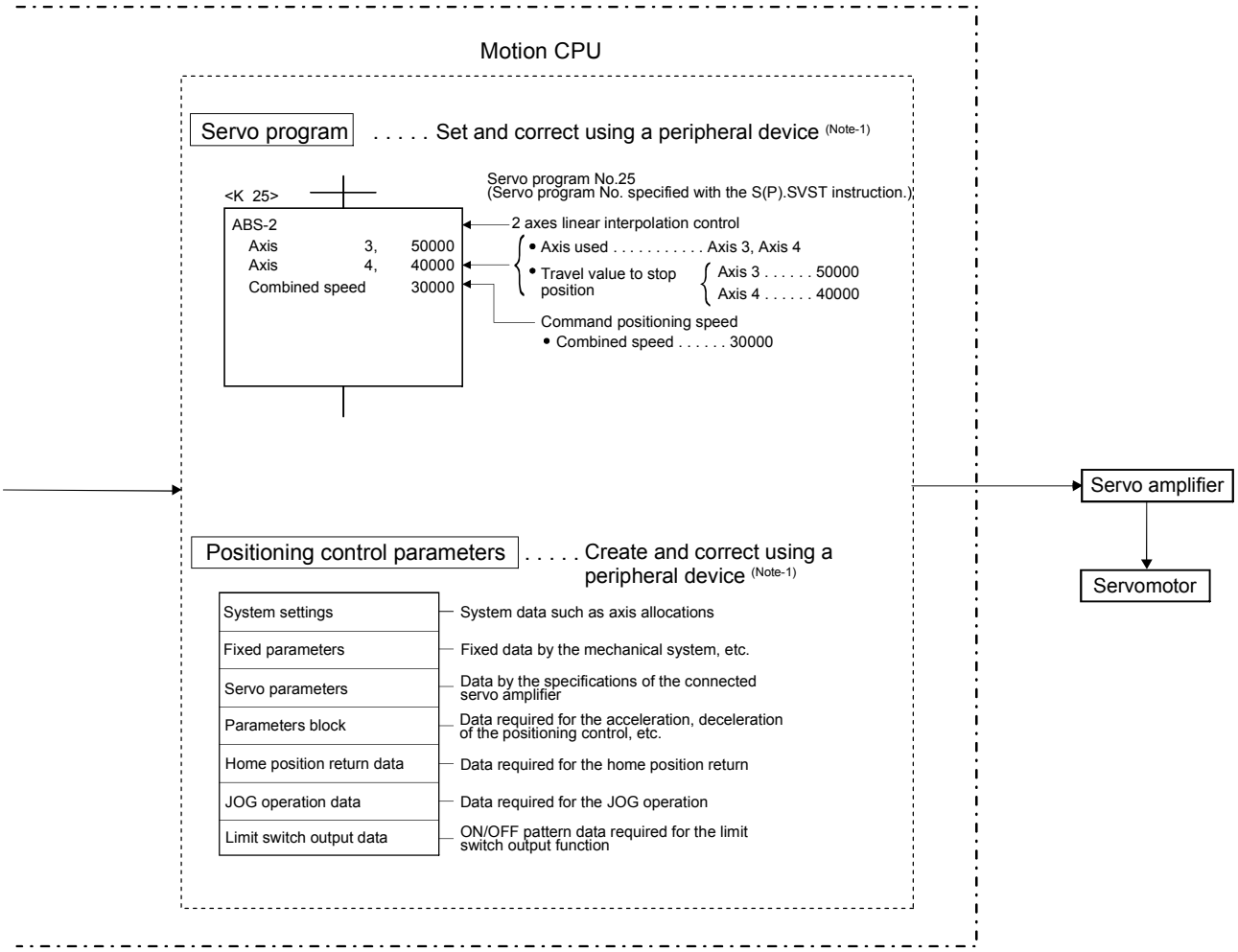

REMARK

(Note-1) : The following peripheral devices started by the SW6RN-GSV□P can be used.

• The personal computer by which WindowsNT® 4.0/Windows® 98/ Windows® 2000/Windows® XP works. (IBM PC/AT compatible)

WindowsNT® , Windows® are either registered trademarks or trademarks of Microsoft Corporation in the United States and/or other countries.

[Execution of the JOG operation]

JOG operation of specified axis is executed using the Motion SFC program in the Motion CPU. JOG operation can also be executed by controlling the JOG dedicated device of specified axis.
An overview of JOG operation is shown below.

Motion CPU control system

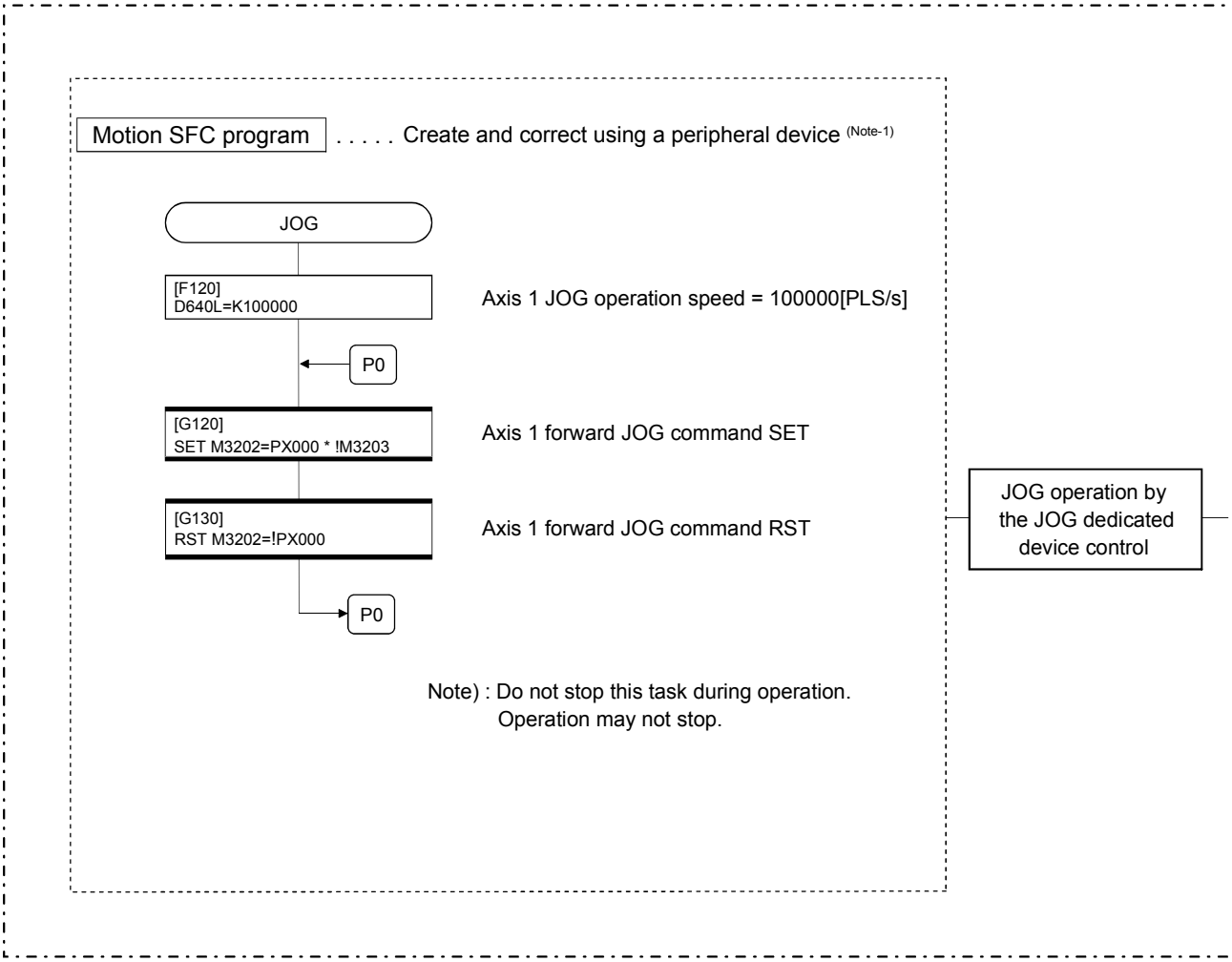

(1) Set the positioning control parameters using a peripheral device.

(2) Set the JOG speed to the JOG speed setting register for each axis using the Motion SFC program.

(3) Perform the JOG operation while the JOG start command signal is ON in the Motion SFC program.

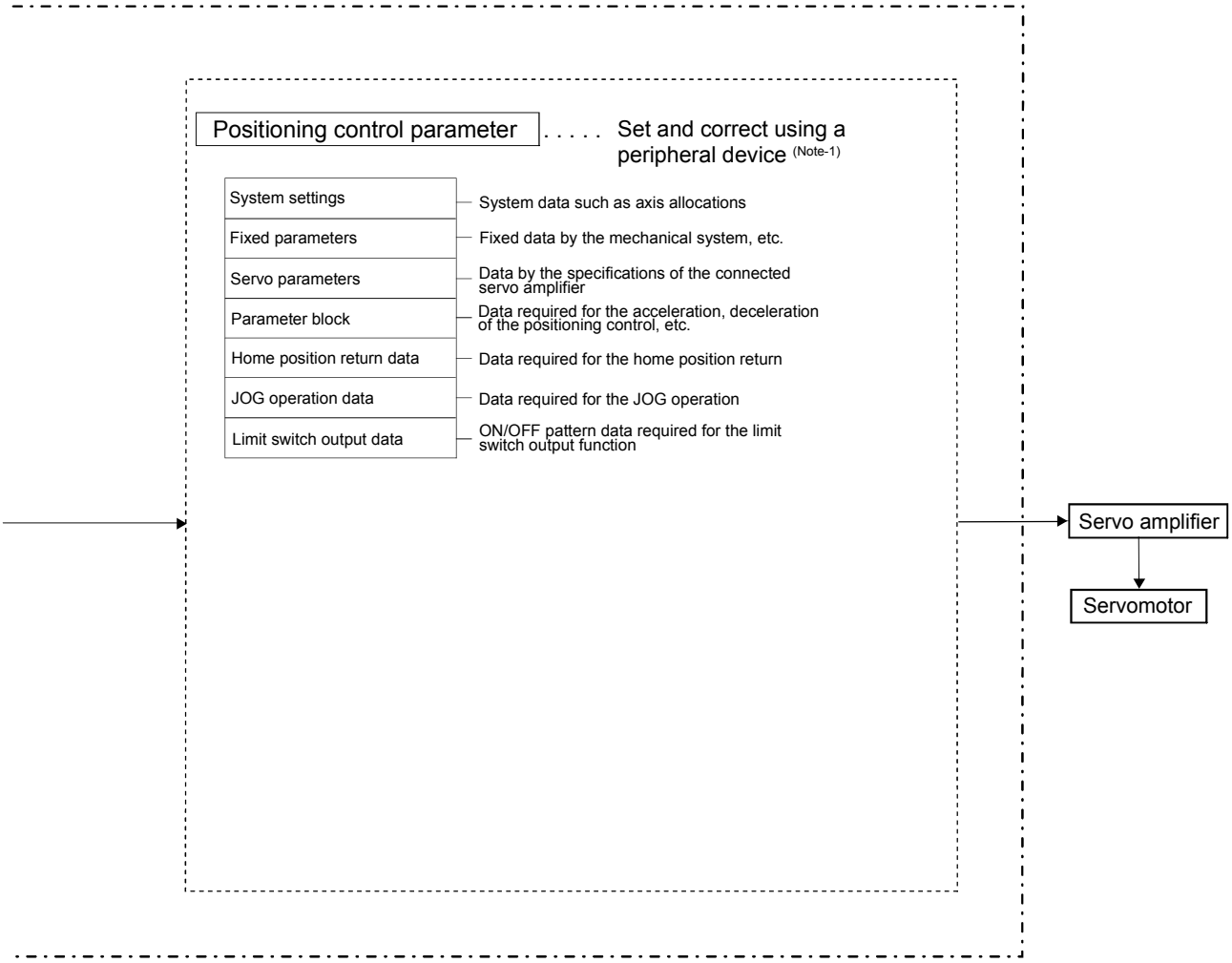

REMARK

(Note-1) : The following peripheral devices started by the SW6RN-GSV□P can be used.

- The personal computer by which WindowsNT® 4.0/Windows® 98/ Windows® 2000/Windows® XP works. (IBM PC/AT compatible)

WindowsNT® , Windows® are either registered trademarks or trademarks of Microsoft Corporation in the United States and/or other countries.

[Executing Manual Pulse Generator Operation]

When the positioning control is executed by the manual pulse generator connected to the Q173PX, manual pulse generator operation must be enabled using the Motion SFC program.
An overview of manual pulse generator operation is shown below.

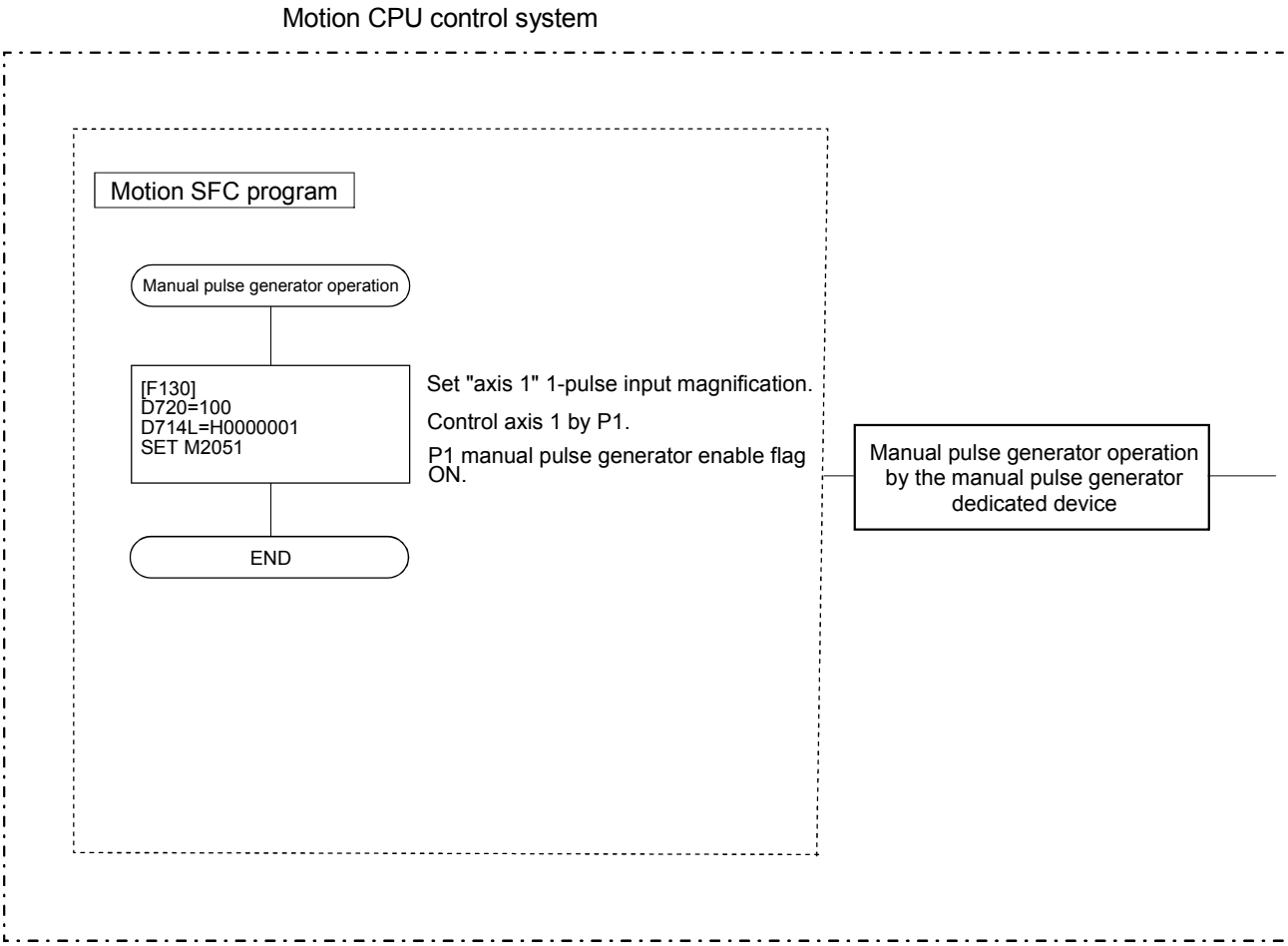

(1) Set the positioning control parameters using a peripheral device.

(2) Set the used manual pulse generator, operated axis No. and magnification for 1 pulse input using the Motion SFC program.

(3) Turn the manual pulse generator enable flag on using the Motion SFC program
..... Manual pulse generator operation enabled

(4) Perform the positioning by operating the manual pulse generator.

(5) Turn the manual pulse generator enable flag OFF using the Motion SFC program
..... Manual pulse generator operation completion

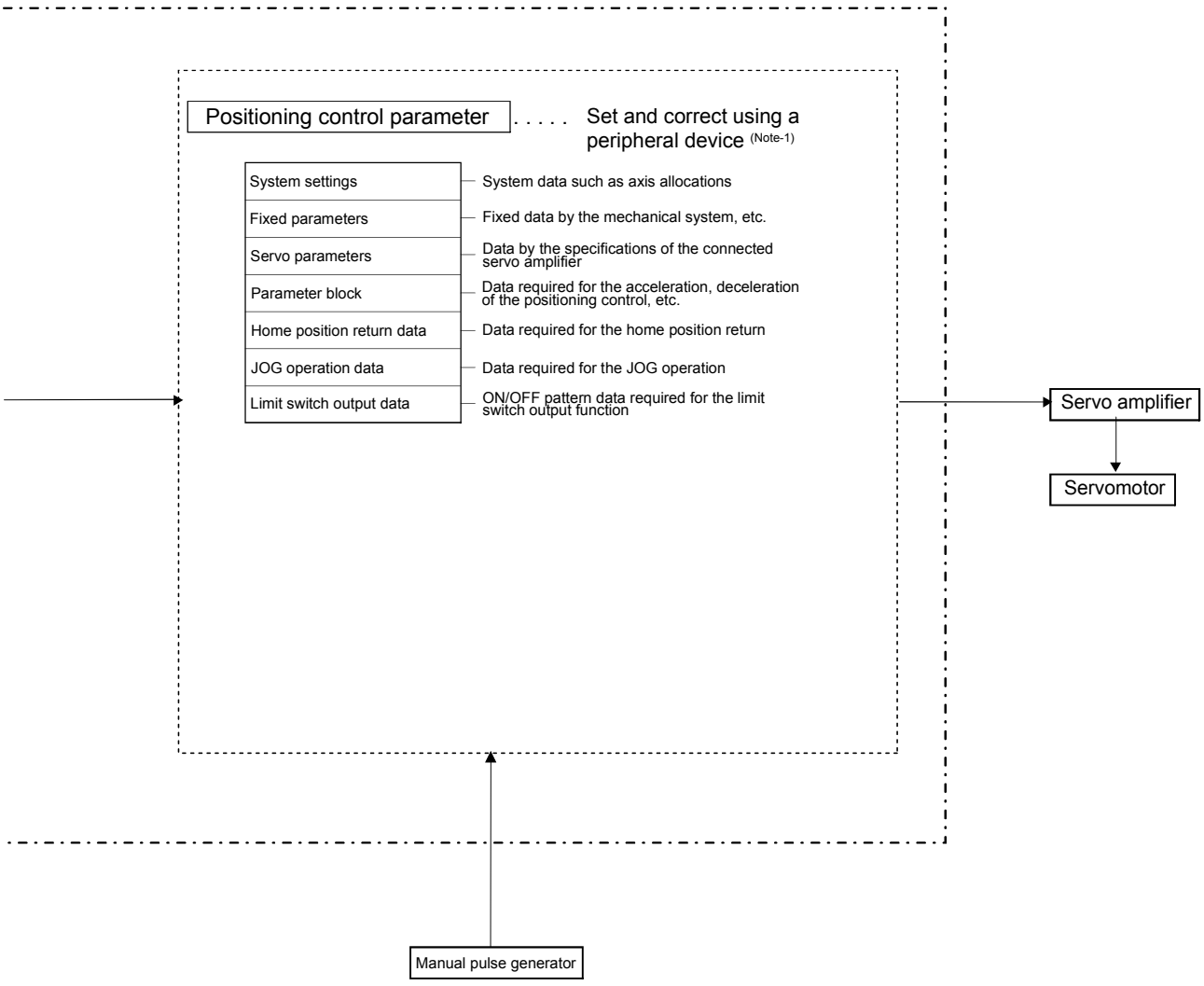

REMARK

(Note-1) : The following peripheral devices started by the SW6RN-GSV□P can be used.

- The personal computer by which WindowsNT® 4.0/Windows® 98/ Windows® 2000/Windows® XP works. (IBM PC/AT compatible)

WindowsNT® , Windows® are either registered trademarks or trademarks of Microsoft Corporation in the United States and/or other countries.

(1) Positioning control parameters

There are following seven types as positioning control parameters.
Parameter data can be set and corrected interactively using a peripheral device.

	Item	Description	Reference
1	System settings	Multiple system settings, Motion modules and axis No., etc. are set.	Section 4.1
2	Fixed parameters	Data by such as the mechanical system are set for every axis. They are used for calculation of a command position at the positioning control.	Section 4.2
3	Servo parameters	Data by such as the servo amplifier and motor type with connected servomotor are set for every axis. They are set to control the servomotors at the positioning control.	(Note-1)
4	Home position return data	Data such as the direction, method and speed of the home position return used at the positioning control are set for every axis.	Section 6.23.1
5	JOG operation data	Data such as the JOG speed limit value and parameter block No. used at the JOG operation are set for every axis.	Section 6.21.1
6	Parameter block	Data such as the acceleration, deceleration time and speed control value at the positioning control are set up to 16 parameter blocks. They are set with the servo program, JOG operation data and home position return data, and it is used to change easily the acceleration/deceleration processing (acceleration/deceleration time and speed limit value) at the positioning control.	Section 4.3
7	Limit switch output data	Output device, watch data, ON section, output enable/disable bit and forced output bit used for the limit output function for every limit output are set.	(Note-2)

(Note-1): Refer to Section 3.3 of the "Q173HCPU/Q172HCPU Motion controller Programming Manual (COMMON)".

(Note-2): Refer to Section 4.1 of the "Q173HCPU/Q172HCPU Motion controller Programming Manual (COMMON)".

(2) Servo program

The servo program is used for the positioning control in the Motion SFC program.
The positioning control by servo program is executed using the Motion SFC program and Motion dedicated PLC instruction (Servo program start request (S(P).SVST)) .
It comprises a program No., servo instructions and positioning data.
Refer to Chapter 5 for details.

- Program No. ..... It is specified using the Motion SFC program and Motion dedicated PLC instruction.
- Servo instruction ..... It indicates the type of positioning control.
- Positioning data ..... It is required to execute the servo instructions. The required data is fixed for every servo instruction.

(3) Motion SFC program

Motion SFC program is used to execute the operation sequence or transition control combining "Start", "Step", Transition", or "End" to the servo program.
The positioning control, JOG operation and manual pulse generator operation by the servo program can be executed.
Refer to the "Q173HCPU/Q172HCPU Motion controller (SV13/SV22) Programming Manual (Motion SFC)" for details.

(4) PLC program

The positioning control by the servo program can be executed using the Motion dedicated PLC instruction of PLC program.
Refer to the "Q173HCPU/Q172HCPU Motion controller (SV13/SV22) Programming Manual (Motion SFC)" for details.

MEMO

3. POSITIONING DEDICATED SIGNALS

The internal signals of the Motion CPU and the external signals to the Motion CPU are used as positioning signals.

(1) Internal signals

The following five devices of the Motion CPU are used as the internal signals of the Motion CPU.

- Internal relay (M) ..... M2000 to M3839 (1840 points)
- Special relay (SP.M) ..... M9073 to M9079 (7 points)
- Data register (D) ..... D0 to D799 (800 points)
- Motion register (#) ..... #8000 to #8191 (192 points)
- Special register (SP.D) ..... D9112 and D9180 to D9201 (23 points)

(2) External signals

The external input signals to the Motion CPU are shown below.

- Upper/lower limit switch input ..... The upper/lower limit of the positioning range is controlled.
- Stop signal ..... This signal makes the starting axis stop.
- Proximity dog signal ..... ON/OFF signal from the proximity dog.
- Speed/position switching signal ..... Signal for switching from speed to position.
- Manual pulse generator input ..... Signal from the manual pulse generator.

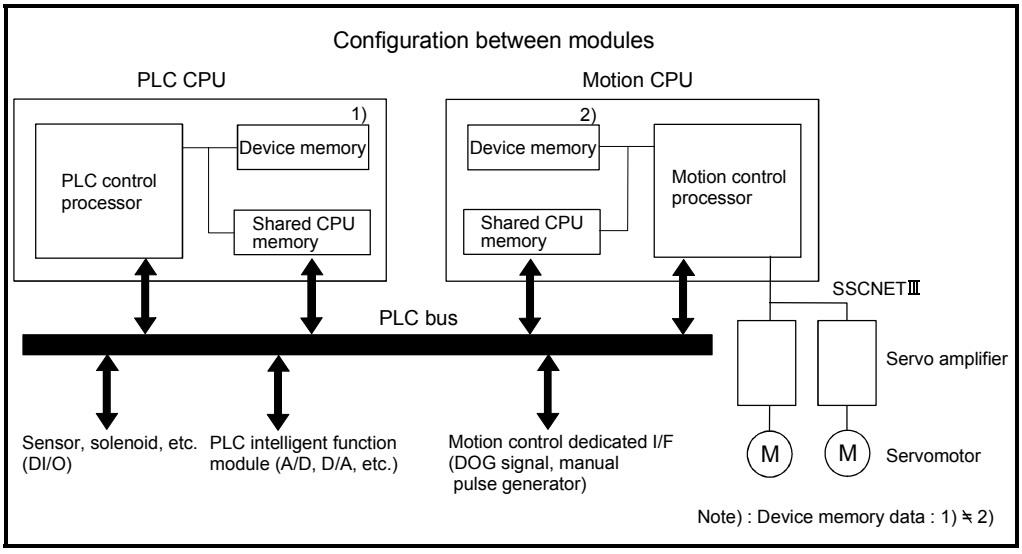

Fig.3.1 Flow of the internal signals/external signals

The positioning dedicated devices are shown below.
It indicates the device refresh cycle of the Motion CPU for status signal with the positioning control, and the device fetch cycle of the Motion CPU for command signal with the positioning control.
The operation cycle of the Motion CPU is shown below.

Item		Q173HCPU	Q172HCPU
Number of control axes		Up to 32 axes	Up to 8 axes
Operation cycle (Default)	SV13	0.44ms/ 1 to 3 axes 0.88ms/ 4 to 10 axes 1.77ms/11 to 20 axes 3.55ms/21 to 32 axes	0.44ms/ 1 to 3 axes 0.88ms/ 4 to 8 axes
	SV22	0.88ms/ 1 to 5 axes 1.77ms/ 6 to 14 axes 3.55ms/15 to 28 axes 7.11ms/29 to 32 axes	0.88ms/ 1 to 5 axes 1.77ms/ 6 to 8 axes

3.1 Internal Relays

(1) Internal relay list

SV13		SV22	
Device No.	Purpose	Device No.	Purpose
M0 to	User device (2000 points)	M0 to	User device (2000 points)
M2000 to	Common device (320 points)	M2000 to	Common device (320 points)
M2320 to	Special relay allocated device (Status) (80 points)	M2320 to	Special relay allocated device (Status) (80 points)
M2400 to	Axis status (20 points × 32 axes)	M2400 to	Axis status (20 points × 32 axes) Real mode……Each axis Virtual mode….Output module
M3040 to	Unusable (32 points)	M3040 to	Unusable (32 points)
M3072 to	Common device (Command signal) (64 points)	M3072 to	Common device (Command signal) (64 points)
M3136 to	Special relay allocated device (Command signal) (64 points)	M3136 to	Special relay allocated device (Command signal) (64 points)
M3200 to	Axis command signal (20 points × 32 axes)	M3200 to	Axis command signal (20 points × 32 axes) Real mode……Each axis Virtual mode….Output module

Internal relay list (Continued)

SV13		SV22	
Device No.	Purpose	Device No.	Purpose
M3840	User device (4352 points)	M3840 to M4000	Unusable (Note) (160 points)
		M4000 to M4640	User device (Note) (640 points)
		M4640 to M4688	Synchronous encoder axis status (4 points × 12 axes)
		M4688 to M4800	Unusable (Note) (112 points)
to		M4800 to M5440	User device (Note) (640 points)
		M5440 to M5488	Synchronous encoder axis command signal (4 points × 12 axes)
		M5488 to M5600	Unusable (Note) (112 points)
M8191		M5600 to M8191	User device (2592 points)

☐ It can be used as an user device.

(Note): It can be used as an user device in the SV22 real mode only.

POINT

• Total number of user device points

6352 points (SV13) / 6256 points (SV22 real mode only)

(2) Axis status list

Axis No.	Device No.
1	M2400 to M2419
2	M2420 to M2439
3	M2440 to M2459
4	M2460 to M2479
5	M2480 to M2499
6	M2500 to M2519
7	M2520 to M2539
8	M2540 to M2559
9	M2560 to M2579
10	M2580 to M2599
11	M2600 to M2619
12	M2620 to M2639
13	M2640 to M2659
14	M2660 to M2679
15	M2680 to M2699
16	M2700 to M2719
17	M2720 to M2739
18	M2740 to M2759
19	M2760 to M2779
20	M2780 to M2799
21	M2800 to M2819
22	M2820 to M2839
23	M2840 to M2859
24	M2860 to M2879
25	M2880 to M2899
26	M2900 to M2919
27	M2920 to M2939
28	M2940 to M2959
29	M2960 to M2979
30	M2980 to M2999
31	M3000 to M3019
32	M3020 to M3039

Signal name

	Signal name		Refresh cycle	Fetch cycle	Signal direction
0	Positioning start complete		Operation cycle		Status signal
1	Positioning complete				
2	In-position				
3	Command in-position				
4	Speed controlling				
5	Speed/position switching latch				
6	Zero pass				
7	Error detection		Immediate		
8	Servo error detection		Operation cycle		
9	Home position return request		Main cycle		
10	Home position return complete		Operation cycle		
11	External signals	FLS	Main cycle		
12		RLS			
13		STOP			
14		DOG/CHANGE			
15	Servo ready		Operation cycle		
16	Torque limiting				
17	Unusable		—	—	—
18	Virtual mode continuation operation disable warning signal (SV22) (Note-1)		At virtual mode transition		Status signal
19	M-code outputting signal		Operation cycle		

(Note-1): It is unusable in the SV13/SV22 real mode.
(Note-2): The range of axis No.1 to 8 is valid in the Q172HCPU.
(Note-3): Device area of 9 axes or more is unusable in the Q172HCPU.

(3) Axis command signal list

Axis No.	Device No.
1	M3200 to M3219
2	M3220 to M3239
3	M3240 to M3259
4	M3260 to M3279
5	M3280 to M3299
6	M3300 to M3319
7	M3320 to M3339
8	M3340 to M3359
9	M3360 to M3379
10	M3380 to M3399
11	M3400 to M3419
12	M3420 to M3439
13	M3440 to M3459
14	M3460 to M3479
15	M3480 to M3499
16	M3500 to M3519
17	M3520 to M3539
18	M3540 to M3559
19	M3560 to M3579
20	M3580 to M3599
21	M3600 to M3619
22	M3620 to M3639
23	M3640 to M3659
24	M3660 to M3679
25	M3680 to M3699
26	M3700 to M3719
27	M3720 to M3739
28	M3740 to M3759
29	M3760 to M3779
30	M3780 to M3799
31	M3800 to M3819
32	M3820 to M3839

Signal name

	Signal name	Refresh cycle	Fetch cycle	Signal direction
0	Stop command		Operation cycle	Command signal
1	Rapid stop command			
2	Forward rotation JOG start command		Main cycle	
3	Reverse rotation JOG start command			
4	Complete signal OFF command			
5	Speed/position switching enable command		Operation cycle	
6	Unusable	—	—	—
7	Error reset command		Main cycle	Command signal
8	Servo error reset command			
9	External stop input disable at start command		At start	
10	Unusable	—	—	—
11				
12	Feed current value update request command		At start	Command signal
13	Address clutch reference setting command (SV22 only) (Note-1)		At virtual mode transition	
14	Cam reference position setting command (SV22 only) (Note-1)			
15	Servo OFF command		Operation cycle	
16	Gain changing command		Operation cycle (Note-4)	
17	Unusable	—	—	—
18	Control loop changing command		Operation cycle	Command signal
19	FIN signal			

(Note-1): It is unusable in the SV13/SV22 real mode.
(Note-2): The range of axis No.1 to 8 is valid in the Q172HCPU.
(Note-3): Device area of 9 axes or more is unusable in the Q172HCPU.
(Note-4): Operation cycle 7.1[ms] or more: Every 3.5[ms]

(4) Common device list

Device No.	Signal name	Refresh cycle	Fetch cycle	Signal direction	Remark (Note-5)
M2000	PLC ready flag		Main cycle	Command signal (Note-4)	M3072
M2001	Axis 1	Operation cycle		Status signal (Note-1), (Note-2)	
M2002	Axis 2				
M2003	Axis 3				
M2004	Axis 4				
M2005	Axis 5				
M2006	Axis 6				
M2007	Axis 7				
M2008	Axis 8				
M2009	Axis 9				
M2010	Axis 10				
M2011	Axis 11				
M2012	Axis 12				
M2013	Axis 13				
M2014	Axis 14				
M2015	Axis 15				
M2016	Axis 16				
M2017	Axis 17				
M2018	Axis 18				
M2019	Axis 19				
M2020	Axis 20				
M2021	Axis 21				
M2022	Axis 22				
M2023	Axis 23				
M2024	Axis 24				
M2025	Axis 25				
M2026	Axis 26				
M2027	Axis 27				
M2028	Axis 28				
M2029	Axis 29				
M2030	Axis 30				
M2031	Axis 31				
M2032	Axis 32				
M2033	Unusable	—	—	—	—
M2034	Personal computer link communication error flag	Operation cycle		Status signal	
M2035	Motion SFC error history clear request flag (Note-6)		Main cycle	Command signal	M3080
M2036	Unusable (3 points)	—	—	—	—
M2037					
M2038					
M2039	Motion SFC error detection flag		Immediate	Status signal	
M2040	Speed switching point specified flag		At start	Command signal (Note-4)	M3073
M2041	System setting error flag	Operation cycle		Status signal	
M2042	All axes servo ON command		Operation cycle	Command signal (Note-4)	M3074
M2043	Real/virtual mode switching request (SV22)		At virtual mode transition		M3075
M2044	Real/virtual mode switching status (SV22)	At virtual mode transition		Status signal	
M2045	Real/virtual mode switching error detection signal (SV22)				
M2046	Out-of-sync warning (SV22)				
M2047	Motion slot fault detection flag	Operation cycle			
M2048	JOG operation rsimultaneous start command		Main cycle	Command signal (Note-4)	M3076
M2049	All axes servo ON accept flag	Operation cycle		Status signal	
M2050	Start buffer full				
M2051	Manual pulse generator 1 enable flag		Main cycle	Command signal (Note-4)	M3077
M2052	Manual pulse generator 2 enable flag				M3078

Device No.	Signal name	Refresh cycle	Fetch cycle	Signal direction	Remark (Note-5)
M2053	Manual pulse generator 3 enable flag		Main cycle	Command signal (Note-4)	M3079
M2054	Operation cycle over flag	Operation cycle		Status signal	
M2055	Unusable (6 points)	—	—	—	—
M2056					
M2057					
M2058					
M2059					
M2060					
M2061	Axis 1	Operation cycle		Status signal (Note-1), (Note-2)	
M2062	Axis 2				
M2063	Axis 3				
M2064	Axis 4				
M2065	Axis 5				
M2066	Axis 6				
M2067	Axis 7				
M2068	Axis 8				
M2069	Axis 9				
M2070	Axis 10				
M2071	Axis 11				
M2072	Axis 12				
M2073	Axis 13				
M2074	Axis 14				
M2075	Axis 15				
M2076	Axis 16				
M2077	Axis 17				
M2078	Axis 18				
M2079	Axis 19				
M2080	Axis 20				
M2081	Axis 21				
M2082	Axis 22				
M2083	Axis 23				
M2084	Axis 24				
M2085	Axis 25				
M2086	Axis 26				
M2087	Axis 27				
M2088	Axis 28				
M2089	Axis 29				
M2090	Axis 30				
M2091	Axis 31				
M2092	Axis 32				
M2093	Unusable (8 points)	—	—	—	—
M2094					
M2095					
M2096					
M2097					
M2098					
M2099					
M2100					
M2101	Axis 1	Operation cycle		Status signal (Note-1), (Note-2)	
M2102	Axis 2				
M2103	Axis 3				
M2104	Axis 4				
M2105	Axis 5				
M2106	Axis 6				
M2107	Axis 7				
M2108	Axis 8				
M2109	Axis 9				
M2110	Axis 10				
M2111	Axis 11				
M2112	Axis 12				
M2113	Unusable (6 points)	—	—	—	—
M2114					
M2115					
M2116					
M2117					
M2118					

Speed changing flag

Synchronous encoder current value changing flag (Note-3) (12 axes)

Common device list (Continued)

Device No.	Signal name				Refresh cycle	Fetch cycle	Signal direction	Remark (Note-5)
M2119	Unusable (9 points)				—	—	—	—
M2120								
M2121								
M2122								
M2123								
M2124								
M2125								
M2126								
M2127								
M2128	Axis 1	Automatic deceleration flag			Operation cycle		Status signal (Note-1), (Note-2)	
M2129	Axis 2							
M2130	Axis 3							
M2131	Axis 4							
M2132	Axis 5							
M2133	Axis 6							
M2134	Axis 7							
M2135	Axis 8							
M2136	Axis 9							
M2137	Axis 10							
M2138	Axis 11							
M2139	Axis 12							
M2140	Axis 13							
M2141	Axis 14							
M2142	Axis 15							
M2143	Axis 16							
M2144	Axis 17							
M2145	Axis 18							
M2146	Axis 19							
M2147	Axis 20							
M2148	Axis 21							
M2149	Axis 22							
M2150	Axis 23							
M2151	Axis 24							
M2152	Axis 25							
M2153	Axis 26							
M2154	Axis 27							
M2155	Axis 28							
M2156	Axis 29							
M2157	Axis 30							
M2158	Axis 31							
M2159	Axis 32							
M2160	Output axis 1	Main shaft side	Clutch status (SV22) (Note-3)					
M2161		Auxiliary input side						
M2162	Output axis 2	Main shaft side						
M2163		Auxiliary input side						
M2164	Output axis 3	Main shaft side						
M2165		Auxiliary input side						
M2166	Output axis 4	Main shaft side						
M2167		Auxiliary input side						
M2168	Output axis 5	Main shaft side						
M2169		Auxiliary input side						
M2170	Output axis 6	Main shaft side						
M2171		Auxiliary input side						
M2172	Output axis 7	Main shaft side						
M2173		Auxiliary input side						
M2174	Output axis 8	Main shaft side						
M2175		Auxiliary input side						
M2176	Output axis 9	Main shaft side						
M2177		Auxiliary input side						
M2178	Output axis 10	Main shaft side						
M2179		Auxiliary input side						

Device No.	Signal name				Refresh cycle	Fetch cycle	Signal direction	Remark (Note-5)
M2180	Output axis 11	Main shaft side	Clutch status (SV22) (Note-3)		Operation cycle		Status signal (Note-1), (Note-2)	
M2181		Auxiliary input side						
M2182	Output axis 12	Main shaft side						
M2183		Auxiliary input side						
M2184	Output axis 13	Main shaft side						
M2185		Auxiliary input side						
M2186	Output axis 14	Main shaft side						
M2187		Auxiliary input side						
M2188	Output axis 15	Main shaft side						
M2189		Auxiliary input side						
M2190	Output axis 16	Main shaft side						
M2191		Auxiliary input side						
M2192	Output axis 17	Main shaft side						
M2193		Auxiliary input side						
M2194	Output axis 18	Main shaft side						
M2195		Auxiliary input side						
M2196	Output axis 19	Main shaft side						
M2197		Auxiliary input side						
M2198	Output axis 20	Main shaft side						
M2199		Auxiliary input side						
M2200	Output axis 21	Main shaft side						
M2201		Auxiliary input side						
M2202	Output axis 22	Main shaft side						
M2203		Auxiliary input side						
M2204	Output axis 23	Main shaft side						
M2205		Auxiliary input side						
M2206	Output axis 24	Main shaft side						
M2207		Auxiliary input side						
M2208	Output axis 25	Main shaft side						
M2209		Auxiliary input side						
M2210	Output axis 26	Main shaft side						
M2211		Auxiliary input side						
M2212	Output axis 27	Main shaft side						
M2213		Auxiliary input side						
M2214	Output axis 28	Main shaft side						
M2215		Auxiliary input side						
M2216	Output axis 29	Main shaft side						
M2217		Auxiliary input side						
M2218	Output axis 30	Main shaft side						
M2219		Auxiliary input side						
M2220	Output axis 31	Main shaft side						
M2221		Auxiliary input side						
M2222	Output axis 32	Main shaft side						
M2223		Auxiliary input side						
M2224	Unusable (5 points)				—	—	—	—
M2225								
M2226								
M2227								
M2228								

Common device list (Continued)

Device No.	Signal name		Refresh cycle	Fetch cycle	Signal direction	Remark (Note-5)
M2229	Unusable (11 points)		—	—	—	—
M2230						
M2231						
M2232						
M2233						
M2234						
M2235						
M2236						
M2237						
M2238						
M2239						
M2240	Axis 1	Speed change "0" accepting flag	Operation cycle		Status signal (Note-1), (Note-2)	
M2241	Axis 2					
M2242	Axis 3					
M2243	Axis 4					
M2244	Axis 5					
M2245	Axis 6					
M2246	Axis 7					
M2247	Axis 8					
M2248	Axis 9					
M2249	Axis 10					
M2250	Axis 11					
M2251	Axis 12					
M2252	Axis 13					
M2253	Axis 14					
M2254	Axis 15					
M2255	Axis 16					
M2256	Axis 17					
M2257	Axis 18					
M2258	Axis 19					
M2259	Axis 20					
M2260	Axis 21					
M2261	Axis 22					
M2262	Axis 23					
M2263	Axis 24					
M2264	Axis 25					
M2265	Axis 26					
M2266	Axis 27					
M2267	Axis 28					
M2268	Axis 29					
M2269	Axis 30					
M2270	Axis 31					
M2271	Axis 32					
M2272	Axis 1	Control loop monitor status	Operation cycle		Status signal (Note-1), (Note-2)	
M2273	Axis 2					
M2274	Axis 3					
M2275	Axis 4					

Device No.	Signal name		Refresh cycle	Fetch cycle	Signal direction	Remark (Note-5)
M2276	Axis 5	Control loop monitor status	Operation cycle		Status signal (Note-1), (Note-2)	
M2277	Axis 6					
M2278	Axis 7					
M2279	Axis 8					
M2280	Axis 9					
M2281	Axis 10					
M2282	Axis 11					
M2283	Axis 12					
M2284	Axis 13					
M2285	Axis 14					
M2286	Axis 15					
M2287	Axis 16					
M2288	Axis 17					
M2289	Axis 18					
M2290	Axis 19					
M2291	Axis 20					
M2292	Axis 21					
M2293	Axis 22					
M2294	Axis 23					
M2295	Axis 24					
M2296	Axis 25					
M2297	Axis 26					
M2298	Axis 27					
M2299	Axis 28					
M2300	Axis 29					
M2301	Axis 30					
M2302	Axis 31					
M2303	Axis 32					
M2304	Unusable (16 points)		—	—	—	—
M2305						
M2306						
M2307						
M2308						
M2309						
M2310						
M2311						
M2312						
M2313						
M2314						
M2315						
M2316						
M2317						
M2318						
M2319						

Explanation of the request register

No.	Function	Bit device	Request register
1	PLC ready flag	M2000	D704
2	Speed switching point specified flag	M2040	D705
3	All axes servo ON command	M2042	D706
4	Real/virtual mode switching request (SV22)	M2043	D707
5	JOG operation simultaneous start command	M2048	D708
6	Manual pulse generator 1 enable flag	M2051	D755
7	Manual pulse generator 2 enable flag	M2052	D756
8	Manual pulse generator 3 enable flag	M2053	D757

(Note-1): The range of axis No.1 to 8 is valid in the Q172HCPU.
(Note-2): Device area of 9 axes or more is unusable in the Q172HCPU.
(Note-3): This signal is unusable in the SV13/SV22 real mode.
(Note-4): Handling of D704 to D708 and D755 to D757 registers
Because cannot be turn ON/OFF for every bit from the PLC CPU, the above bit devices are assigned to D register, and each bit device becomes on with the lowest rank bit 0 → 1 of each register, and each bit device becomes off with 1 → 0.
Use it when the above functions are requested from the PLC CPU using the S(P).DDRD and S(P).DDWR instruction. Refer to the "Q173HCPU/Q172HCPU Motion controller (SV13/SV22) Programming Manual (Motion SFC)" for the S(P).DDRD and S(P).DDWR instruction.
The direct bit device ON/OFF is possible in the Motion SFC program.
(Note-5): It can also be ordered the device of a remark column.
(Note-6): M3080 does not turn off automatically. Turn it off as an user side.

⚠ CAUTION

● The data executed later becomes effective when the same device is executed in the Motion SFC program and PLC program.

(5) Special relay allocated device list (Status)

Device No.	Signal name	Refresh cycle	Fetch cycle	Signal direction	Remark (Note)
M2320	Fuse blown detection	Error occurrence		Status signal	M9000
M2321	AC/DC DOWN detection				M9005
M2322	Battery low				M9006
M2323	Battery low latch				M9007
M2324	Self-diagnostic error				M9008
M2325	Diagnostic error				M9010
M2326	Always ON	Main operation			M9036
M2327	Always OFF				M9037
M2328	Clock data error	Error occurrence			M9026
M2329	PCPU WDT error flag				M9073
M2330	PCPU READY complete flag	At request			M9074
M2331	Test mode ON flag				M9075
M2332	External forced stop input flag	Operation cycle			M9076
M2333	Manual pulse generator axis setting error flag	Error occurrence			M9077
M2334	TEST mode request error flag				M9078
M2335	Servo program setting error flag				M9079
M2336	CPU No.1 reset flag	At status change			M9240
M2337	CPU No.2 reset flag				M9241
M2338	CPU No.3 reset flag				M9242
M2339	CPU No.4 reset flag				M9243
M2340	CPU No.1 error flag				M9244
M2341	CPU No.2 error flag				M9245
M2342	CPU No.3 error flag				M9246
M2343	CPU No.4 error flag				M9247
M2344	Unusable	—	—	—	—
M2345	CPU No.1 MULTR complete flag	At instruction completion		Status signal	M9216
M2346	CPU No.2 MULTR complete flag				M9217
M2347	CPU No.3 MULTR complete flag				M9218
M2348	CPU No.4 MULTR complete flag				M9219
M2349 to M2399	Unusable (51 points)	—	—	—	—

(Note): The same status as a remark column is output.

(6) Common device list (Command signal)

Device No.	Signal name	Refresh cycle	Fetch cycle	Signal direction	Remark (Note-1), (Note-2)
M3072	PLC ready flag		Main cycle	Command signal	M2000
M3073	Speed switching point specified flag		At start		M2040
M3074	All axes servo ON command		Operation cycle		M2042
M3075	Real/virtual mode switching request (SV22)		At virtual mode transition		M2043
M3076	JOG operation simultaneous start command		Main cycle		M2048
M3077	Manual pulse generator 1 enable flag				M2051
M3078	Manual pulse generator 2 enable flag				M2052
M3079	Manual pulse generator 3 enable flag				M2053
M3080	Motion SFC error history clear request flag (Note-3)				M2035
M3081 to M3135	Unusable (55 points)	—	—	—	—

(Note-1): The device of a remarks column turns ON by OFF to ON of the above device, and the device of a remarks column turns OFF by ON to OFF of the above device. The state of a device is not in agreement when the device of a remarks column is turned on directly. In addition, when the request from a data register and the request from the above device are performed simultaneously, the request from the above device becomes effective.

(Note-2): It can also be ordered the device of a remark column.

(Note-3): M3080 does not turn off automatically. Turn it off as an user side.

(7) Special relay allocated device list (Command signal)

Device No.	Signal name	Refresh cycle	Fetch cycle	Signal direction	Remark (Note-1), (Note-2)
M3136	Clock data set request		Main cycle	Command signal	M9025
M3137	Clock data read request				M9028
M3138	Error reset				M9060
M3139 to M3199	Unusable (61 points)	—	—	—	—

(Note-1): The device of a remarks column turns ON by OFF to ON of the above device, and the device of a remarks column turns OFF by ON to OFF of the above device. The state of a device is not in agreement when the device of a remarks column is turned on directly.

(Note-2): It can also be ordered the device of a remark column.

3.1.1 Axis statuses

(1) Positioning start complete signal (M2400+20n) ..... Status signal

(a) This signal turns on with the start completion for the positioning control of the axis specified with the servo program. It does not turn on at the starting using JOG operation or manual pulse generator operation.
It can be used to read a M-code at the positioning start.
(Refer to Section 7.1.)

(b) This signal turns off at turning the complete signal OFF command (M3204+20n) off to on or positioning completion.

When the complete signal OFF command (M3204+20n) turns off to on.

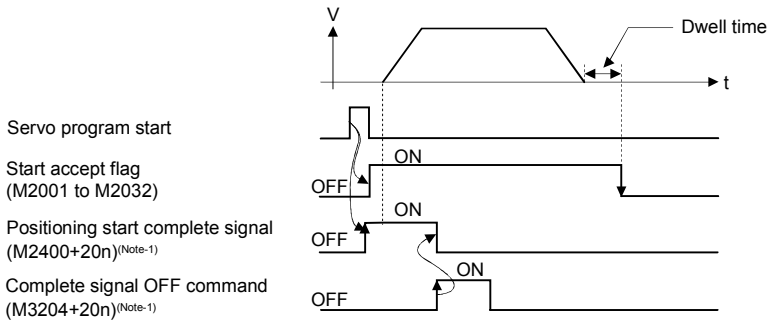

When the positioning is completed.

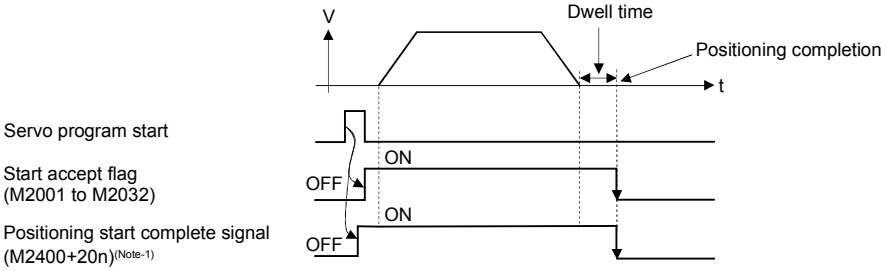

REMARK

(Note-1): In the above descriptions, "n" in "M3204+20n", etc. indicates a value corresponding to axis No. such as the following tables.

Axis No.	n	Axis No.	n	Axis No.	n	Axis No.	n
1	0	9	8	17	16	25	24
2	1	10	9	18	17	26	25
3	2	11	10	19	18	27	26
4	3	12	11	20	19	28	27
5	4	13	12	21	20	29	28
6	5	14	13	22	21	30	29
7	6	15	14	23	22	31	30
8	7	16	15	24	23	32	31

• Calculate as follows for the device No. corresponding to each axis.
(Example) M3200+20n (Stop command)=M3200+20×31=M3820
M3215+20n (Servo OFF) =M3215+20×31=M3835

• The range (n=0 to 7) of axis No.1 to 8 is valid in the Q172HCPU.

(2) Positioning complete signal (M2401+20n) .....Status signal

(a) This signal turns on with the completion for the positioning control of the axis specified with the servo program.
It does not turn on at the start or stop on the way using home position return, JOG operation, manual pulse generator operation or speed control.
It does not turn on at the stop on the way during positioning.
It can be used to read a M-code at the positioning completion.
(Refer to Section 7.1.)

(b) This signal turns off at turning the complete signal OFF command (M3204+20n) off to on or positioning start.

When the complete signal OFF command (M3204+20n) turns off to on.

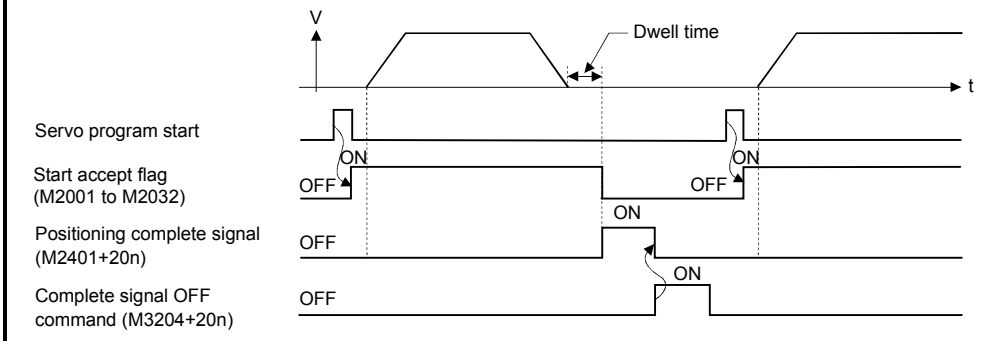

When the next positioning starts.

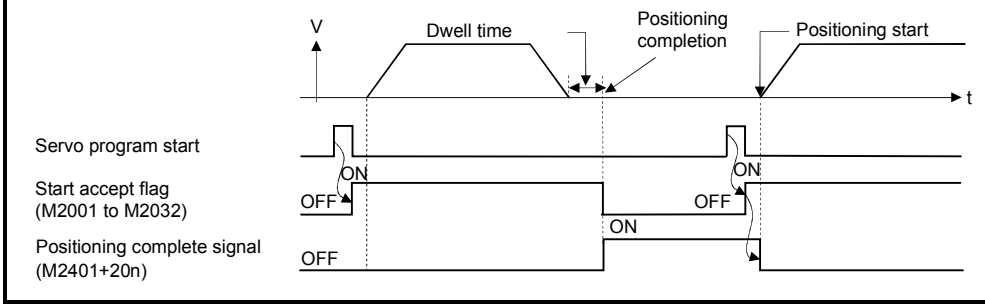

(3) In-position signal (M2402+20n) .....Status signal

(a) This signal turns on when the number of droop pulses in the deviation counter becomes below the "in-position range" set in the servo parameters.
It turns off at the start.

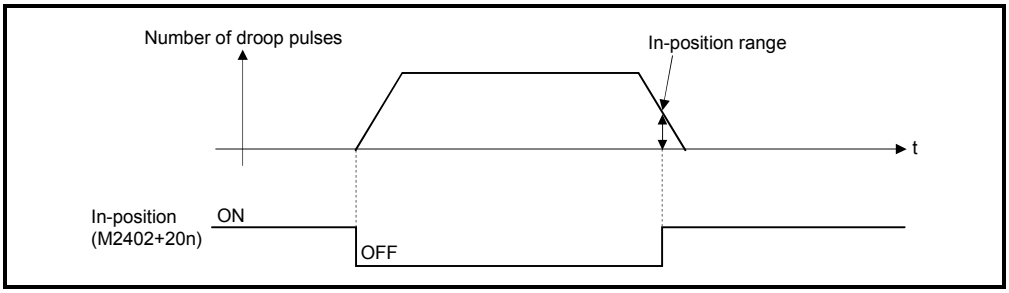

(b) An in-position check is performed in the following cases.
- When the servo power supply is turned on.
- After the automatic deceleration is started during positioning control.
- After the deceleration is started with the JOG start signal OFF.
- During the manual pulse generator operation.
- After the proximity dog ON during a home position return.
- After the deceleration is started with the stop command.
- When the speed change to a speed "0" is executed.

(4) Command in-position signal (M2403+20n) .....Status signal

(a) This signal turns on when the absolute value of difference between the command position and feed current value becomes below the "command in-position range" set in the fixed parameters.
This signal turns off in the following cases.
- Positioning control start
- Home position return
- Speed control
- JOG operation
- Manual pulse generator operation

(b) Command in-position check is continually executed during position control. This check is not executed during speed control or speed control in the speed/position switching control.

(c)

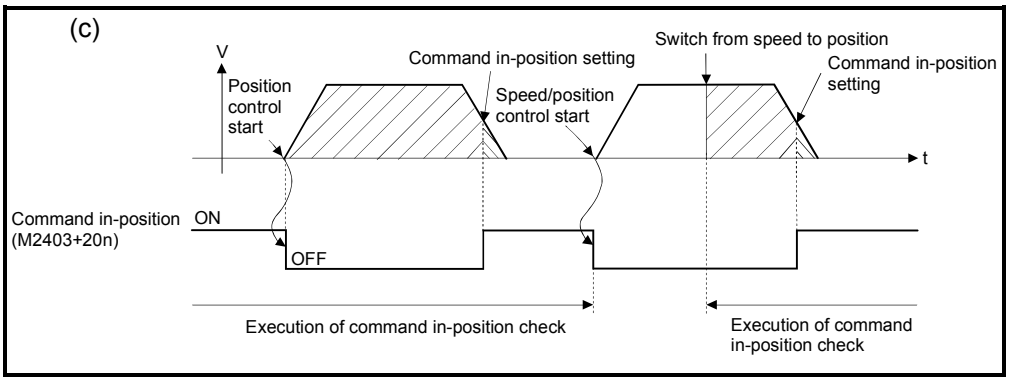

(5) Speed controlling signal (M2404+20n) .....Status signal

(a) This signal turns on during speed control, and it is used as judgement of during the speed control or position control.
It is turning on while the switching from speed control to position control by the external CHANGE signal at the speed/position switching control.

(b) This signal turns off at the power supply on and during position control.

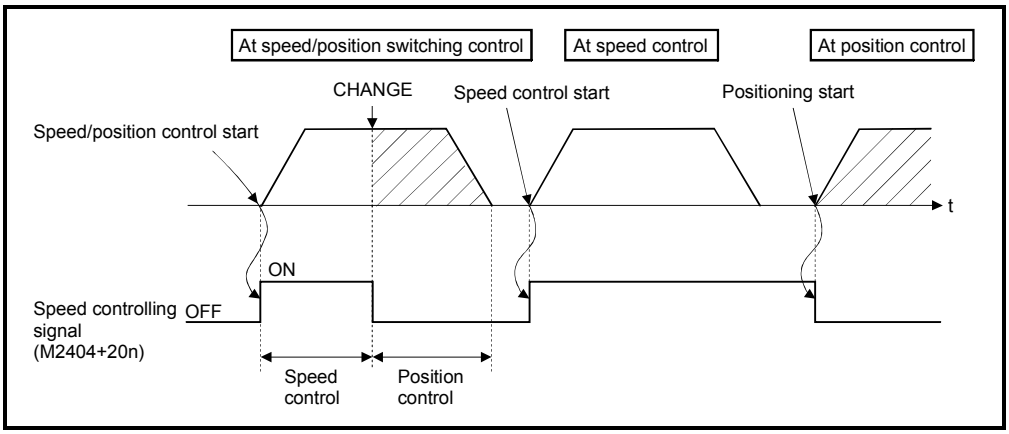

(6) Speed/position switching latch signal (M2405+20n)

.....Status signal

(a) This signal turns on when the control is switched from speed control to position control.
It can be used as an interlock signal to enable or disable changing of the travel value in position control.

(b) The signal turns off at the following start.
- Position control
- Speed/position control
- Speed control
- JOG operation
- Manual pulse generator operation

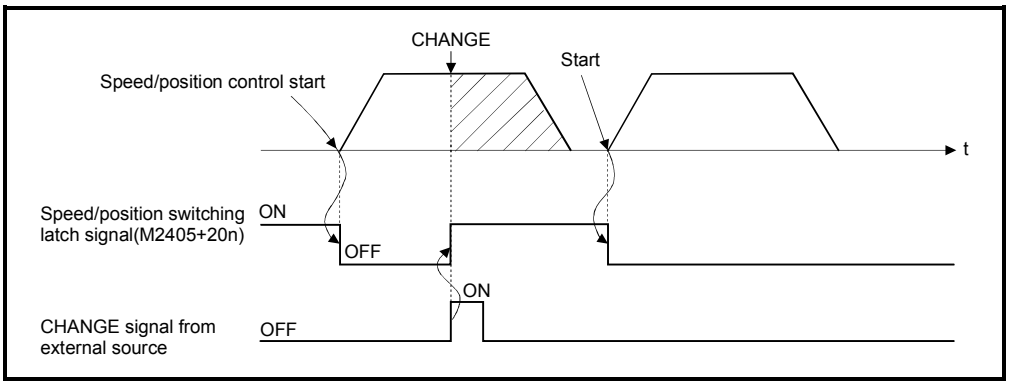

(7) Zero pass signal (M2406+20n) .....Status signal

This signal turns on when the zero point is passed after the power supply on of the servo amplifier.
Once the zero point has been passed, it remains on state until the CPU has been reset.
However, in the home position return method of proximity dog, count, dog cradle or limit switch combined type, this signal turns off once at the home position return start and turns on again at the next zero point passage.

(8) Error detection signal (M2407+20n) .....Status signal

(a) This signal turns on with detection of a minor error or major error, and it is used as judgement of the error available/not available.
The applicable error code (Note-1) is stored in the minor error code storage register with detection of a minor error. (Refer to Section 3.2.1)
The applicable error code (Note-2) is stored in the major error code storage register with detection of a major error. (Refer to Section 3.2.1)

(b) This signal turns off when the error reset command (M3207+20n) turns on.

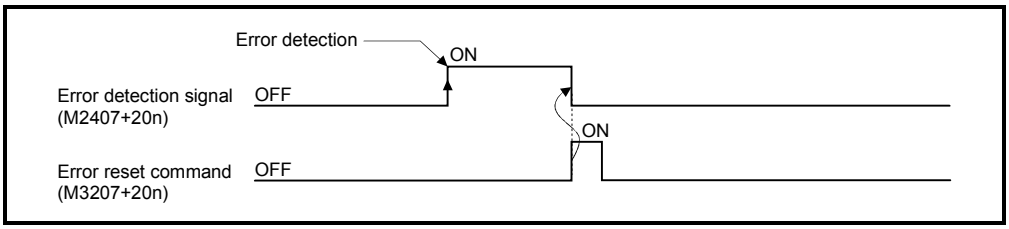

REMARK

(Note-1): Refer to APPENDIX 1.2 for the error codes with detection of minor errors.
(Note-2): Refer to APPENDIX 1.3 for the error codes with detection of major errors.

(9) Servo error detection signal (M2408+20n) .....Status signal

(a) This signal turns on when an error occurs at the servo amplifier side (except for errors cause of alarms and emergency stops) (Note-1), and it is used as judgement of the servo error available/not available.
When an error is detected at the servo amplifier side, the applicable error code (Note-1) is stored in the servo error code storage register. (Refer to Section 3.2.1)

(b) This signal turns off when the servo error reset command (M3208+20n) turns on or the servo power supply turns on again.

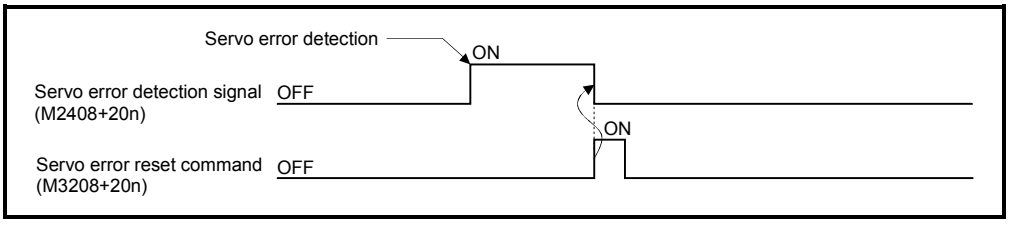

REMARK

(Note-1): Refer to APPENDIX 1.4 for the error codes on errors detected at the servo amplifier side.

(10) Home position return request signal (M2409+20n)

.....Status signal

This signal turns on when it is necessary to confirm the home position address.

(a) When not using an absolute position system

1) This signal turns on in the following cases:

- Motion CPU power supply on or reset
- Servo amplifier power supply on
- Home position return start
  (Unless a home position return is completed normally, the home position return request signal does not turn off.)

2) This signal turns off by the completion of home position return.

(b) When using an absolute position system

1) This signal turns on in the following cases:

- When not executing a home position return once after system start.
- Home position return start
  (Unless a home position return is completed normally, the home position return request signal does not turn off.)
- Erase of an absolute data in Motion CPU according to causes, such as battery error
- Servo error [2025] (absolute position erase) occurrence
- Servo error [2143] (absolute position counter warning) occurrence
- Major error [1203] or [1204] occurrence
- When the "rotation direction selection" of servo parameter is changed.

2) This signal turns off by the completion of the home position return.

⚠ CAUTION

● When using the absolute position system function, on starting up, and when the Motion controller or absolute value motor has been replaced, always perform a home position return. In the case of the absolute position system, use the PLC program to check the home position return request before performing the positioning operation.
Failure to observe this could lead to an accident such as a collision.

(11) Home position return complete signal (M2410+20n)

.....Status signal

(a) This signal turns on when the home position return operation using the servo program has been completed normally.

(b) This signal turns off at the positioning start, JOG operation start and manual pulse generator operation start.

(c) If the home position return of proximity dog, dog cradle or stopper type using the servo program is executed during this signal on, the "continuous home position return start error (minor error: 115)" occurs and it cannot be start the home position return.

(12) FLS signal (M2411+20n) (Note-1) .....Status signal

(a) This signal is controlled by the ON/OFF state for the upper stroke limit switch input (FLS) of the Q172LX/servo amplifier.
- Upper stroke limit switch input OFF ..... FLS signal: ON
- Upper stroke limit switch input ON ..... FLS signal: OFF

(b) The state for the upper stroke imit switch input (FLS) when the FLS signal is ON/OFF is shown below.
1) Q172LX use (Note-2)

2) Servo amplifier input use (Note-3)

(Note-1): Refer to the "Q173HCPU/Q172HCPU Motion controller Programming Manual (COMMON)" for an external signal.

(Note-2): Refer to the "Q173HCPU/Q172HCPU User's Manual" for a pin configuration.

(Note-3): Refer to the "MR-J3-□B Servo Amplifier Instruction Manual" for a pin configuration.

(13) RLS signal (M2412+20n) (Note-1) ..... Status signal

(a) This signal is controlled by the ON/OFF state for the lower stroke limit switch input (FLS) of the Q172LX/servo amplifier.
- Lower stroke limit switch input OFF ..... RLS signal: ON
- Lower stroke limit switch input ON ..... RLS signal: OFF

(b) The state of the lower stroke limit switch input (RLS) when the RLS signal is ON/OFF is shown below.
1) Q172LX use (Note-2)

2) Servo amplifier input use (Note-3)

(Note-1): Refer to the "Q173HCPU/Q172HCPU Motion controller Programming Manual (COMMON)" for an external signal.

(Note-2): Refer to the "Q173HCPU/Q172HCPU User's Manual" for a pin configuration.

(Note-3): Refer to the "MR-J3-□B Servo Amplifier Instruction Manual" for a pin configuration.

(14) STOP signal (M2413+20n) .....Status signal

(a) This signal is controlled by the ON/OFF state for the stop signal input (STOP) of the Q172LX.

- Stop signal input of the Q172LX OFF ..... STOP signal: OFF
- Stop signal input of the Q172LX ON ..... STOP signal: ON

(b) The state of the stop signal input (STOP) of the Q172LX when the STOP signal input is ON/OFF is shown below.

(15) DOG/CHANGE signal (M2414+20n) (Note-1) .....Status signal

(a) This signal turns on/off by the proximity dog input (DOG) of the Q172LX/servo amplifier at the home position return.
This signal turns on/off by the speed/position switching input (CHANGE) of the Q172LX at the speed/position switching control.
(There is no CHANGE signal in the servo amplifier.)

(b) When using the Q172LX, "Normally open contact input" and "Normally closed contact input" of the system setting can be selected.
The state of the speed/position switching input (CHANGE) when the CHANGE signal is ON/OFF is shown below.
1) Q172LX use (Note-2)

2) Servo amplifier input use (Note-3)

(Note-1): Refer to the "Q173HCPU/Q172HCPU Motion controller Programming Manual (COMMON)" for an external signal.

(Note-2): Refer to the "Q173HCPU/Q172HCPU User's Manual" for a pin configuration.

(Note-3): Refer to the "MR-J3-□B Servo Amplifier Instruction Manual" for a pin configuration.

(16) Servo ready signal (M2415+20n) .....Status signal

(a) This signal turns on when the servo amplifiers connected to each axis are in the READY state.

(b) This signal turns off in the following cases.
- M2042 is off
- Servo amplifier is not installed
- Servo parameter is not set
- It is received the forced stop input from an external source
- Servo OFF by the servo OFF command (M3215+20n) ON
- Servo error occurs

Refer to APPENDIX 1.4 "Servo errors" for details.

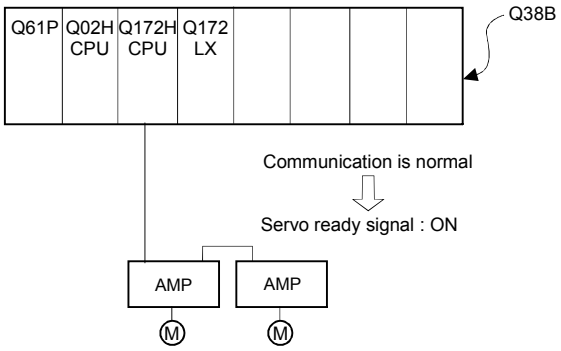

POINT
When the part of multiple servo amplifiers connected to the SSCNETⅢ becomes a servo error, only an applicable axis becomes the servo OFF state.

(17) Torque limiting signal (M2416+20n) .....Status signal

This signal turns on while torque limit is executed.
The signal toward the torque limiting axis turns on

(18) M-code outputting signal (M2419+20n) .....Status signal

(a) This signal turns during M-code is outputting.

(b) This signal turns off when the stop command, cancel signal, skip signal or FIN signal are inputted.

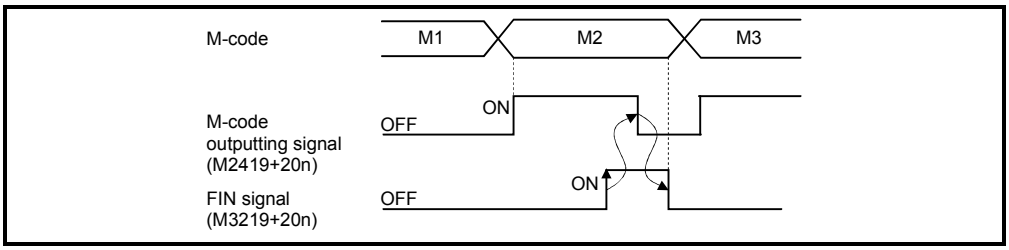

POINTS

(1) The FIN signal and M-code outputting signal are both for the FIN signal wait function.

(2) The FIN signal and M-code outputting signal are effective only when FIN acceleration/deceleration is designated in the servo program.
Otherwise, the FIN signal wait function is disabled, and the M-code outputting signal does not turn on.

3.1.2 Axis command signals

(1) Stop command (M3200+20n) ..... Command signal

(a) This command stops a starting axis from an external source and becomes effective at the turning signal off to on. (An axis for which the stop command is turning on cannot be started.)

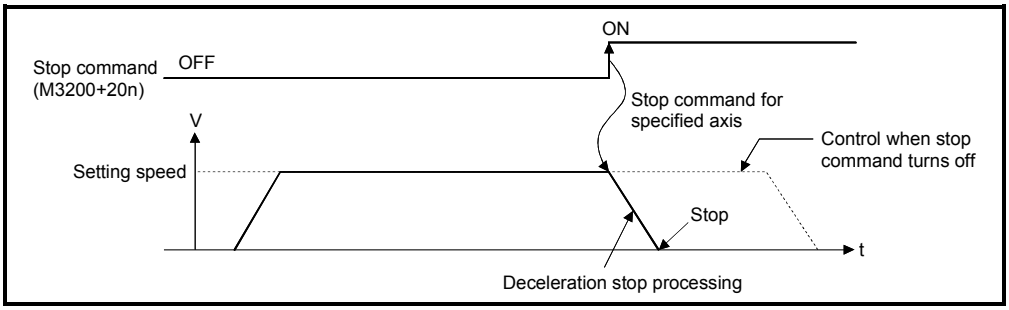

(b) The details of stop processing when the stop command turns on are shown below. (Refer to Section 6.13 or 6.14 for details of the speed control.)

Control details during execution	Processing at the turning stop command on	
	During control	During deceleration stop processing
Positioning control Speed control (I, II) JOG operation Speed control with fixed position stop	The axis decelerates to a stop in the deceleration time set in the parameter block or servo program.	The stop command is ignored and deceleration stop processing is continued.
Manual pulse generator operation	An immediate stop is executed without deceleration processing.	—
Home position return	(1) The axis decelerates to a stop in the deceleration time set in the parameter block. (2) A "stop error during home position return" occurs and the error code [202] is stored in the minor error storage register for each axis.	

(c) The stop command in a dwell time is invalid. (After a dwell time, the start accept flag (M2001+n) turns OFF, and the positioning complete signal (M2401+20n) turns ON.)

POINT

If it is made to stop by turning on the stop command (M3200+20n) during a home position return, execute the home position return again.
If the stop command is turned on after the proximity dog ON in the proximity dog type, execute the home position return after move to before the proximity dog ON by the JOG operation or positioning.

(2) Rapid stop command (M3201+20n) ..... Command signal

(a) This command is a signal which stop a starting axis rapidly from an external source and becomes effective when the signal turns off to on. (An axis for which the rapid stop command turns on cannot be started.)

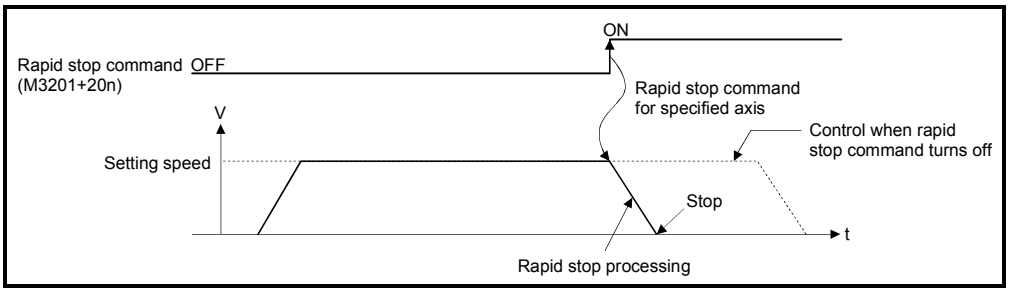

(b) The details of stop processing when the rapid stop command turns on are shown below.

Control details during execution	Processing at the turning rapid stop command on	
	During control	During deceleration stop processing
Position control	The axis decelerates to a rapid stop deceleration time set in the parameter block or servo program.	Deceleration processing is canceled and rapid stop processing executed instead.
Speed control (Ⅰ, Ⅱ)		
JOG operation		
Speed control with fixed position stop		
Manual pulse generator operation	An immediate stop is executed without deceleration processing.	—
Home position return	(1) The axis decelerates to a stop in the rapid stop deceleration time set in the parameter block. (2) A "stop error during home position return" error occurs and the error code [203] is stored in the minor error storage register for each axis.	

(c) The rapid stop command in a dwell time is invalid. (After a dwell time, the start accept flag (M2001+n) turns OFF, and the positioning complete signal (M2401+20n) turns ON.)

POINT

If it is made to stop rapidly by turning on the rapid stop command (M3201+20n) during a home position return, execute the home position return again.
If the rapid stop command turned on after the proximity dog ON in the proximity dog type, execute the home position return after move to before the proximity dog ON by the JOG operation or positioning.

(3) Forward rotation JOG start command (M3202+20n)/Reverse rotation JOG start command (M3203+20n) ..... Command signal

(a) JOG operation to the address increase direction is executed while forward rotation JOG start command (M3202+20n) is turning on.
When M3202+20n is turned off, a deceleration stop is executed in the deceleration time set in the parameter block.

(b) JOG operation to the address decrease direction is executed while reverse rotation JOG start command (M3203+20n) is turinig on.
When M3203+20n is turned off, a deceleration stop is executed in the deceleration time set in the parameter block.

POINT

Take an interlock so that the forward rotation JOG start command (M3202+20n) and reverse rotation JOG start command (M3203+20n) may not turn on simultaneously.

(4) Complete signal OFF command (M3204+20n)
..... Command signal

(a) This command is used to turn off the positioning start complete signal (M2400+20n) and positioning complete signal (M2401+20n).

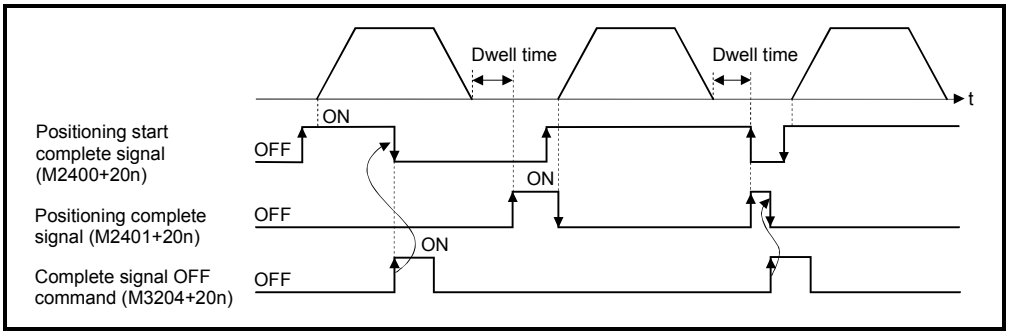

POINT

Do not turn the complete signal OFF command on with a PLS instruction.
If it is turned on with a PLS instruction, it cannot be turned off the positioning start complete signal (M2400+20n) and the positioning complete signal (M2401+20n).

(5) Speed/position switching enable command (M3205+20n)
..... Command signal

(a) This command is used to make the CHANGE signal (speed/position switching signal) effective from an external source.
- ON ..... Control switches from speed control to position control when the CHANGE signal turned on.
- OFF ..... Control does not switch from speed to position control even if the CHANGE signal turns on.

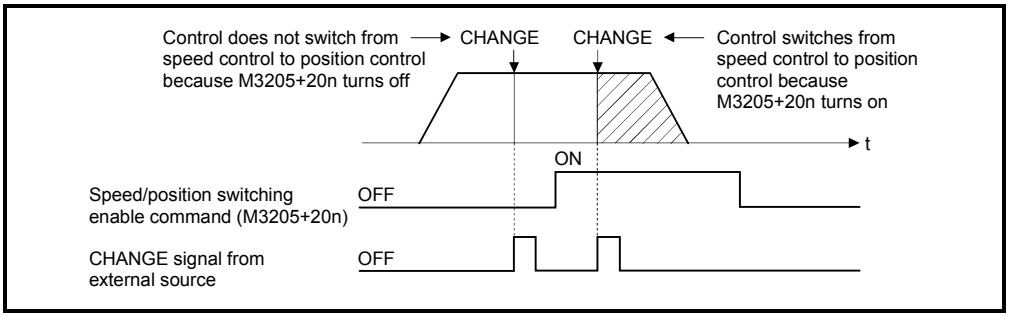

(6) Error reset command (M3207+20n) ..... Command signal

This command is used to clear the minor/major error code storage register of an axis for which the error detection signal has turn on (M2407+20n: ON), and reset the error detection signal (M2407+20n).

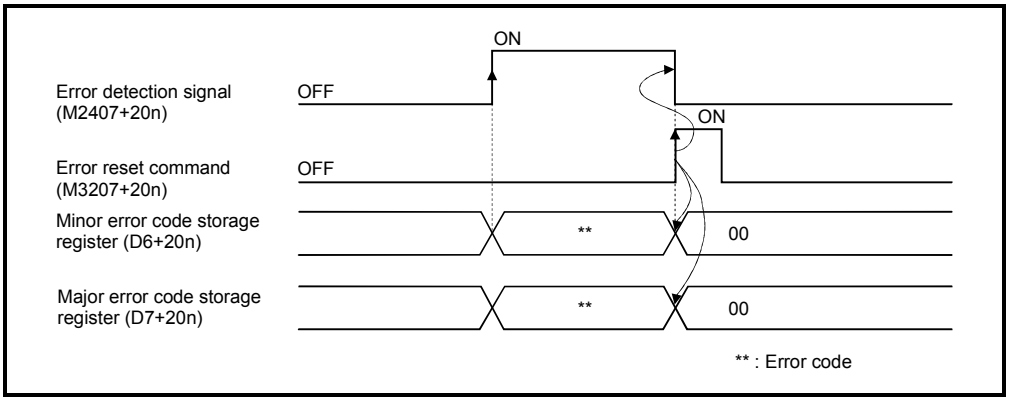

(7) Servo error reset command (M3208+20n) ..... Command signal

This command is used to clear the servo error code storage register of an axis for which the servo error detection signal has turn on (M2408+20n: ON), and reset the servo error detection signal (M2408+20n).

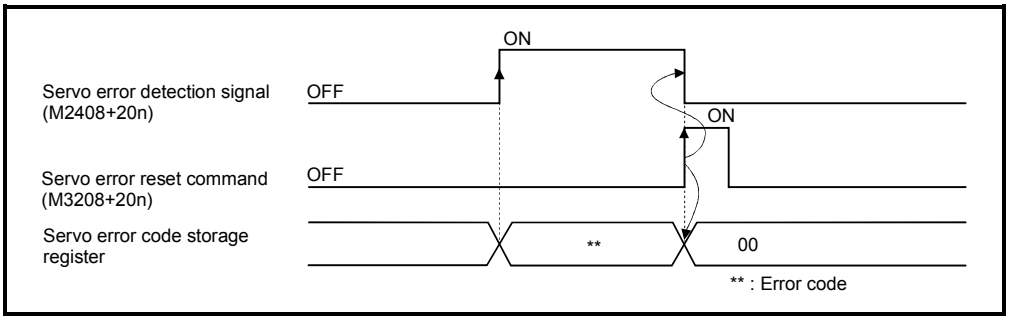

REMARK

Refer to APPENDIX 1 for details on the minor error code, major error code and servo error code storage registers.

(8) External stop input disable at start command (M3209+20n)
..... Command signal

This signal is used to set the external stop signal input valid or invalid.

- ON ..... External stop input is set as invalid, and even axes which stop input is turning on can be started.
- OFF ..... External stop input is set as valid, and axes which stop input is turning on cannot be started.

POINT

When it stops an axis with the external stop input after it starts by turning on the external stop input disable at start command (M3209+20n), switch the external stop input from OFF → ON (if the external stop input is turning on at the starting, switch it from ON → OFF → ON).

(9) Feed current value update request command (M3212+20n)
..... Command signal

This signal is used to set whether the feed current value will be cleared or not at the starting in speed/position switching control.

- ON ..... The feed current value is updated from the starting.
  The feed current value is not cleared at the starting.
- OFF ..... The feed current value is updated from the starting.
  The feed current value is cleared at the starting.

POINT

When it starts by turning on the feed current value update request command (M3212+20n), keep M3212+20n on until completion of the positioning control.
If M3212+20n is turned off on the way, the feed current value may not be reliable.

(10) Servo OFF command (M3215+20n) ..... Command signal

This command is used to execute the servo OFF state (free run state).

- M3215+20n: OFF ..... Servo ON
- M3215+20n: ON ..... Servo OFF (free run state)

This command becomes invalid during positioning, and should therefore be executed after completion of positioning.

⚠ CAUTION

● Turn the power supply of the servo amplifier side off before touching a servomotor, such as machine adjustment.

(11) Gain changing command (M3216+20n) ..... Command signal

This signal is used to change the gain of servo amplifier in the Motion controller by the gain changing command ON/OFF.

• ON ..... Gain changing command ON
• OFF ..... Gain changing command OFF

Refer to the "MR-J3-□B Servo Amplifier Instruction Manual" for details of gain changing function.
Instruction Manual list is shown below.

Servo amplifier type	Instruction manual name
MR-J3-□B	MR-J3-□B Servo Amplifier Instruction Manual (SH-030051)

(12) Control loop changing command (M3216+20n)
..... Command signal

When using the fully closed loop control servo amplifier, this signal is used to change the fully closed loop control/semi closed loop control of servo amplifier in the Motion controller by the control loop changing command ON/OFF.

• ON ..... During fully closed loop control
• OFF ..... During semi closed loop control

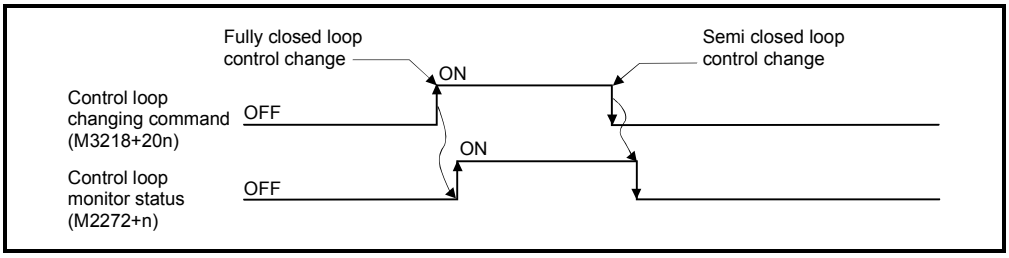

Refer to the "Fully closed loop control MR-J3-□B-RJ006 Servo Amplifier Instruction Manual" for details of control loop changing.
Instruction Manual list is shown below.

Servo amplifier type	Instruction manual name
MR-J3-□B-RJ006	Fully closed loop control MR-J3-□B-RJ006 Servo Amplifier Instruction Manual (SH-030056)

POINTS

(1) When the servo amplifier is not started (LED: "AA", "Ab", "AC", "Ad" or "AE"), if the control loop changing command is turned ON/OFF, the command becomes invalid.
(2) When the followings are operated during the fully closed loop, it returns to the semi closed loop control.
  (a) Power supply ON or reset of the Motion CPU
  (b) Wire breakage of the SSCNETⅢ cable between the servo amplifier and Motion controller
  (c) Control circuit power supply OFF of the servo amplifier

REMARK

It can be use in the SW6RN-SV13Q□/SV22Q□ (Ver.00D or later).

(13) FIN signal (M3219+20n) ..... Command signal

When a M-code is set in a servo program, transit to the next block does not execute until the FIN signal changes as follows: OFF → ON → OFF.
Positioning to the next block begins after the FIN signal changes as above.
It is valid, only when the FIN accelaration/deceleration is set and FIN signal wait function is selected.

```
<K 0>

        CPSTART2
         Axis          1
Point    Axis          2
         Speed                  10000
         FIN acceleration/        100
          deceleration
1       ABS-2
         Axis          1,       200000
         Axis          2,       200000
         M-code                     10
2       ABS-2
         Axis          1,       300000
         Axis          2,       250000
         M-code                     11
3       ABS-2
         Axis          1,       350000
         Axis          2,       300000
         M-code                     12
4       ABS-2
         Axis          1,       400000
         Axis          2,       400000
        CPEND
```

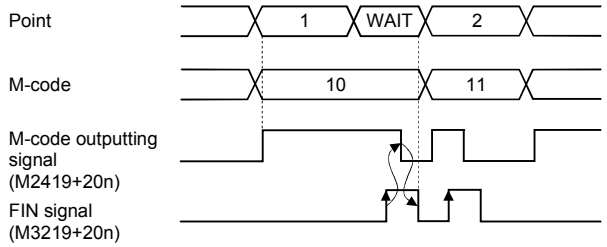

Timing Chart for Operation Description

1. When the positioning of point 1 starts, M-code 10 is output and the M-code outputting signal turns on.
2. FIN signal turns on after performing required processing in the Motion SFC program. Transition to the next point does not execute until the FIN signal turns on.
3. When the FIN signal turns on, the M-code outputting signal turns off.
4. When the FIN signal turns off after the M-code outputting signal turns off, the positioning to the next point 2 starts.

POINTS

(1) The FIN signal and M-code outputting signal are both signal for the FIN signal wait function.

(2) The FIN signal and M-code outputting signal are valid only when FIN acceleration/deceleration is designated in the servo program.
Otherwise, the FIN signal wait function is disabled, and the M-code outputting signal does not turn on.

3.1.3 Common devices

POINTS

(1) Internal relays for positioning control are not latched even within the latch range. In this manual, in order to indicate that internal relays for positioning control are not latched, the expression used in this text is "M2000 to M2319".

(2) The range devices allocated as internal relays for positioning control cannot be used by the user even if their applications have not been set.

(1) PLC ready flag (M2000) ..... Command signal

(a) This signal informs the Motion CPU that the PLC CPU is normal.
1) The positioning control, home position return, JOG operation or manual pulse generator operation using the servo program which performs the Motion SFC program when the M2000 is ON.
2) The above 1) control is not performed even if the M2000 is turned on during the test mode [TEST mode ON flag (M9075): ON] using a peripheral device.

(b) The setting data such as the fixed parameters, servo parameters and limit switch output data can be changed using a peripheral device when the M2000 is OFF only.
The above data using a peripheral device cannot be written when the M2000 is ON.

(c) The following processings are performed when the M2000 turns OFF to ON.
1) Processing details
• Clear the M-code storage area of all axes.
• Turn the PCPU READY complete flag (M9074) on. (Motion SFC program can be executed.)
• Start to execute the Motion SFC program of the automatic starting from the first.
2) If there is a starting axis, an error occurs, and the processing in above (c) 1) is not executed.

3) The processing in above (c) 1) is not executed during the test mode.
It is executed when the test mode is cancelled and M2000 is ON.

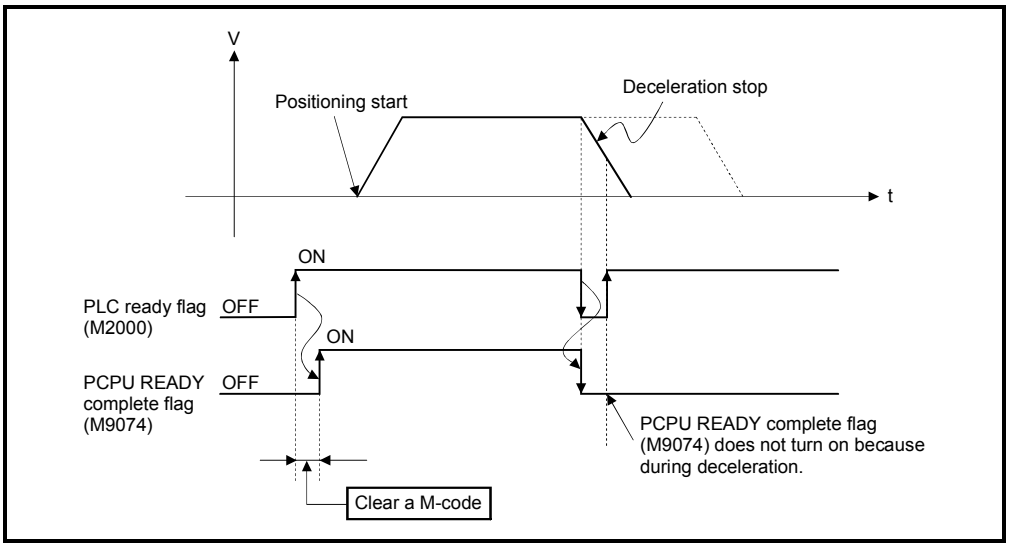

(d) The following processings are performed when the M2000 turns ON to OFF.

1) Processing details

- Turn the PCPU READY complete flag (M9074) off.
- Deceleration stop of the starting axis.
- Stop to execute the Motion SFC program.
- Turn all points of the real output PY off.

(e) Operation setting at STOP → RUN

The condition which the PLC ready flag (M2000) turns on is set in the sysytem setting. Select the following either.

1) M2000 turns on by the switch (STOP → RUN). (Default)

The condition which M2000 turns OFF to ON.

- Move the RUN/STOP switch from STOP to RUN.
- Turn the power supply on or release to reset where the RUN/STOP switch is moved to RUN.

The condition which M2000 turns ON to OFF.

- Move the RUN/STOP switch from RUN to STOP.

2) M2000 turns on by set "1" to the switch (STOP → RUN) + setting register.

(M2000 is turned on by set "1" to the switch RUN ∧ setting register.)

The condition which M2000 is turned ON to OFF.

- Set "1" to the setting register D704 of the PLC ready flag where the RUN/STOP switch is moved to RUN. (The Motion CPU detects the change of the lowest rank bit 0 → 1 in D704.)

The condition which M2000 is turned ON to OFF.

- Set "0" to the setting register D704 of the PLC ready flag where the RUN/STOP switch is moved to RUN. (The Motion CPU detects the change of the lowest rank bit 1 → 0 in D704.)
- Move the RUN/STOP switch from RUN to STOP.

(2) Start accept flag (M2001 to M2032) ..... Status signal

(a) This flag turns on when the servo program is started. The start accept flag corresponding to an axis specified with the servo program turns on.

(b) The ON/OFF processing of the start accept flag is shown below.

1) When the servo program is started using the Motion SFC program or Motion dedicated PLC instruction (S(P).SVST), the start accept flag corresponding to an axis specified with the servo program turns on and it turns off at the positioning completion. This flag also turns off when it is made to stopping on the way.
(When it is made to stop on the way by the speed change to speed "0", this flag remains on.)

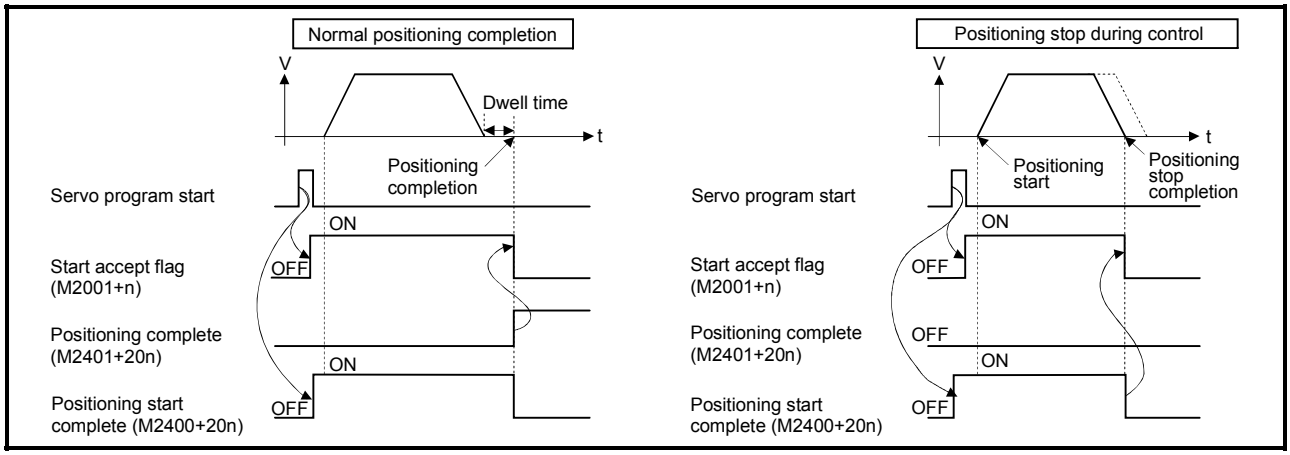

2) This flag turns on at the positioning control by turning on the JOG start command (M3202+20n or M3203+20n), and turns off at the positioning stop by turning off the JOG start command.

3) This flag turns on during the manual pulse generator enable (M2051 to M2053: ON), and turns off at the manual pulse generator disable (M2051 to M2053: OFF).

4) This flag turns on during a current value change by the CHGA instruction of servo program or Motion dedicated PLC instruction (S(P).CHGA), and turns off at the completion of the current value change.

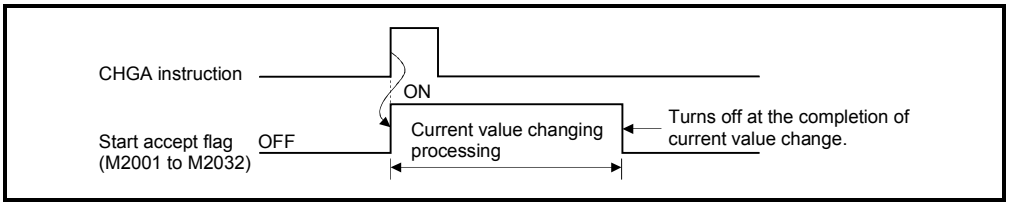

The start accept flag list is shown below.

Axis No.	Device No.	Axis No.	Device No.	Axis No.	Device No.	Axis No.	Device No.
1	M2001	9	M2009	17	M2017	25	M2025
2	M2002	10	M2010	18	M2018	26	M2026
3	M2003	11	M2011	19	M2019	27	M2027
4	M2004	12	M2012	20	M2020	28	M2028
5	M2005	13	M2013	21	M2021	29	M2029
6	M2006	14	M2014	22	M2022	30	M2030
7	M2007	15	M2015	23	M2023	31	M2031
8	M2008	16	M2016	24	M2024	32	M2032

(Note): The range of axis No.1 to 8 is valid in the Q172HCPU.

⚠ CAUTION

● Do not turn the start accept flags ON/OFF in the user side.

- If the start accept flag is turned off using the Motion SFC program or peripheral devices while this flag is on, no error will occur but the positioning operation will not be reliable. Depending on the type of machine, it might operate in an unanticipated operation.
- If the start accept flag is turned on using the Motion SFC program or peripheral devices while this flag is off, no error will occur but the "start accept on error" will occur at the next starting and cannot be started.

(3) Personal computer link communication error flag (M2034)

..... Status signal

This flag turns on when the communication error occurs in the personal computer link communication.

- ON : Personal computer link communication error occurs
- OFF: No personal computer link communication error
  (It turns off if normal communication is resumed.)

Refer to APPENDIX 1.5 for details on the PC link communication errors.

(4) Motion SFC error history clear request flag (M2035)

…… Command signal

This flag is used to clear the backed-up Motion SFC error history (#8000 to #8063).

The Motion SFC error history is cleared at the turning M2035 OFF to ON.

After detection of the turning M2035 OFF to ON, the Motion SFC error history is cleared, and then the M2035 is automatically turned OFF.

(5) Motion SFC error detection flag (M2039) ..... Status signal

This flag turns on with error occurrence at the execution of the Motion SFC program.

When turned off this flag, execute it by the user side after checking the error contents.

(6) Speed switching point specified flag (M2040) ..... Command signal

This flag is used when the speed change is specified at the pass point of the constant speed control.

(a) By turning M2040 on before the starting of the constant speed control (before the servo program is started), control with the change speed can be executed from the first of pass point.

- OFF ..... Speed is changed to the specified speed from the pass point of the constant speed control.
- ON ..... Speed has been changed to the specified speed at the pass point of the constant speed control.

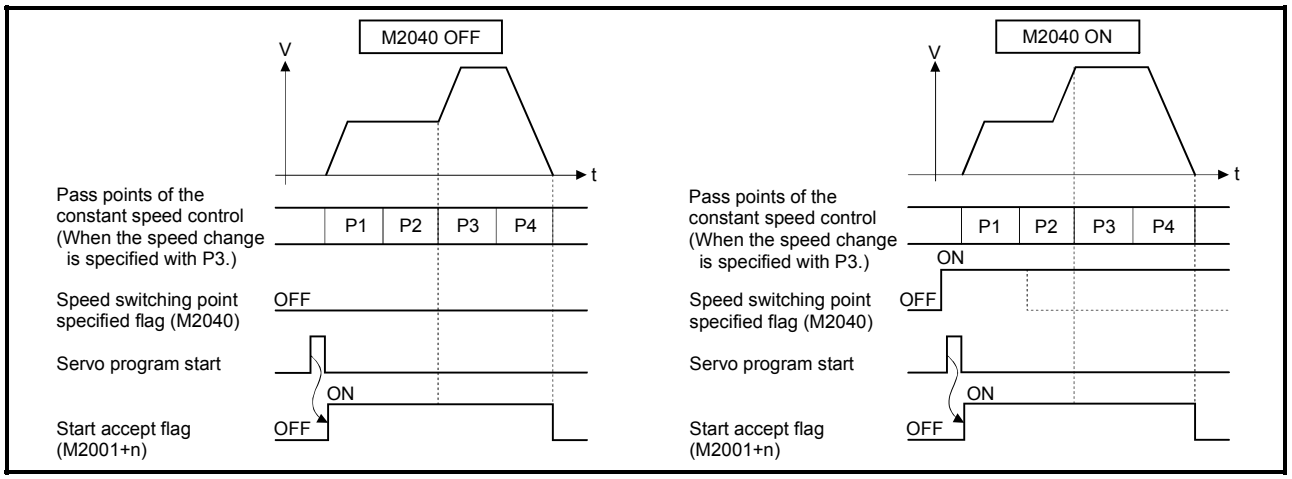

(7) System setting error flag (M2041)..... Status signal

This flag set the "system setting data" and performs an adjustment check with a real installation state (CPU base unit/extension base units) at the power supply on or resetting of the Motion CPU.

- ON ..... Error
- OFF ..... Normal

(a) When an error occurs, the ERR. LED at the front of the CPU turns on. The error contents can be confirmed using the error list monitor of a peripheral device started by SW6RN-GSV□P.

(b) When M2041 is on, positioning cannot be started. Remove an error factor, and turn the power supply on again or reset the Multiple CPU system.

REMARK

Even if the module which is not set as the system setting with the peripheral device is installed in the slot, it is not set as the object of an adjustment check. And, the module which is not set as the system setting cannot be used in the Motion CPU.

(8) All axes servo ON command (M2042) ..... Command signal

This command is used to enable servo operation.

(a) Servo operation enabled … M2042 turns on while the servo OFF command (M3215+20n) is off and there is no servo error.

(b) Servo operation disable ..... • M2042 is off
• The servo OFF command (M3215+20n) is on
• Servo error state

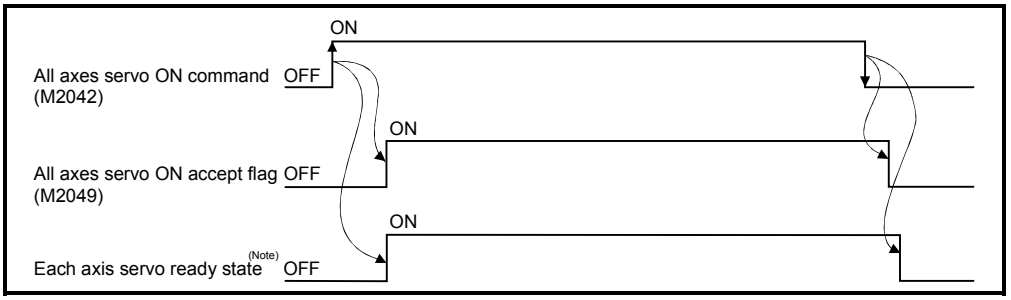

(Note): Refer to "3.1.1 Axis statuses "Servo ready signal"" for details.

POINT
When M2042 turns on, it is not turned off even if the CPU is set in the STOP state.

(9) Motion slot fault detection flag (M2047) ..... Status signal

This flag is used as judgement which modules installed in the motion slot of the CPU base unit is "normal" or "abnormal".

• ON ..... Installing module is abnormal
• OFF ..... Installing module is normal

The module information at the power supply on and after the power supply injection are always checked, and errors are detected.

(a) Perform the disposal (stop the starting axis, servo OFF, etc.) of error detection using the Motion SFC program.

(10) JOG operation simultaneous start command (M2048)
……. Command signal

(a) When M2048 turns on, JOG operation simultaneous start based on the JOG operation execution axis set in the JOG operation simultaneous start axis setting register (D710 to D713).

(b) When M2048 turns off, the axis during operation decelerates to a stop.

(11) All axes servo ON accept flag (M2049) ..... Status signal

This flag turns on when the Motion CPU accepts the all axes servo ON command (M2042).

Since the servo ready state of each axis is not checked, confirm it in the servo ready signal (M2415+20n).

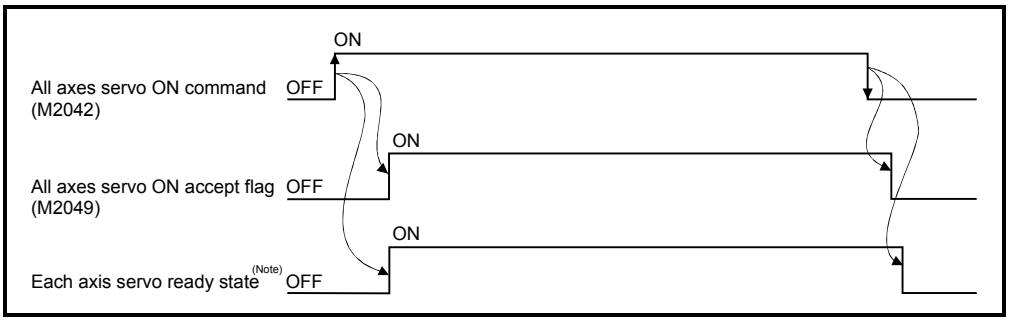

(Note): Refer to "3.1.1 Axis statuses "Servo ready signal"" for details.

(12) Manual pulse generator enable flag (M2051 to M2053)

..... Command signal

This flag set the enabled or disabled state for positioning with the pulse input from the manual pulse generators connected to P1 to P3 (Note) of the Q173PX.

- ON ..... Positioning control is executed by the input from the manual pulse generators.
- OFF ..... Positioning control cannot be executed by the manual pulse generators because of the input from the manual pulse generators is ignored.

Default value is invalid (OFF).

REMARK

(Note): Refer to the "Q173HCPU/Q172HCPU User's Manual" for P1 to P3 connector of the Q173PX.

(13) Operation cycle over flag (M2054) ..... Status signal

This flag turns on when the time concerning motion operation exceeds the operation cycle of the Motion CPU setting. Perform the following operation, in making it turn off.

- Turn the power supply of the Multiple CPU system on to off
- Reset the Multiple CPU system
- Reset using the user program

[Error measures]

1) Change the operation cycle into a large value in the system setting.
2) The number of instruction completions of an event task or NMI task in the Motion SFC program.

(14) Speed changing flag (M2061 to M2092) ..... Status signal

This flag turns on during speed change by the control change (CHGV) instruction (or Motion dedicated PLC instruction (S(P).CHGV)) of the Motion SFC program.

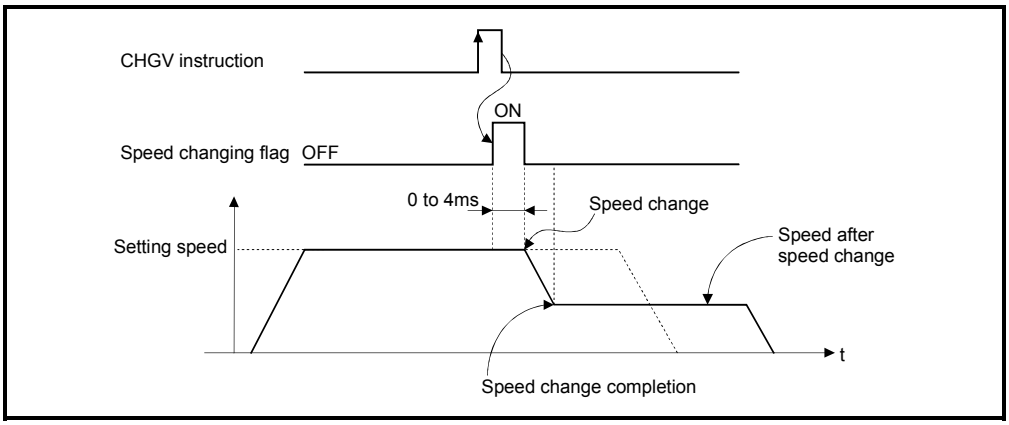

The speed changing flag list is shown below.

Axis No.	Device No.	Axis No.	Device No.	Axis No.	Device No.	Axis No.	Device No.
1	M2061	9	M2069	17	M2077	25	M2085
2	M2062	10	M2070	18	M2078	26	M2086
3	M2063	11	M2071	19	M2079	27	M2087
4	M2064	12	M2072	20	M2080	28	M2088
5	M2065	13	M2073	21	M2081	29	M2089
6	M2066	14	M2074	22	M2082	30	M2090
7	M2067	15	M2075	23	M2083	31	M2091
8	M2068	16	M2076	24	M2084	32	M2092

(Note): The range of axis No.1 to 8 is valid in the Q172HCPU.

REMARK

In the SV22 virtual mode, the flag is that of the virtual servomotor axis.

(15) Automatic decelerating flag (M2128 to M2159) ..... Status signal

This signal turns on while automatic deceleration processing is performed at the positioning control or position follow-up control.

(a) This flag turns on during automatic deceleration processing to the command address at the position follow-up control, but it turns off if the command address is changed.

(b) When the normal start is completed at the control in all control system, it turns off.

(c) In any of the following cases, this flag does not turn off.

- During deceleration by the JOG signal off
- During manual pulse generator operation
- At deceleration on the way due to stop command or stop cause occurrence
- When travel value is 0

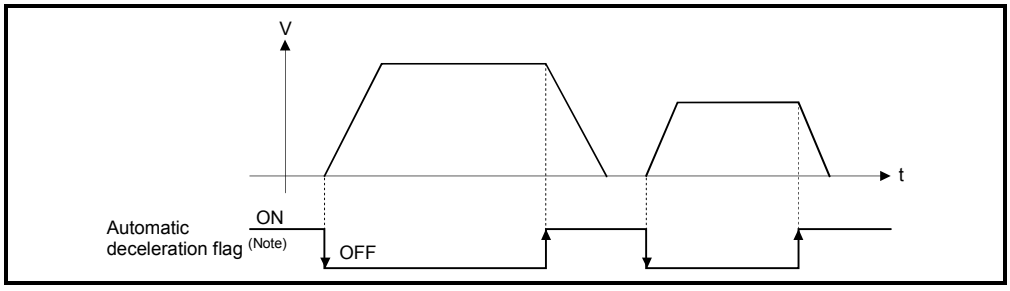

The automatic deceleration flag list is shown below.

Axis No.	Device No.	Axis No.	Device No.	Axis No.	Device No.	Axis No.	Device No.
1	M2128	9	M2136	17	M2144	25	M2152
2	M2129	10	M2137	18	M2145	26	M2153
3	M2130	11	M2138	19	M2146	27	M2154
4	M2131	12	M2139	20	M2147	28	M2155
5	M2132	13	M2140	21	M2148	29	M2156
6	M2133	14	M2141	22	M2149	30	M2157
7	M2134	15	M2142	23	M2150	31	M2158
8	M2135	16	M2143	24	M2151	32	M2159

(Note): The range of axis No.1 to 8 is valid in the Q172HCPU.

REMARK

In the SV22 virtual mode, the flag is that of the virtual servomotor axis.

(16) Speed change "0" accepting flag (M2240 to M2271)

..... Status signal

This flag turns on while a speed change request to speed "0" or negative speed change is being accepted.

It turns on when the speed change request to speed "0" or negative speed change is accepted during a start. After that, this signal turns off when a speed change is accepted or on completion of a stop due to a stop cause.

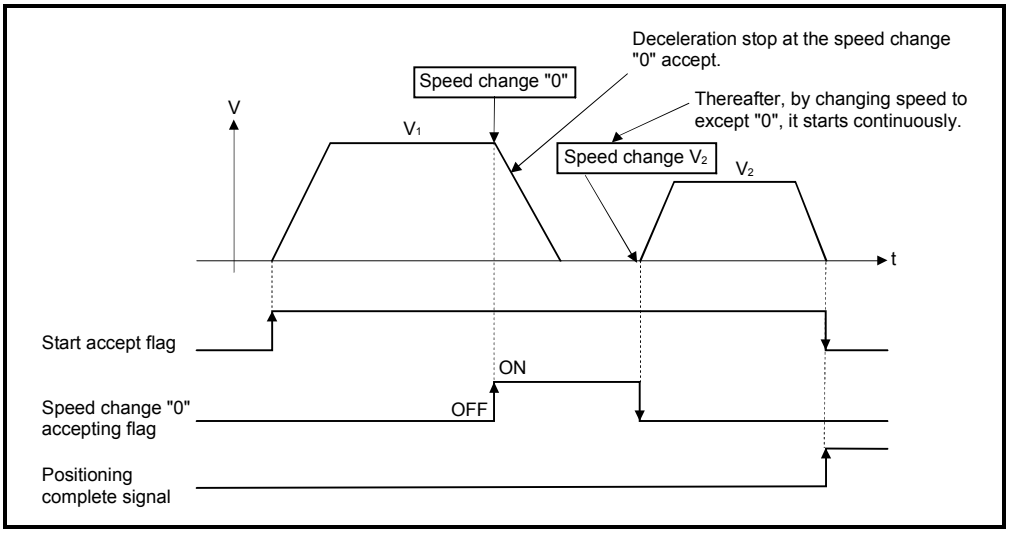

The speed change "0" accepting flag list is shown below.

Axis No.	Device No.	Axis No.	Device No.	Axis No.	Device No.	Axis No.	Device No.
1	M2240	9	M2248	17	M2256	25	M2264
2	M2241	10	M2249	18	M2257	26	M2265
3	M2242	11	M2250	19	M2258	27	M2266
4	M2243	12	M2251	20	M2259	28	M2267
5	M2244	13	M2252	21	M2260	29	M2268
6	M2245	14	M2253	22	M2261	30	M2269
7	M2246	15	M2254	23	M2262	31	M2270
8	M2247	16	M2255	24	M2263	32	M2271

(Note): The range of axis No.1 to 8 is valid in the Q172HCPU.

REMARK

(1) Even if it has stopped, when the start accept flag (M2001 to M2032) is ON state, the state where the request of speed change "0" is accepted is indicated. Confirm by this speed change "0" accepting flag.

(2) During interpolation, the flags corresponding to the interpolation axes are set.

(3) In any of the following cases, the speed change "0" request is invalid.
- After deceleration by the JOG signal off
- During manual pulse generator operation
- After positioning automatic deceleration start
- After deceleration due to stop cause

(4) During the SV22 virtual mode, the flag is that of the virtual servomotor axis.

(a) The flag turns off if a speed change request occurs during deceleration to a stop due to speed change "0".

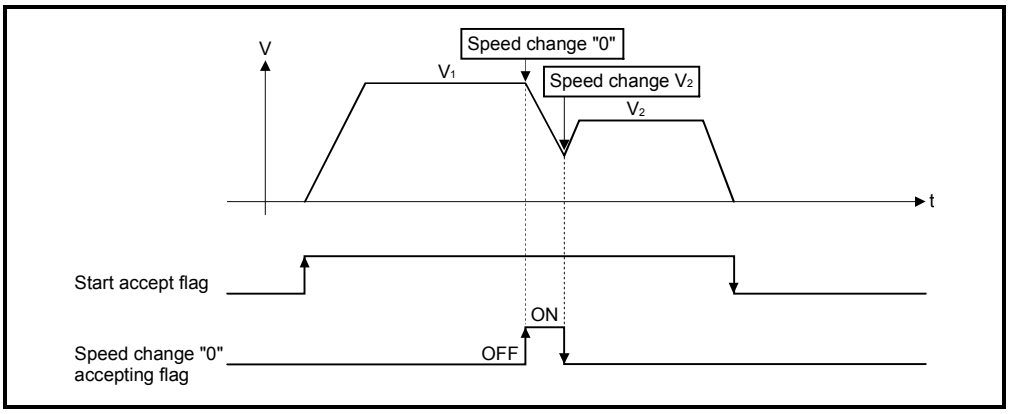

(b) The flag turns off if a stop cause occurs after speed change "0" accept.

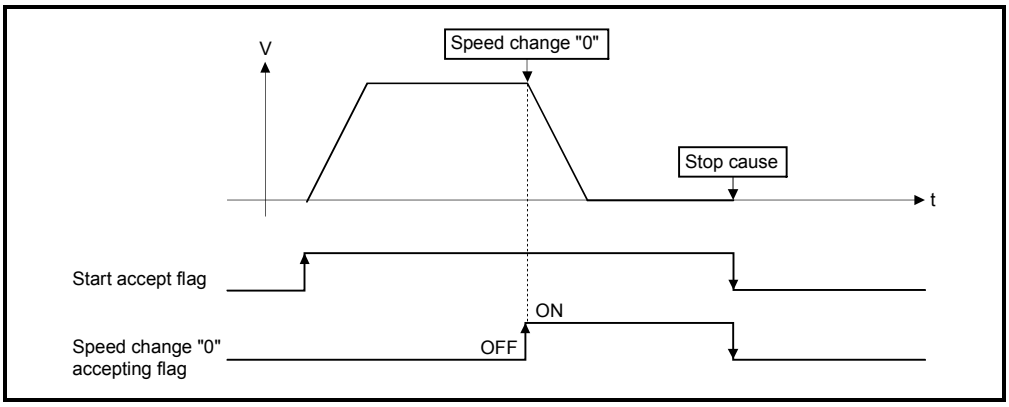

(c) The speed change "0" accepting flag does not turn on if a speed change "0" occurs after an automatic deceleration start.

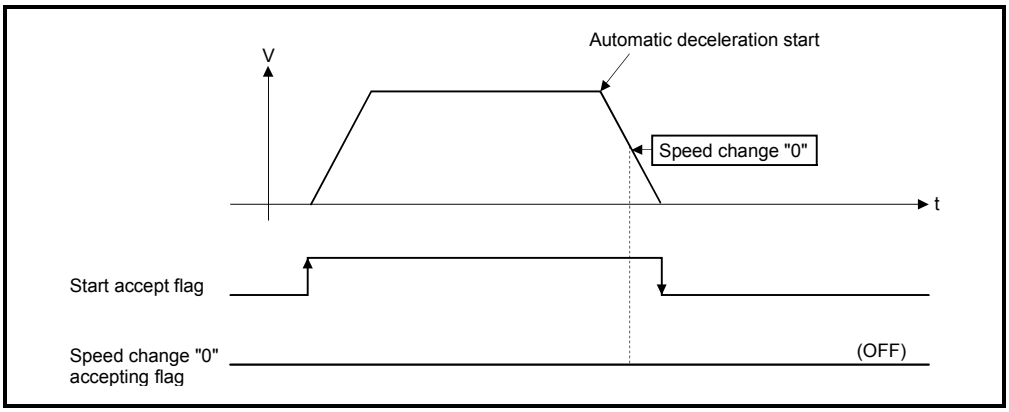

(d) Even if it is speed change "0" after the automatic deceleration start to the "command address", speed change "0" accepting flag turns on.

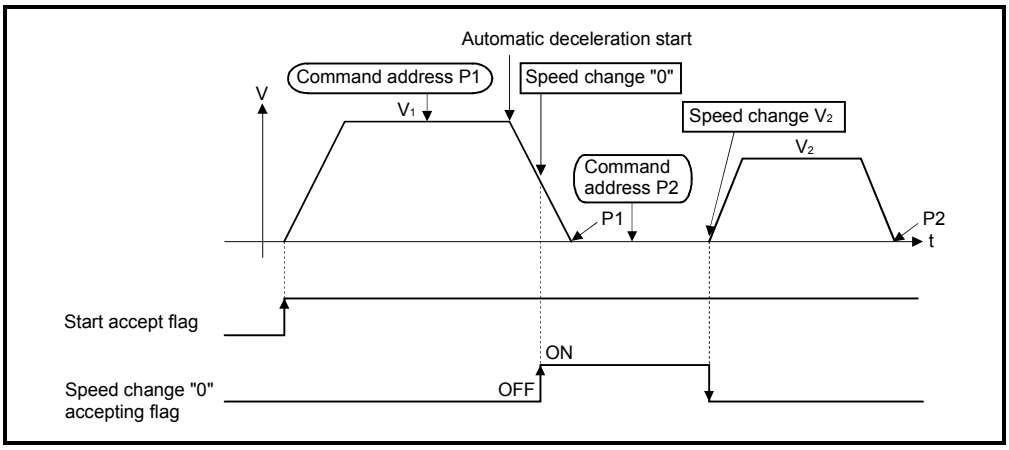

REMARK

It does not start, even if the "command address" is changed during speed change "0" accepting.

(17) Control loop monitor status (M2272 to M2303)

..... Command signal

When using the fully closed loop control servo amplifier, this signal is used to check the fully closed loop control/semi closed loop control of servo amplifier.

• ON ..... During fully closed loop control

• OFF ..... During semi closed loop control

It can be changed the fully closed loop control/semi closed loop control of servo amplifier in the Motion controller by the control loop changing command ON/OFF.

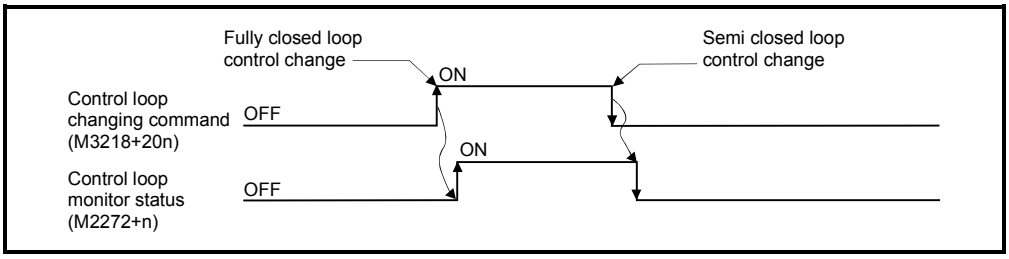

The Control loop monitor status list is shown below.

Axis No.	Device No.	Axis No.	Device No.	Axis No.	Device No.	Axis No.	Device No.
1	M2272	9	M2280	17	M2288	25	M2296
2	M2273	10	M2281	18	M2289	26	M2297
3	M2274	11	M2282	19	M2290	27	M2298
4	M2275	12	M2283	20	M2291	28	M2299
5	M2276	13	M2284	21	M2292	29	M2300
6	M2277	14	M2285	22	M2293	30	M2301
7	M2278	15	M2286	23	M2294	31	M2302
8	M2279	16	M2287	24	M2295	32	M2303

(Note): The range of axis No.1 to 8 is valid in the Q172HCPU.

REMARK

It can be use in the SW6RN-SV13Q□/SV22Q□ (Ver.00D or later).

3.2 Data Registers

(1) Data register list

SV13		SV22	
Device No.	Application	Device No.	Application
D0 to	Axis monitor device (20 points × 32 axes)	D0 to	Axis monitor device (20 points × 32 axes) Real mode……each axis Virtual mode….output module
D640 to	Control change register (2 points × 32 axes)	D640 to	Control change register (2 points × 32 axes)
D704 to	Common device (Command signal) (54 points)	D704 to	Common device (Command signal) (54 points)
D758 to	Common device (Monitor) (42 points)	D758 to	Common device (Monitor) (42 points)
D800		D800 to	Virtual servomotor axis monitor device (Note) (10 points × 32 axes) (Mechanical system setting axis only)
		D1120 to	Syncronous encoder axis monitor device (Note) (10 points × 12 axes)
		D1240 to	CAM axis monitor device (Note) (10 points × 32 axes)
to	User device (7392 points)	D1560 to	User device (6632 points)
D8191		D8191	

Usable in the user device.

(Note): When it is used in the SV22 real mode only, it can be used as an user device.

POINT

• Total number of user device points

7392 points (SV13) / 6632 points (SV22 real mode only)

(2) Axis monitor device list

Axis No.	Device No.	Signal name
1	D0 to D19	
2	D20 to D39	
3	D40 to D59	
4	D60 to D79	
5	D80 to D99	
6	D100 to D119	
7	D120 to D139	
8	D140 to D159	
9	D160 to D179	
10	D180 to D199	
11	D200 to D219	
12	D220 to D239	
13	D240 to D259	
14	D260 to D279	
15	D280 to D299	
16	D300 to D319	
17	D320 to D339	
18	D340 to D359	
19	D360 to D379	
20	D380 to D399	
21	D400 to D419	
22	D420 to D439	
23	D440 to D459	
24	D460 to D479	
25	D480 to D499	
26	D500 to D519	
27	D520 to D539	
28	D540 to D559	
29	D560 to D579	
30	D580 to D599	
31	D600 to D619	
32	D620 to D639	

	Signal name	Refresh cycle	Fetch cycle	Unit	Signal direction
0	Feed current value	Operation cycle		Command unit	Monitor device
1					
2	Real current value				
3					
4	Deviation counter value			PLS	
5					
6	Minor error code	Immediate		—	
7	Major error code				
8	Servo error code	Main cycle			
9	Home position return re-travel value	Operation cycle		PLS	
10	Travel value after proximity dog ON			Command unit	
11					
12	Execute program No.	At start		—	
13	M-code	Operation cycle			
14	Torque limit value			%	
15	Data set pointer for constant-speed control	At start/during start		—	
16	Travel value change register		Operation cycle	Command unit	Command device
17					
18	Real current value at stop input	Operation cycle			Monitor device
19					

(Note-1): The range of axis No.1 to 8 is valid in the Q172HCPU.

(Note-2): Device area of 9 axes or more is unusable in the Q172HCPU.

(3) Control change register list

Axis No.	Device No.	Signal name
1	D640, D641	
2	D642, D643	
3	D644, D645	
4	D646, D647	
5	D648, D649	
6	D650, D651	
7	D652, D653	
8	D654, D655	
9	D656, D657	
10	D658, D659	
11	D660, D661	
12	D662, D663	
13	D664, D665	
14	D666, D667	
15	D668, D669	
16	D670, D671	
17	D672, D673	
18	D674, D675	
19	D676, D677	
20	D678, D679	
21	D680, D681	
22	D682, D683	
23	D684, D685	
24	D686, D687	
25	D688, D689	
26	D690, D691	
27	D692, D693	
28	D694, D695	
29	D696, D697	
30	D698, D699	
31	D700, D701	
32	D702, D703	

	Signal name	Refresh cycle	Fetch cycle	Unit	Signal direction
0 1	JOG speed setting		At start	Command unit	Command device

(Note-1): The range of axis No.1 to 8 is valid in the Q172HCPU.

(Note-2): Device area of 9 axes or more is unusable in the Q172HCPU.

(4) Common device list

Device No.	Signal name		Refresh cycle	Fetch cycle	Signal direction
D704	PLC ready flag request			Main cycle	Command device
D705	Speed switching point specified flag request				
D706	All axes servo ON command request				
D707	Real/virtual mode switching request (SV22)				
D708	JOG operation simultaneous start command request				
D709	Unusable		—	—	—
D710	JOG operation simultaneous start axis setting register			At start	Command device
D711					
D712					
D713					
D714	Manual pulse generator axis 1 No. setting register			At the manual pulse generator enable flag	
D715					
D716	Manual pulse generator axis 2 No. setting register				
D717					
D718	Manual pulse generator axis 3 No. setting register				
D719					
D720	Axis 1	Manual pulse generators 1 pulse input magnification setting register (Note-2), (Note-3)			
D721	Axis 2				
D722	Axis 3				
D723	Axis 4				
D724	Axis 5				
D725	Axis 6				
D726	Axis 7				
D727	Axis 8				
D728	Axis 9				
D729	Axis 10				
D730	Axis 11				
D731	Axis 12				
D732	Axis 13				
D733	Axis 14				
D734	Axis 15				
D735	Axis 16				
D736	Axis 17				
D737	Axis 18				
D738	Axis 19				
D739	Axis 20				
D740	Axis 21				
D741	Axis 22				
D742	Axis 23				
D743	Axis 24				
D744	Axis 25				
D745	Axis 26				
D746	Axis 27				
D747	Axis 28				
D748	Axis 29				
D749	Axis 30				
D750	Axis 31				
D751	Axis 32				

Device No.	Signal name	Refresh cycle	Fetch cycle	Signal direction
D752	Manual pulse generator 1 smoothing magnification setting register		At the manual pulse generator enable flag	Command device
D753	Manual pulse generator 2 smoothing magnification setting register			
D754	Manual pulse generator 3 smoothing magnification setting register			
D755	Manual pulse generator 1 enable flag request		Main cycle	
D756	Manual pulse generator 2 enable flag request			
D757	Manual pulse generator 3 enable flag request			
D758	Unusable	—	—	—
D759	PCPU ready complete flag status	Main cycle		Monitor device
D760	Unusable (30 points)	—	—	—
D761				
D762				
D763				
D764				
D765				
D766				
D767				
D768				
D769				
D770				
D771				
D772				
D773				
D774				
D775				
D776				
D777				
D778				
D779				
D780				
D781				
D782				
D783				
D784				
D785				
D786				
D787				
D788				
D789				
D790	Real mode axis information register (SV22) (Note-1)	Main cycle		Monitor device
D791				
D792	Unusable (8 points)	—	—	—
D793				
D794				
D795				
D796				
D797				
D798				
D799				

(Note-1): This signal is unusable in the SV13/SV22 real mode.
(Note-2): The range of axis No.1 to 8 is valid in the Q172HCPU.
(Note-3): Device area of 9 axes or more is unusable in the Q172HCPU.

3.2.1 Axis monitor devices

The monitoring data area is used by the Motion CPU to store data such as the feed current value during positioning control, the real current value and the number of droop pulses in the deviation counter.
It can be used to check the positioning control state using the Motion SFC program.
The user cannot write data to the monitoring data area (except the travel value change register).
Refer to APPENDIX 5 "Processing Time of the Motion CPU" for the delay time between a positioning device (input, internal relay and special relay) turning on/off and storage of data in the monitor data area.

(1) Feed current value storage register (D0+20n, D1+20n)
..... Monitor device

(a) This register stores the target address output to the servo amplifier on the basis of the positioning address/travel value specified with the servo program.
1) A part for the amount of the travel value from "0" after starting is stored in the fixed-pitch feed control.
2) The current value from address at the time of starting is stored in the speed/position switching control.
However, the address at the time of starting varies depending on the ON/OFF state of the feed current value update command (M3212+20n) at the start.
• M3212+20n: OFF ..... Resets the feed current value to "0" at the start.
• M3212+20n: ON ..... Not reset the feed current value at the start.
3) "0" is stored during speed control.

(b) The stroke range check is performed on this feed current value data.

(2) Real current value storage register (D2+20n, D3+20n)
..... Monitor device

(a) This register stores the real current value which took the droop pulses of the servo amplifier into consideration to the feed current value.

(b) The "feed current value" is equal to the "real current value" in the stopped state.

(3) Deviation counter value storage register (D4+20n, D5+20n)
..... Monitor device

This register stores the droop pulses read from the servo amplifier.

(4) Minor error code storage register (D6+20n) ..... Monitor device

(a) This register stores the corresponding error code (Refer to APPENDIX 1.2) at the minor error occurrence. If another minor error occurs after error code storing, the previous error code is overwritten by the new error code.

(b) Minor error codes can be cleared by an error reset command (M3207+20n).

(5) Major error code storage register (D7+20n) ..... Monitor device

(a) This register stores the corresponding error code (Refer to APPENDIX 1.3) at the major error occurrence. If another major error occurs after error code storing, the previous error code is overwritten by the new error code.

(b) Major error codes can be cleared by an error reset command (M3207+20n).

(6) Servo error code storage register (D8+20n) ..... Monitor device

(a) This register stores the corresponding error code (Refer to APPENDIX 1.4) at the servo error occurrence. If another servo error occurs after error code storing, the previous error code is overwritten by the new error code.

(b) Servo error codes can be cleared by an error reset command (M3208+20n).

(7) Home position return re-travel value storage register (D9+20n) ....…….. Monitor device

If the position stopped in the position specified with the travel value setting (Refer to Section 6.23.1) after the proximity dog ON by a peripheral device is not zero point, it made to travel to zero point by re-travel in the Motion CPU. The travel value (signed) of making it travel to zero point by re-travel at this time is stored. (Data does not change with the last value in the data setting type.)
The following value is stored according to the number of feedback pulses of the motor connected.

Number of feedback pulses	Storage data
Less than 131072[PLS]	Feedback pulses
131072[PLS] or more, 262144[PLS] or less	1/10 of feedback pulses
More than 262144[PLS]	1/10000 of feedback pulses

(8) Travel value after proximity dog ON storage register (D10+20n, D11+20n) …… Monitor device

(a) This register stores the travel value (unsigned) from the proximity dog ON to home position return completion after the home position return start.

(b) The travel value (signed) of the position control is stored at the time of speed/position switching control.

(9) Execute program No. storage register (D12+20n)
..... Monitor device

(a) This register stores the starting program No. at the servo program starting.

(b) The following value is stored in the JOG operation and manual pulse generator operation.
1) JOG operation..... FFFF
2) Manual pulse generator operation ..... FFFE
3) Power supply on..... FF00

(c) When either of the following is being executed using a peripheral device in the test mode, FFFD is stored in this register.
• Home position return.

(10) M-code storage register (D13+20n) ..... Monitor device

(a) This register stores the M-code (Note) set to the executed servo program at the positioning start.
If M-code is not set in the servo program, the value "0" is stored.

(b) It does not change except positioning start using the servo program.

(c) When the PLC ready flag (M2000) turns off to on, the value "0" is stored.

REMARK

(Note): Refer to the following sections for M-codes and reading M-codes.
• M-code ..... Section 7.1
• Reading M-code ..... APPENDIX 3.1

(11) Torque limit value storage register (D14+20n) ..... Monitor device

This register stores the torque limit value imposed on the servo amplifier.
The default value "300[%]" is stored at the power supply of servo amplifier ON.

(12) Data set pointer for constant-speed control (D15+20n)

..... Monitor device

This pointer is used in the constant-speed control when specifying positioning data indirectly and substituting positioning data during operation.
It stores a "point" that indicates which of the values stored in indirect devices has been input to the Motion CPU when positioning is being repeated by using a repetition instructions (FOR-TIMES, FOR-ON or FOR-OFF).
Use this pointer in conjunction with the updated data set pointer (controlled by the user in the Motion SFC program) - which indicates the extent to which the positioning data has been updated using the Motion SFC program - to confirm which positioning data is to be updated.
Data set pointer for constant-speed control and updated data set pointer are described here using the example servo program below.

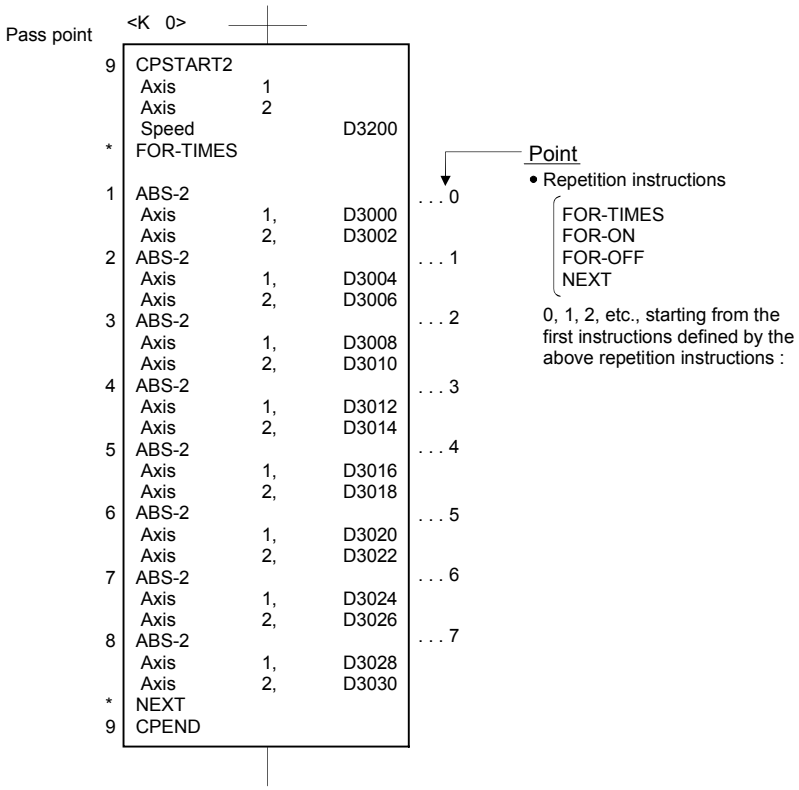

The input situation of positioning data to the Motion CPU is shown the next page by executing the 2-axes constant-speed control using above the servo program and updating the positioning data in indirect devices D3000 to D3006.

[Input situation of positioning data in the Motion CPU]

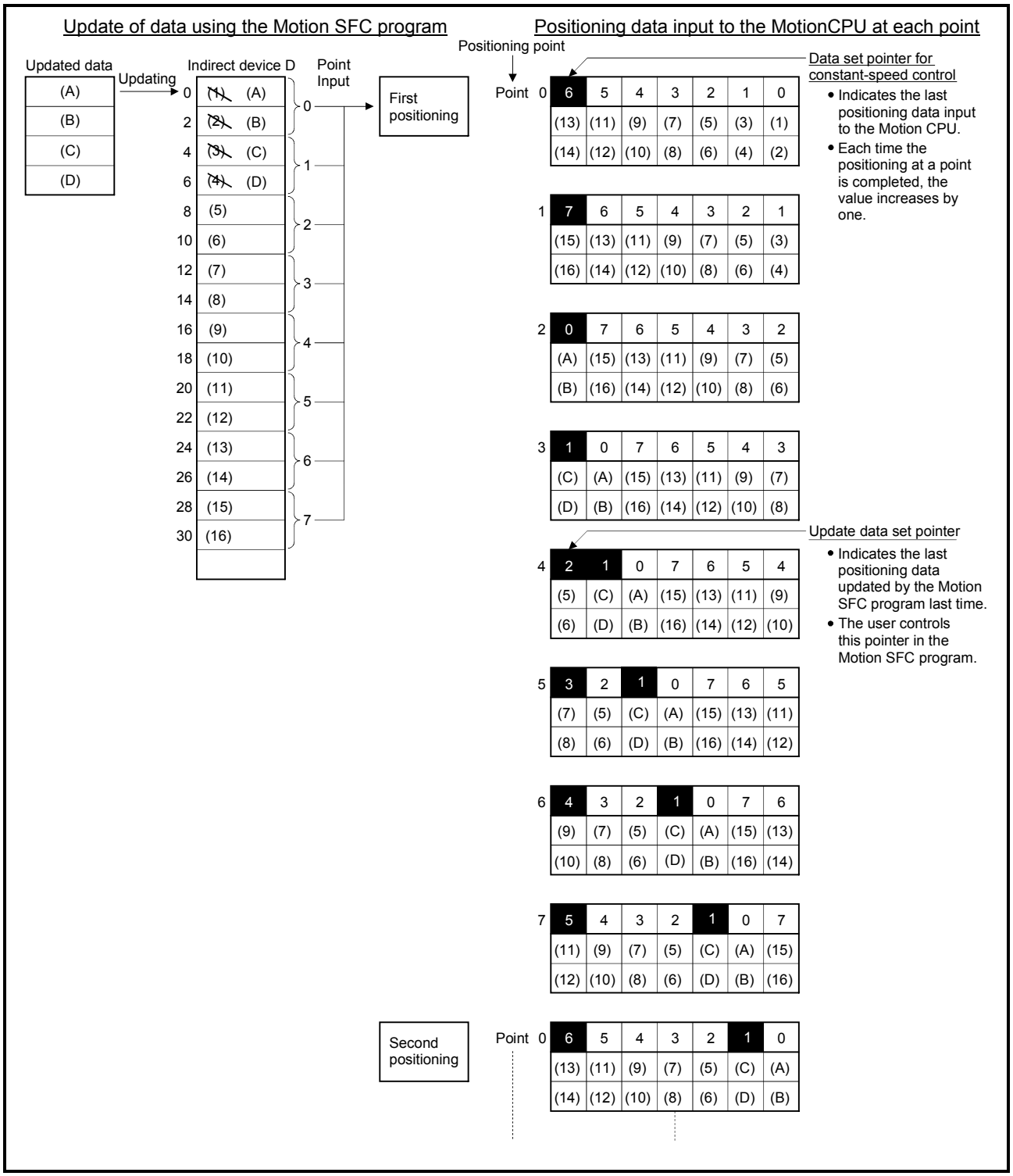

The internal processing shown above is described in the next page.

[Internal processing]

(a) The positioning data ((1) to (14)) of points 0 to 6 is input to the Motion CPU by the starting. The last point "6" of the input data to be input is stored in the data set pointer for constant-speed control at this time.
The "6" stored in the data set pointer for constant-speed control indicates that updating of the positioning data stored in points 0 to 6 is possible.

(b) The positioning data ((A) to (D)) of points 0 to 1 is updated using the Motion SFC program.
The last point "1" of the positioning data to be rewritten is stored in the updated data set pointer (which must be controlled by the user in the Motion SFC program). Updating of positioning data of points 2 to 6 (data (5) to (14)) remains possible.

(c) On completion of the positioning for point 0, the value in the data set pointer for constant-speed control is automatically incremented by one to "7".
The positioning data ((1) to (2)) of point 0 is discarded and the positioning data ((15) to (16)) for point 7 is input to the Motion CPU at this time.

(d) Hereafter, whenever positioning of each point is completed, the positioning data shifts one place.
The positioning data that can be updated is the data after that indicated by the updated data set pointer: this is the data which has not yet been input to the Motion CPU.
Even if the values of the indirect devices D8 and D10 are updated by the Motion SFC program after the positioning completion of the point 3, the positioning data of point 2 that is input to the Motion CPU will not be updated and the second positioning will be executed using the unupdated data. The data set pointer for constant-speed control has not yet been input to the Motion CPU, and indicates the positioning data which a user can update using the Motion SFC program.

POINT
Number of points that can be defined by a repeat instruction • Create the servo program at least eight points. • If there are less than eight points and they include pass points of few travel value, the positioning at each point may be completed, and the data input to the Motion CPU, before the data has been updated using the Motion SFC program. • Create a sufficient number of points to ensure that data will not be input before the Motion CPU has updated the values in the indirect devices.

(13) Travel value change register (D16+20n, D17+20n)
..... Command device

This area is used when the travel value of the position control is changed at the speed/position switching control (Refer to Section 6.15).

(14) Real current value at STOP input storage register (D18+20n, D19+20n) ..... Monitor device

This register stores the real current value at the STOP signal (STOP) input of the Q172LX.

3.2.2 Control change registers

This area stores the JOG operation speed data.

Table 3.1 Data storage area for control change list

Name	Axis 1	Axis 2	Axis 3	Axis 4	Axis 5	Axis 6	Axis 7	Axis 8
JOG speed setting register	D641, D640	D643, D642	D645, D644	D647, D646	D649, D648	D651, D650	D653, D652	D655, D654
	Axis 9	Axis 10	Axis 11	Axis 12	Axis 13	Axis 14	Axis 15	Axis 16
	D657, D656	D659, D658	D661, D660	D663, D662	D665, D664	D667, D666	D669, D668	D671, D670
	Axis 17	Axis 18	Axis 19	Axis 20	Axis 21	Axis 22	Axis 23	Axis 24
	D673, D672	D675, D674	D677, D676	D679, D678	D681, D680	D683, D682	D685, D684	D687, D686
	Axis 25	Axis 26	Axis 27	Axis 28	Axis 29	Axis 30	Axis 31	Axis 32
	D689, D688	D691, D690	D693, D692	D695, D694	D697, D696	D699, D698	D701, D700	D703, D702

(Note): The range of axis No.1 to 8 is valid in the Q172HCPU.

(1) JOG speed setting registers (D640+2n) ..... Command device

(a) This register stores the JOG speed at the JOG operation.

(b) Setting range of the JOG speed is shown below.

Item \ Unit	mm		inch		degree		PLS	
	Setting range	Unit	Setting range	Unit	Setting range	Unit(Note)	Setting range	Unit
JOG speed	1 to 600000000	$\times 10^{-2}$ [mm/min]	1 to 600000000	$\times 10^{-3}$ [inch/min]	1 to 2147483647	$\times 10^{-3}$ [degree/min]	1 to 2147483647	[PLS/s]

(Note) : When the " speed control 10× multiplier setting for degree axis" is set to "valid" in the fixed parameter, the unit is "$\times 10^{-2}$[degree/min] ".

(c) The JOG speed is the value stored in the JOG speed setting registers when the JOG start signal turns off to on.
Even if data is changed during JOG operation, JOG speed cannot be changed.

(d) Refer to Section 6.21 for details of JOG operation.

3.2.3 Common devices

(1) Common bit device SET/RST request register (D704 to D708, D755 to D757) ..... Command device

Because cannot be turn on/off in every bit from the PLC CPU, the bit device is assigned to D register, and each bit device turns on with the lowest rank bit 0 to 1 and each bit device becomes off with 1 to 0.

The details of request register are shown below.

(Refer to Section "3.1.3 Common devices" for the bit device M2000 to M2053.)

Details of the request register

No.	Function	Bit device	Request register
1	PLC ready flag	M2000	D704
2	Speed switching point specified flag	M2040	D705
3	All axes servo ON command	M2042	D706
4	Real/virtual mode switching request (SV22)	M2043	D707
5	JOG operation simultaneous start command	M2048	D708
6	Manual pulse generator 1 enable flag	M2051	D755
7	Manual pulse generator 2 enable flag	M2052	D756
8	Manual pulse generator 3 enable flag	M2053	D757

(2) JOG operation simultaneous start axis setting registers (D710 to D713) ..... Command device

(a) These registers set the axis No. and direction which start simultaneously the JOG operation.

	b15	b14	b13	b12	b11	b10	b9	b8	b7	b6	b5	b4	b3	b2	b1	b0	
D710	Axis 16	Axis 15	Axis 14	Axis 13	Axis 12	Axis 11	Axis 10	Axis 9	Axis 8	Axis 7	Axis 6	Axis 5	Axis 4	Axis 3	Axis 2	Axis 1	Forward rotation JOG
D711	Axis 32	Axis 31	Axis 30	Axis 29	Axis 28	Axis 27	Axis 26	Axis 25	Axis 24	Axis 23	Axis 22	Axis 21	Axis 20	Axis 19	Axis 18	Axis 17	
D712	Axis 16	Axis 15	Axis 14	Axis 13	Axis 12	Axis 11	Axis 10	Axis 9	Axis 8	Axis 7	Axis 6	Axis 5	Axis 4	Axis 3	Axis 2	Axis 1	Reverse rotation JOG
D713	Axis 32	Axis 31	Axis 30	Axis 29	Axis 28	Axis 27	Axis 26	Axis 25	Axis 24	Axis 23	Axis 22	Axis 21	Axis 20	Axis 19	Axis 18	Axis 17	

(Note-1) : Make JOG operation simultaneous start axis setting with 1/0.
1 : Simultaneous start execution
0 : Simultaneous start not execution
(Note-2) : The range of axis No.1 to 8 is valid in the Q172HCPU.

(b) Refer to Section 6.21.3 for details of the JOG operation simultaneous start.

(3) Manual pulse generator axis No. setting registers (D714 to D719) ..... Command device

(a) These registers stores the axis No. controlled with the manual pulse generator.

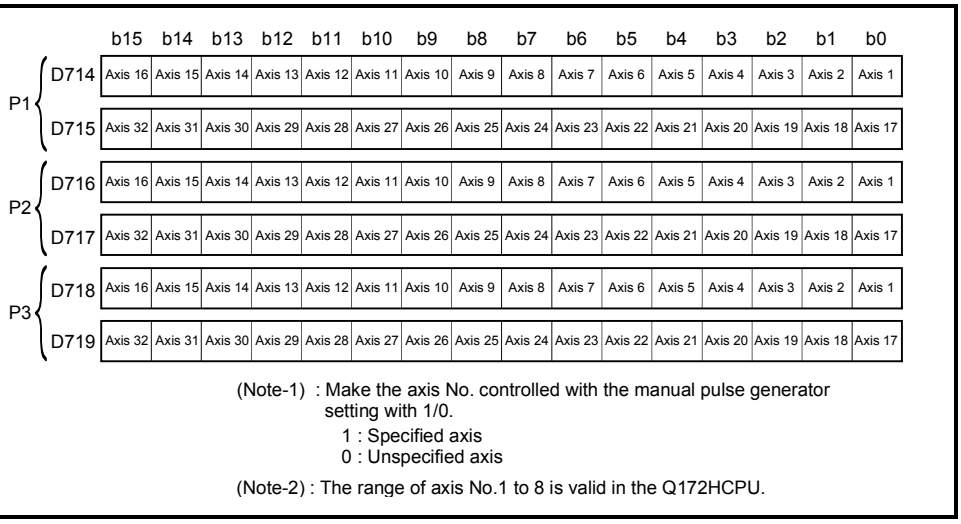

(Note-1) : Make the axis No. controlled with the manual pulse generator setting with 1/0.
1 : Specified axis
0 : Unspecified axis

(Note-2) : The range of axis No.1 to 8 is valid in the Q172HCPU.

(b) Refer to Section 6.22 for details of the manual pulse generator operation.

(4) Manual pulse generator 1-pulse input magnification setting registers (D720 to D751) ..... Command device

(a) These register set the magnification (1 to 10000) per pulse of number of the input pulses from manual pulse generator at the pulse generator operation.

1-pulse input magnification setting register	Axis No.	Setting range	1-pulse input magnification setting register	Axis No.	Setting range
D720	Axis 1	1 to 10000	D736	Axis 17	1 to 10000
D721	Axis 2		D737	Axis 18	
D722	Axis 3		D738	Axis 19	
D723	Axis 4		D739	Axis 20	
D724	Axis 5		D740	Axis 21	
D725	Axis 6		D741	Axis 22	
D726	Axis 7		D742	Axis 23	
D727	Axis 8		D743	Axis 24	
D728	Axis 9		D744	Axis 25	
D729	Axis 10		D745	Axis 26	
D730	Axis 11		D746	Axis 27	
D731	Axis 12		D747	Axis 28	
D732	Axis 13		D748	Axis 29	
D733	Axis 14		D749	Axis 30	
D734	Axis 15		D750	Axis 31	
D735	Axis 16		D751	Axis 32	

(Note-1): The range of axis No.1 to 8 is valid in the Q172HCPU.

(b) Refer to Section 6.22 for details of the manual pulse generator operation.

(5) Manual pulse generator smoothing magnification setting registers (D752 to D754) ..... Command device

(a) These registers set the smoothing time constants of manual pulse generators.

Manual pulse generator smoothing magnification setting register	Setting range
Manual pulse generator 1 (P1): D752	0 to 59
Manual pulse generator 2 (P1): D753	
Manual pulse generator 3 (P1): D754	

(b) When the smoothing magnification is set, the smoothing time constant is as indicated by the following expression.
Smoothing time constant (t) = (smoothing magnification + 1) × 56.8 [ms]

(c) Operation

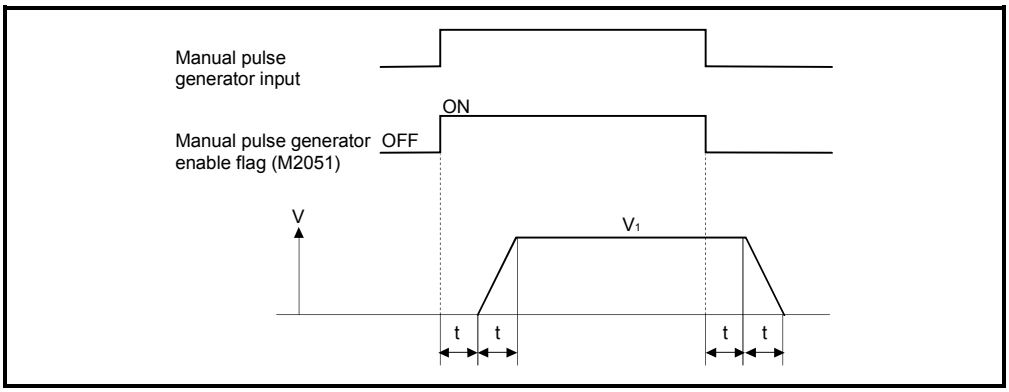

Output speed (V_1) [PLS/s] = (Number of input pulses/s) × (Manual pulse generator 1-pulse input magnification setting)

Travel value (L) = [(Travel value per pulse) × Number of input pulses] [(Manual pulse generator 1-pulse input magnification setting)]

REMARK

(1) The travel value per pulse of the manual pulse generator is shown below.

- Setting unit
  - mm :0.1[μm]
  - inch :0.00001[inch]
  - degree :0.00001[degree]
  - PLS :1[PLS]

(2) The smoothing time constant is 56.8[ms] to 3408[ms].

(6) Real mode axis information register (D790, D791)

..... Monitor device

This signal is used to store the information used as a real mode axis at the time of switching from real mode to virtual mode.

The real mode axis information does not change at the time of switching from virtual mode to real mode.

	b15	b14	b13	b12	b11	b10	b9	b8	b7	b6	b5	b4	b3	b2	b1	b0
D790	Axis 16	Axis 15	Axis 14	Axis 13	Axis 12	Axis 11	Axis 10	Axis 9	Axis 8	Axis 7	Axis 6	Axis 5	Axis 4	Axis 3	Axis 2	Axis 1
D791	Axis 32	Axis 31	Axis 30	Axis 29	Axis 28	Axis 27	Axis 26	Axis 25	Axis 24	Axis 23	Axis 22	Axis 21	Axis 20	Axis 19	Axis 18	Axis 17

→ Real mode axis information
- 0 : Real mode axis
- 1 : Except real mode axis

(Note-1): The range of axis No.1 to 8 is valid in the Q172HCPU.

(Note-2): Refer to APPENDIX 2.1 of the "Q173HCPU/Q172HCPU Motion controller (SV22) Programming Manual (VIRTUAL MODE)" for the expression method of the axis number corresponding to each bit of word data.

3.3 Motion Registers (#)

There are motion registers (#0 to #8191) in the Motion CPU. #8000 to #8063 are used as the Motion SFC dedicated device and #8064 to #8191 are used as the servo monitor device. Refer to the "Q173HCPU/Q172HCPU Motion Controller (SV13/SV22) Programming Manual (Motion SFC)" for details of the motion registers and Motion SFC dedicated device.

(1) Servo monitor devices (#8064 to #8191) ..... Monitor device

Information about "servo amplifier type", "motor current" and "motor speed" for each axis is stored the servo monitor devices.
The details of the storage data are shown below.

Axis No.	Device No.	Signal name
1	#8064 to #8067	
2	#8068 to #8071	
3	#8072 to #8075	
4	#8076 to #8079	
5	#8080 to #8083	
6	#8084 to #8087	
7	#8088 to #8091	
8	#8092 to #8095	
9	#8096 to #8099	
10	#8100 to #8103	
11	#8104 to #8107	
12	#8108 to #8111	
13	#8112 to #8115	
14	#8116 to #8119	
15	#8120 to #8123	
16	#8124 to #8127	
17	#8128 to #8131	
18	#8132 to #8135	
19	#8136 to #8139	
20	#8140 to #8143	
21	#8144 to #8147	
22	#8148 to #8151	
23	#8152 to #8155	
24	#8156 to #8159	
25	#8160 to #8163	
26	#8164 to #8167	
27	#8168 to #8171	
28	#8172 to #8175	
29	#8176 to #8179	
30	#8180 to #8183	
31	#8184 to #8187	
32	#8188 to #8191	

	Signal name (Note-1)	Signal description	Refresh cycle	Signal direction
+0	Servo amplifier type	0 : Unused 256 : MR-J3-B 257 : MR-J3-B (Fully closed loop control) 258 : MR-J3-B (Linear)	When the servo amplifier power-on	Monitor devise
+1	Motor current	×0.1[%]	Operation cycle 1.7[ms] or less: Operation cycle Operation cycle 3.5[ms] or more: 3.5[ms]	
+2	Motor speed	×0.1[r/min]		
+3				

(Note-1) : The value that the lowest servo monitor device No. was added "+0, +1 ···" on each axis is shown.

3.4 Special Relays (SP.M)

There are 256 special relay points of M9000 to M9255 in the Motion CPU.
Of these, 7 points of the M9073 to M9079 are used for the positioning control, and their applications are indicated in Table 3.2. (Refer to APPENDIX 2.1 "Special relays" for the applications of the special relays except M9073 to M9079.)

Table 3.2 Special relay list

Device No.	Signal name	Refresh cycle	Signal type
M9073	PCPU WDT error flag	Main cycle	Status signal
M9074	PCPU REDAY complete flag		
M9075	TEST mode ON flag		
M9076	External forced stop input flag		
M9077	Manual pulse generator axis setting error flag		
M9078	TEST mode request error flag		
M9079	Servo program setting error flag		

(1) PCPU WDT error flag (M9073) ..... Status signal

This flag turns on when a "watchdog timer error" is detected of the Motion CPU self-diagnosis function.
When the Motion CPU detects a WDT error, it executes an immediate stop without deceleration of the operating axes.
If the Motion CPU WDT error flag has turn on, reset the Motion CPU.
If M9073 remains on after resetting, there is a fault at the Motion CPU side.
The error cause is stored in the "Motion CPU WDT error cause (D9184)".
(Refer to Section 3.5).

(2) PCPU REDAY complete flag (M9074) ……..... Status signal

This flag is used as judgement of the normal or abnormal in the Motion CPU side using the PLC program.

(a) When the PLC ready flag (M2000) turns off to on, the fixed parameters, servo parameters and limit switch output data are checked, and if error is not detected, this flag turns on.
The servo parameters are written to the servo amplifiers and the M-codes are cleared.

(b) This flag turns off when the PLC ready flag (M2000) turns off.

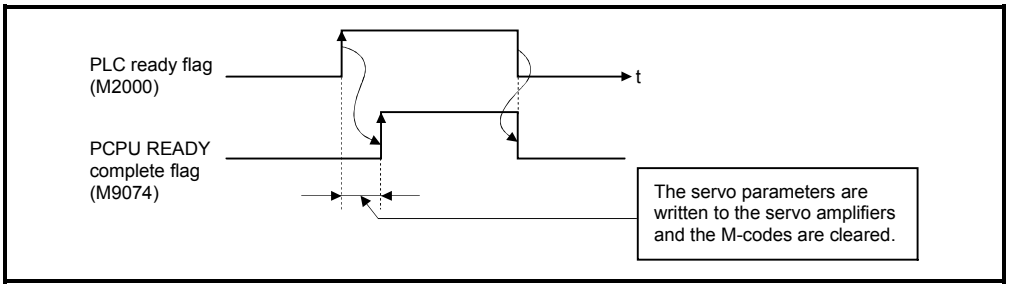

(3) TEST mode ON flag (M9075) ..... Status signal

(a) This flag is used as judgement of during the test mode or not using a peripheral.
Use it for an interlock, etc. at the starting of the servo program using the Motion SFC program.
• OFF ..... Except the test mode
• ON ..... During the test mode

(b) If the test mode request is executed in the test mode request from the peripheral device, the TEST mode request error flag (M9078) turns on.

(4) External forced stop input flag (M9076) ..... Status signal

This flag checks the external forced stop input signal ON/OFF.
• OFF ..... During the external forced stop input on
• ON ..... During the external forced stop input off

POINTS

(1) If the forced stop signal is input during positioning, the feed current value is advanced within the rapid stop deceleration time set in the parameter block. At the same time, the servo OFF state is established because the all axes servo ON command (M2042) turns off.
When the rapid stop deceleration time has elapsed after input of the forced stop signal, the feed current value returns to the value at the point when the emergency stop was initiated.

(2) If the forced stop is reset before the emergency stop deceleration time has elapsed, a servo error occurs.

(5) Manual pulse generator axis setting error flag (M9077)
..... Status signal

(a) This flag is use as judgement of normal or abnormal setting of the manual pulse generator axis No. setting registers (D714 to D719).
• OFF ..... D714 to D719 is normal
• ON ..... D714 to D719 is abnormal

(b) When M9077 turns on, the error contents are stored in the manual pulse generator axis setting error information (D9185 to D9187).

(6) TEST mode request error flag (M9078) ..... Status signal

(a) This flag turns on when the test mode is not executed in the test mode request using a peripheral device.

(b) When M9078 turns on, the error contents are stored in the test mode request error information (D9182, D9183).

(7) Servo program setting error flag (M9079) ..... Status signal

This flag is used as judgement of normal or abnormal for the servo program positioning data.
• OFF ..... Normal
• ON ..... Abnormal

3.5 Special Registers (SP.D)

There are 256 special register points of D9000 to D9255 in the Motion CPU.
Of these, 23 points of the D9112 and D9180 to D9201 are used for the positioning control.
The special registers used for positioning are shown below. (Refer to APPENDIX 2.2 "Special registers" for the applications of special registers except D9112 and D9180 to D9201.)

Table 3.3 Special register list

Device No.	Signal name	Refresh cycle	Fetch cycle	Signal direction
D9112	Connect/disconnect	Main cycle	Main cycle	Command device/ Monitor device
D9180	Unusable	—	—	—
D9181				
D9182	Test mode request error information	At test mode request		Monitor device
D9183				
D9184	Motion CPU WDT error cause	At Motion CPU WDT error occurrence		
D9185	Manual pulse generator axis setting error information	At the manual pulse generator enable flag ↑		
D9186				
D9187				
D9188	Motion operation cycle	Operation cycle		
D9189	Error program No.	At start		
D9190	Error item information			
D9191	Servo amplifier loading information	At power supply on/ operation cycle		
D9192				
D9193	Real/virtual mode switching error information (SV22)	At virtual mode transition		
D9194				
D9195				
D9196	PC link communication error codes	Operation cycle		
D9197	Operation cycle of the Motion CPU setting	At power supply on		
D9198	Unusable	—	—	—
D9199				
D9200	State of switch	Main cycle		Monitor device
D9201	State of LED	Immediate		

(1) Connect/disconnect (D9112)

..... Command device/Monitor device

This function is used to connect/disconnect the SSCNET communication temporarily, when the servo amplifiers or SSCNETⅢ cables on the SSCNET system are exchanged during power supply on of the Motion CPU. The user side requires to connect/disconnect for a system, and the system side stores the states of command accept waiting or execute waiting for connect/disconnect. Moreover, also connect the servo amplifiers disconnected with the connect/disconnect device using this device. When turning the power supply OFF/ON for the axis 1 of SSCNET system, there is no necessity for connect/disconnect processing.

- 0 …… Connect/disconnect command accept waiting
- -1 …….. Connect/disconnect execute waiting
- 1 to 32 ….. Disconnect command
- -10 ……. Re-connect command
- -2 ……... Connect/disconnect execute command

(2) Test mode request error information (D9182, D9183)

..... Monitor device

If there are operating axis at a test mode request from a peripheral device, a test mode request error occurs, the test mode request error flag (M9078) turns on, and the during operation/stop data of the each axis are stored.

	b15	b14	b13	b12	b11	b10	b9	b8	b7	b6	b5	b4	b3	b2	b1	b0
D9182	Axis 16	Axis 15	Axis 14	Axis 13	Axis 12	Axis 11	Axis 10	Axis 9	Axis 8	Axis 7	Axis 6	Axis 5	Axis 4	Axis 3	Axis 2	Axis 1
D9183	Axis 32	Axis 31	Axis 30	Axis 29	Axis 28	Axis 27	Axis 26	Axis 25	Axis 24	Axis 23	Axis 22	Axis 21	Axis 20	Axis 19	Axis 18	Axis 17

→ Stores the during operation/stop data of each axis
- 0 : During stop
- 1 : During operation

(Note): The range of axis No.1 to 8 is valid in the Q172HCPU.

(3) Motion CPU WDT error cause (D9184) ……..... Monitor device

This register is used as judgement of the error contents in the Motion CPU.

Error code	Error cause	Operation when error occurs	Action to take
1	S/W fault 1	All axes stop immediately, after which operation cannot be started.	• Reset with the reset key. • If the error reoccurs after resetting, 1) Change the operation cycle into a large value in the system setting. 2) Reduce the number of command execution of the event task or NMI task in the system setting.
2	Operation cycle time over		
3	Q bus WDT error		• Reset with the reset key. • If the error reoccurs after resetting, the relevant module or the relevant slot (base unit) is probably faulty: replace the module/base unit.
4	WDT error		• Reset with the reset key. • If the error reoccurs after resetting, explain the error symptom and get advice from our sales representaitive.
30	Information processor H/W error		
201 to 215	Q bus H/W fault 201 Error contents 01 : Q bus error 1 02 : Q bus error 2 04 : Q bus error 4 08 : Q bus error 8 Error code = Total of the error contents + 200		• Reset with the reset key. • If the error reoccurs after resetting, the relevant module or the relevant slot (base unit) is probably faulty: replace the module/base unit.
250 to 253	Servo amplifier interface H/W fault 250 Faulty SSCNETⅢ No. 0 : SSCNETⅢ 1 1 : SSCENTⅢ 2 Error code = Total of the faulty SSCNETⅢ No. + 250		
300	S/W fault3		• Reset with the reset key.
301	8 or more points of CPSTART instruction were used to start programs in excess of simultaneously startable program. Number of simultaneous startable programs: 14		• Reset with the reset key. • Use 8 or more points of CPSTART instruction to start programs within the number of simultaneously startable programs.

(4) Manual pulse generator axis setting error information (D9185 to D9187) ..... Monitor device

The setting information is checked when the manual pulse generator enable signal turns off to on, if an error is found, the following error information is stored into D9185 to D9187 and the manual pulse generator axis setting error flag (M9077) turns on.

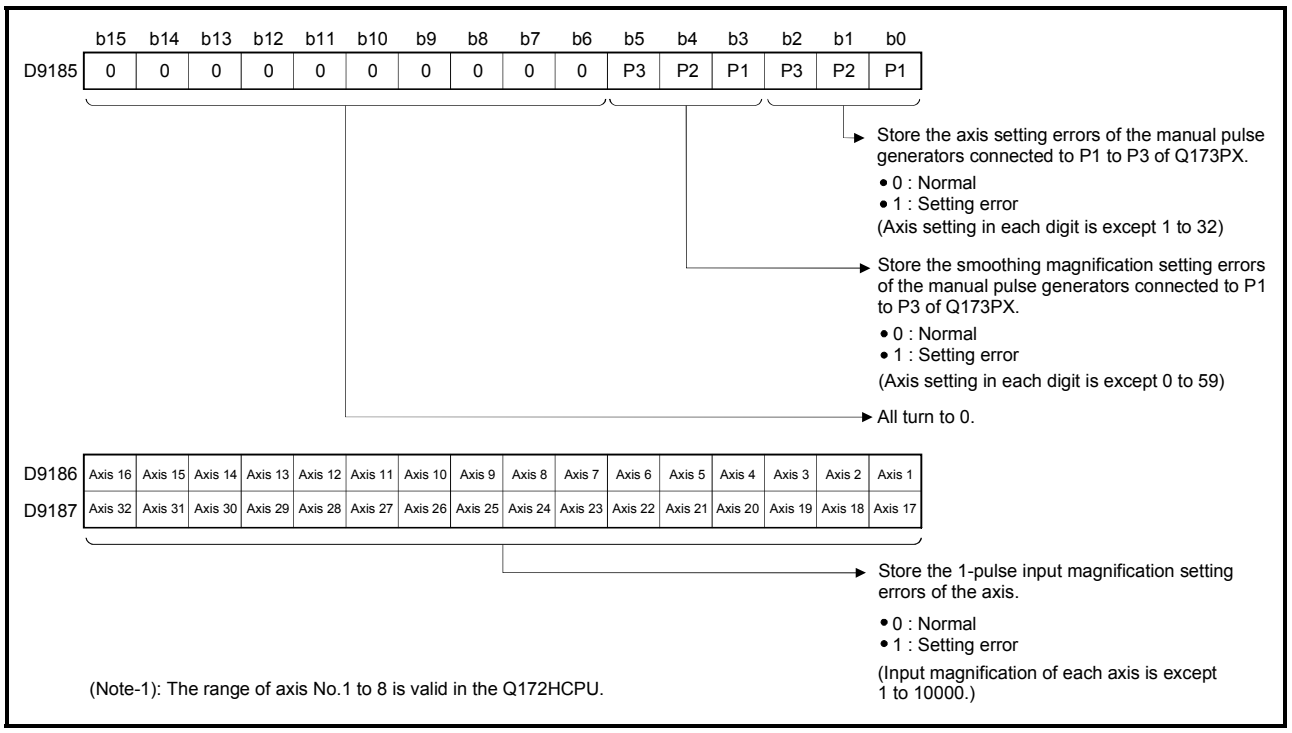

(5) Motion operation cycle (D9188) ..... Monitor device

The time which motion operation took for every motion operation cycle is stored in [μs] unit.

(6) Error program No. (D9189) ..... Monitor device

(a) When the servo program error occurs at the servo program operation, the program setting error flag (M9079) turns on and the error servo program No. (0 to 4095).

(b) If an error occurs in another servo program when error program No. has been stored, the program No. of the new error is stored.

(7) Error item information (D9190) ..... Monitor device

When the servo program error occurs at the servo program operation, the program setting error flag (M9079) turns on and the error code corresponds to the error setting item is stored.

Refer to APPENDIX 1.1 for details of servo program setting errors.

(8) Servo amplifier loading information (D9191 to D9192)

..... Monitor device

The installation state of the servo amplifier is checked at the power supply on or resetting of the Motion CPU and its results are stored in this device.
If communication with servo amplifier stops, it is reset.
Installation state is stored also about the axis which from non-installation to installation or from installation to non-installation after power supply on.

	b15	b14	b13	b12	b11	b10	b9	b8	b7	b6	b5	b4	b3	b2	b1	b0
D9191	Axis 16	Axis 15	Axis 14	Axis 13	Axis 12	Axis 11	Axis 10	Axis 9	Axis 8	Axis 7	Axis 6	Axis 5	Axis 4	Axis 3	Axis 2	Axis 1
D9192	Axis 32	Axis 31	Axis 30	Axis 29	Axis 28	Axis 27	Axis 26	Axis 25	Axis 24	Axis 23	Axis 22	Axis 21	Axis 20	Axis 19	Axis 18	Axis 17

Servo amplifier installation state
• Installation. 1
• Non-installation. . . . 0

(Note): The range of axis No.1 to 8 is valid in the Q172HCPU.

(a) Servo amplifier installation state

1) Installation/non-installation state

• "Installation" state ..…..... The servo amplifier is normal. (Communication with the servo amplifier is normal.)

• "Non-installation" state ... No servo amplifier is installed. The servo amplifier power is off. Normal communication with the servo amplifier is not possible due to a connecting cable fault, etc.

2) The system settings and servo amplifier installation states are shown below.

System Settings	Servo amplifier	
	Installation	Non-installation
Used (axis No. setting)	1 is stored	0 is stored
Unused	0 is stored	

(9) PC link communication error codes (D9196) ..... Monitor device

When an error occurs during the PC link communication, the error code is stored in this device.

PC communication error code storage register	Contents
D9196	00: No error 01: Receiving timing error 02: CRC error 03: Communication response code error 04: Received frame error 05: Communication task start error (Each error code is reset to "00" when normal communication is restarted.)

Refer to APPENDIX 1.5 for details of the PC link communication errors.

(10) Operation cycle of the Motion CPU setting (D9197)

..... Monitor device

The setting operation cycle is stored in [μs] unit.

When the "Automatic setting" is set in the system setting, the operation cycle corresponding to the number of setting axes. When "0.4[ms] / 0.8[ms] / 1.7[ms] / 3.5[ms] / 7.1[ms] / 14.2[ms]" is set in the system setting, the operation cycle corresponding to each setting.

(Note): If the servo amplifiers of 9 axes or more are connected to one SSCNETⅢ system, it does not support an operation cycle of 0.4[ms]. 0.8[ms] is used as the real operation cycle, even if 0.4[ms] is set in the system setting.

(11) State of switch (D9200) …….. Monitor device

The switch state of CPU is stored in the form of the following.

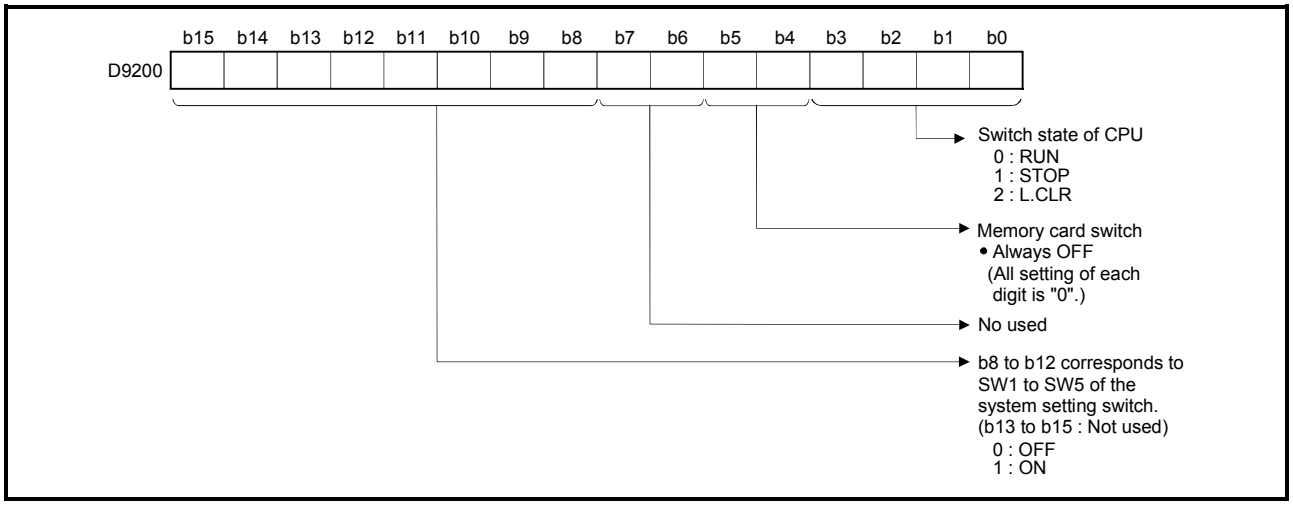

(12) State of LED (D9201)…….…… Monitor device

It stores whether the LED of CPU is in which state in next by the following bit patterns. 0 is OFF, 1 is ON and 2 is Flicker.)

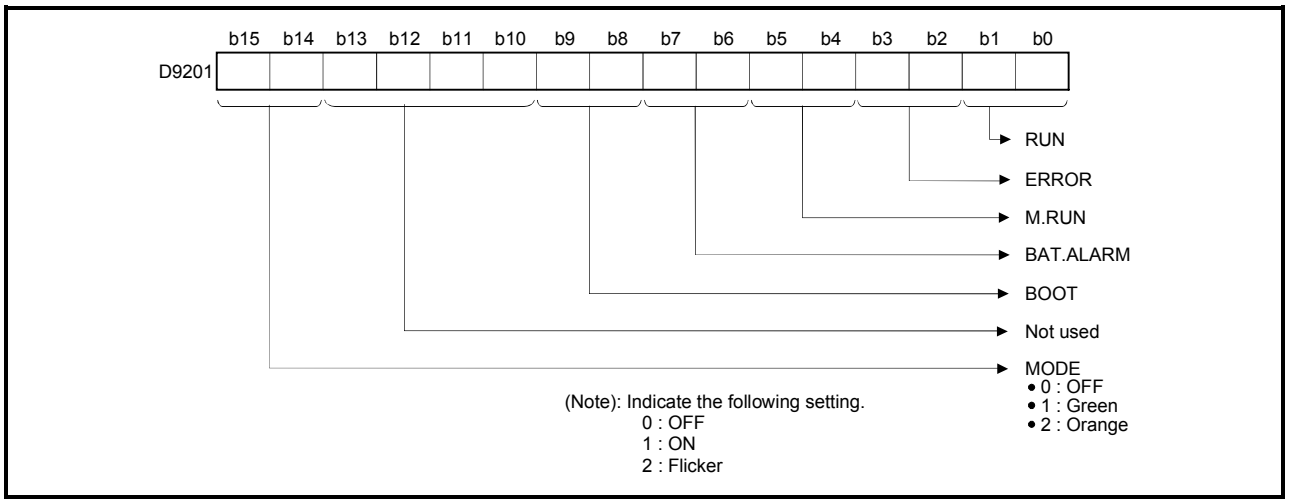

MEMO

4. PARAMETERS FOR POSITIONING CONTROL

4.1 System Settings

In the Multiple CPU system, the common system parameters and individual parameters are set for each CPU and written to each CPU.

(1) The base settings, Multiple CPU settings and Motion slot settings are set in the common system parameter setting.

(2) The basic system settings, self CPU installation position setting, servo amplifier/motor setting, high-speed read setting and battery setting are set in the individual parameter setting.

(3) The data setting and correction can be performed in dialog form using a peripheral device.
(Refer to the "Q173HCPU/Q172HCPU Motion Controller Programming Manual (COMMON)" for details of the setting contents.)

4.2 Fixed Parameters

(1) The fixed parameters are set for each axis and their data is fixed based on the mechanical system, etc.

(2) The fixed parameters are set using a peripheral device.

(3) The fixed parameters to be set are shown in Table 4.1.

Table 4.1 Fixed parameter list

No.	Item	Setting range								Initial value	Units	Remarks	Section
		mm		inch		degree		PLS					
		Setting range	Units	Setting range	Units	Setting range	Units	Setting range	Units				
1	Unit setting	0	—	1	—	2	—	3	—	3	—	• Set the command value for each axis at the positioning control.	—
2	Travel value per pulse (A): Number of pulses per rotation (AP)	1 to 2147483647[PLS]								20000	PLS	• Set the number of feedback pulses per motor rotation based on the mechanical system.	4.2.1
3	Travel value per pulse (AL): Travel value per rotation (AL)	0.1 to 214748364.7	μm	0.00001 to 21474.83647	inch	0.00001 to 21474.83647	degree	1 to 2147483647	PLS	20000		• Set the travel value per motor based on the mechanical system.	
4	Backlash compensation amount (Note)	0 to 6553.5		0 to 0.65535		0 to 0.65535		0 to 65535		0		• Set the backlash amount of the machine. • Every time of the positioning direction changes at the positioning, compensation by the backlash compensation amount is executed. The expression below shows the setting range. 0 ≦ (backlash compensation amount) × AP/AL ≦ 65535	7.2
5	Upper stroke limit (Note)	-214748364.8 to 214748364.7		-21474.83648 to 21474.83647		0 to 359.99999		-2147483648 to 2147483647		2147483647		• Set the upper limit for the machine travel range. The expression below shows the setting range. (SV13 only) -2147483648 ≦ (upper stroke limit value) × AP/AL ≦ 2147483647	4.2.3
6	Lower stroke limit (Note)	-214748364.8 to 214748364.7		-21474.83648 to 21474.83647		0 to 359.99999		-2147483648 to 2147483647		0		• Set the lower limit for the machine travel range. The expression below shows the setting range. (SV13 only) -2147483648 ≦ (lower stroke limit value) × AP/AL ≦ 2147483647	
7	Command in-position range (Note)	0.1 to 214748364.7		0.00001 to 21474.83647		0.00001 to 359.99999		1 to 2147483647		100		• Set the position at which the command in-position signal (M2403+20n) turns on [(positioning address) - (current value)]. The expression below shows the setting range. 1 ≦ (command in-position range) × AP/AL ≦ 32767	4.2.4
8	Speed control 10×multiplier setting for degree axis	—	—	—	—	Invalid/Valid	—	—	—	Invalid	—	• Set whether the positioning control is executed with a value 10×multiplier the speed of a command speed setting, when a control unit is degree axis.	4.2.5

(Note): The display of the possible setting range changes according to the electronic gear value.

4.2.1 Number of pulses/travel value per rotation

The "Electronic gear function" adjusts the pulse calculated and output by the parameter set in the Q173HCPU/Q172HCPU and the real travel value of machine.
It is defined by the "Number of pulses per rotation" and "Travel value per revolution".

POINTS

(1) The mechanical system error of the command travel value and real travel value is rectified by adjustment the "electronic gear".

(2) The value of less than 1 pulse that cannot be execute a pulse output when the machine travels is incremented in the Q173HCPU/Q172HCPU, and a total incremented pulse output is performed when the total incremented value becomes more than 1 pulse.

(3) The total incremented value of less than 1 pulse that cannot be execute a pulse output is cleared and it is referred to as "0" at the home position return completion, current value change completion, speed-switching control start (except the feed current value update) and fixed-pitch feed control start. (When the total incremented value is cleared, the error occurs to the feed machine value only a part to have been cleared.)

"Number of pulses/travel value per rotation" are shown below.

(1) Number of pulses/travel value per rotation

Number of pulses(AP)/travel value(AL) per rotation is an item which determines how many rotations (number of pulses per rotation) of the servomotor in order to make it a machine as the travel value ordered by the program.
The position control toward the servomotor is controlled with the number of feedback pulses of the encoder connected to the servomotor in the servo amplifier.
The control content of the Motion CPU is shown below.

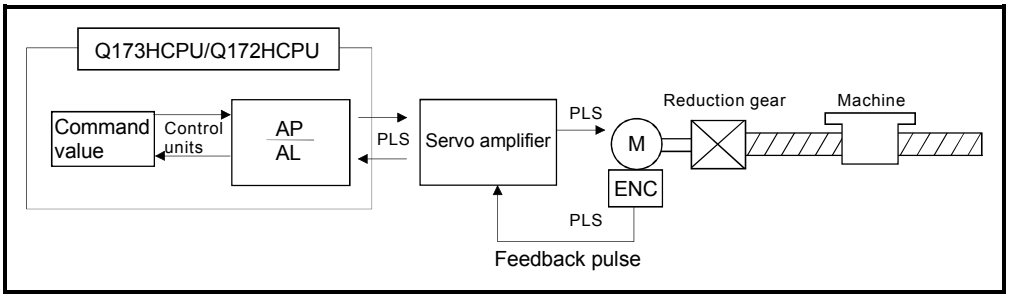

Fig. 4.1 Control content of the Motion CPU

For example, suppose that the servomotor was connected to the ball screw. Because the travel value (⊿S) of machine per motor rotation is [mm] / [inch] unit, the travel value (positioning address) set in the program is commanded in [mm] / [inch] unit. However, the servomotor is positioning controlled by the servo amplifier in pulse unit.

Therefore, AP/AL is set so that the following expression of relations may be materialized in order to convert the travel value of [mm] / [inch] unit set in the program into a pulse.

Number of pulses per motor rotation = AP
Travel value of machine per motor rotation = AL

$$\text{Electronic gear} = \frac{AP}{AL} \quad \text{. . . . . (1)}$$

(There is a range which can be set in the numerical value set as AP/AL, so it is necessary to make the setting range of AP/AL the value calculated from the above expression (reduced) of relations.)

Example of the real setting is shown below.

(a) For ball screw
When the ball screw pitch is 20[mm], the servomotor is HF-KP (262144[PLS/rev]) and direct connection (No reduction gear) is set.

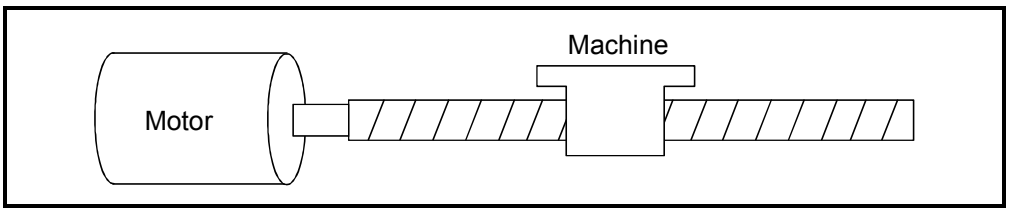

Fig. 4.2 For ball screw

First, find how many millimeters the load (machine) will travel (AL) when the servomotor runs for one rotation (AP).

AP (Number of pulses per motor rotation) = 262144[PLS]
AL (Travel value of machine per rotation)
= Ball screw pitch × Reduction ratio
= 20[mm]

Substitute this for the above expression (1).

$$\frac{AP}{AL} = \frac{262144[PLS]}{20[mm]}$$

Although it becomes above, when a control unit is set to [mm] unit, the minimum unit of the command value in a program is 0.1[μm] and converted from 20[mm] (20.0000[mm]) to 20000.0[μm].

$$\frac{AP}{AL} = \frac{262144[PLS]}{20000.0[\mu m]}$$

The travel value per motor rotation in this example is 0.000076[mm].
For example, when ordering the travel value of 19[mm], it becomes 249036.8[PLS] and the fraction of 0.8[PLS]. At this time, the Motion CPU orders the travel value of 249036[PLS] to the servomotor and the fraction is memorized in the Motion CPU.
Positioning is performed by seasoning the travel value with this fraction at the next positioning.

4.2.2 Backlash compensation amount

(1) Backlash compensation amount can be set within the following range.
(Refer to Section "7.2 Backlash Compensation Function" for details.)

$$0 \leqq \frac{\text{Backlash compensation amount} \times \text{Number of pulses per rotation (AP)}}{\text{Travel value per rotation (AL)}} (=A) \leqq 65535[\text{PLS}]$$

(2) The servo error may occur depending on the type of the servo amplifier (servomotor) or operation cycle even if the backlash compensation amount which fulfill the above condition.
Set the backlash compensation amount within the following range in order for servo error may not occur.

$$A \leqq \frac{\text{Maximum motor speed [r/min]} \times 1.2 \times \text{Encoder resolution [PLS]} \times \text{Operation cycle [ms]}}{60[\text{s}] \times 1000[\text{ms}]} [\text{PLS}]$$

4.2.3 Upper/lower stroke limit value

The upper/lower limit value for the travel range of the mechanical system is set.

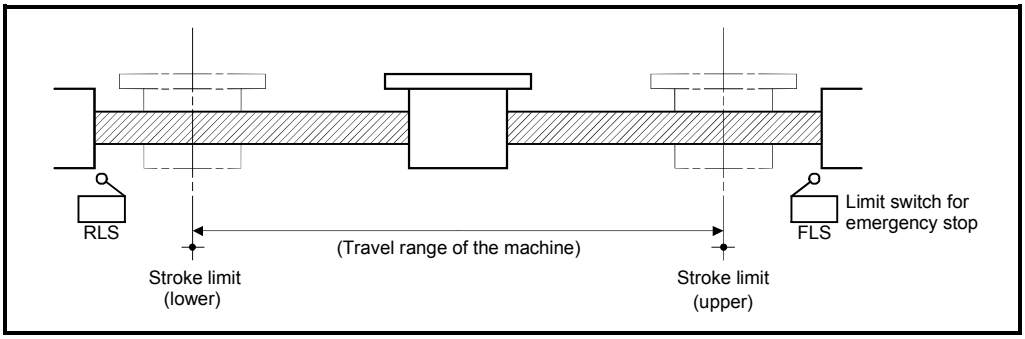

Fig. 4.3 Travel range at the upper/lower stroke limit value setting

(1) Stroke limit range check

The stroke limit range is checked at the following start or during operation.

Operation start	Check	Remarks
• Position follow-up control • Constant-speed control • Speed switching control • Positioning control • Fixed-pitch feed control	Check	• It is checked whether the feed current value is within the stroke limit range or not at the positioning start. If it outside the range, an error occurs (error code: 106) and positioning is not executed. • If the interpolation path exceeds the stroke limit range during circular interpolation start, an error occurs (error codes: 207, 208) and deceleration stop is executed. • If the current value exceeds the stroke limit range, deceleration stop is executed.
• Speed control (Ⅰ) • Speed control (Ⅱ)	Not check	• The current value becomes "0", and operation continues until the external limit signal (FLS, RLS, STOP) is received.
• Speed/position switching control (including restart)	Check	• It is checked after the switch to position control.
• JOG operation		• When the current value is executed a deceleration stop from current command speed, if the current value exceeds the stroke limit range, a deceleration stop is made before a stroke limit. (Error code: 207) Travel to the direction that returns the axis into the stroke range is possible.
• Manual pulse generator operation		• If the current value exceeds the stroke limit range, it stops at stroke limit. (Error code: 207) In this case, a deceleration stop is not made. Travel to the direction that returns the axis into the stroke range is possible.

POINTS

(1) Besides setting the upper/lower stroke limit value in the fixed parameters, the stroke limit range can also be set by using the external limit signals (FLS, RLS).

(2) When the external limit signal turns off, a deceleration stop is executed. "Deceleration time" and "Rapid stop deceleration time" can be used in the parameter block for deceleration stop time.

4.2.4 Command in-position range

The command in-position is the difference between the positioning address (command position) and feed current value.
Once the value for the command in-position has been set, the command in-position signal (M2403+20n) turns on when the difference between the command position and the feed current value enters the set range [(command position - feed current value) ≦ (command in-position range)].
The command in-position range check is executed continuously during position control.

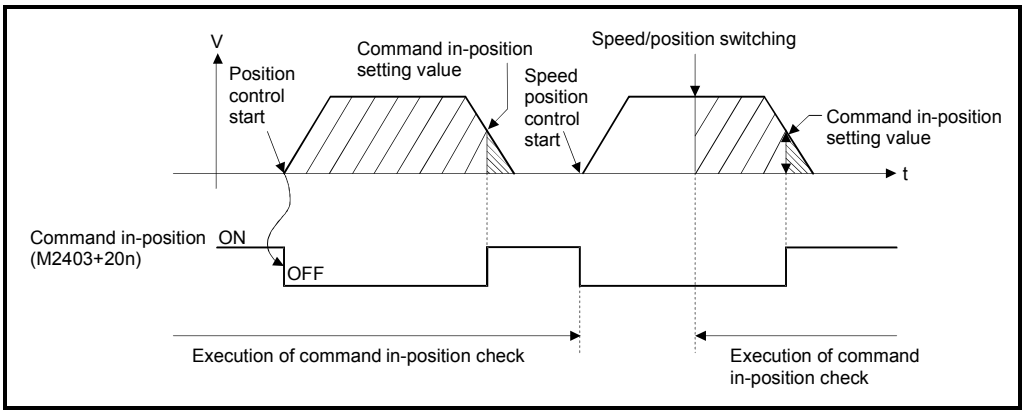

4.2.5 Speed control 10×multiplier setting for degree axis

The setting range of command speed is 0.001 to 2147483.647[degree/min] normally in the axis of control unit [degree]. However, when the "speed control 10×multiplier setting for degree axis" is set to "valid" in the fixed parameter the speed setting range increases 10×multiplier "0.01 to 21474836.47[degree/min]".

(1) When the "speed control 10×multiplier setting for degree axis" is set to "valid", the positioning control is executed by the speed increased 10×multiplier command speed set in the servo program or servo parameter, and speed limit value.

(2) In the interpolation control for the axis of "control unit [degree] and [except degree]", if the interpolation control unit of parameter block is set as [degree]," the positioning control is executed by the speed increased 10×multiplier command speed and speed limit value.

(3) When the "speed control 10×multiplier setting for degree axis" is set as "valid", 2 figures below the decimal point of ***.** [degree/min] is displayed on the screen of SW6RN-GSV□P.

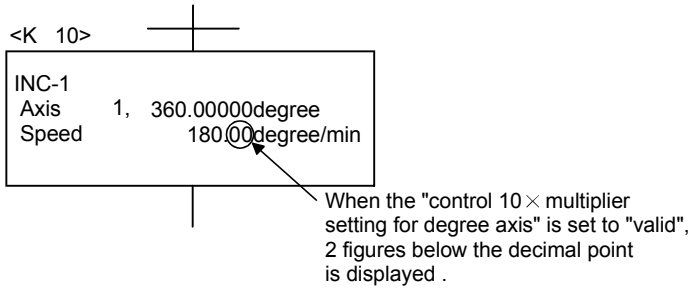

(4) Speed setting range in the interpolation operation is shown below.

(a) Combined-speed specification/Long-axis speed specification
If the "speed control 10×multiplier setting for degree axis" is set to "valid" even by one axis among interpolation axes, the speed setting range is "0.01 to 21474836.47[degree/min] ".

(b) Reference-axis speed specification
If the "speed control 10×multiplier setting for degree axis" is set to "valid" in the specified reference axis, the speed setting range is "0.01 to 21474836.47[degree/min] ".

Example

• An example for positioning control is shown below when the "speed control 10 × multiplier setting for degree axis" of fixed parameter and "interpolation control unit" of parameter block are set as follows.

• Speed control 10 × multiplier setting for degree axis

Axis	Speed control 10 × multiplier setting for degree axis
Axis 1	Invalid
Axis 2	Valid

• Interpolation control unit of parameter block

	Block 10
Interpolation control unit	degree

(1) 1 axis linear positioning control program (Axis 1)

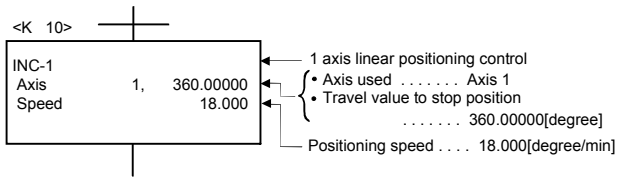

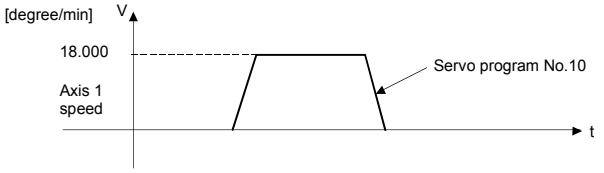

(2) 1 axis linear positioning control program (Axis 2)

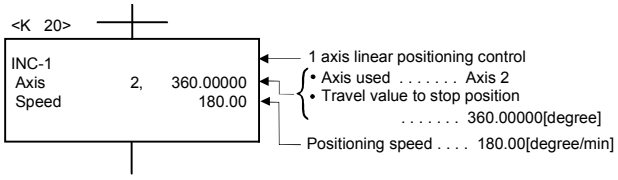

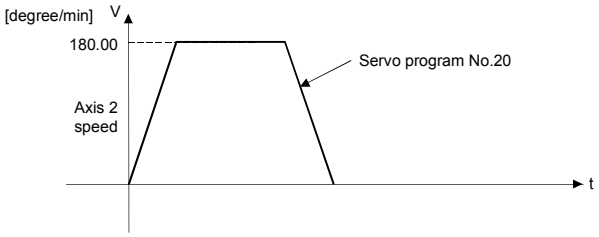

(3) 2 axes linear interpolation control program (Axis 1, Axis 2)

(a) Combined-speed specification

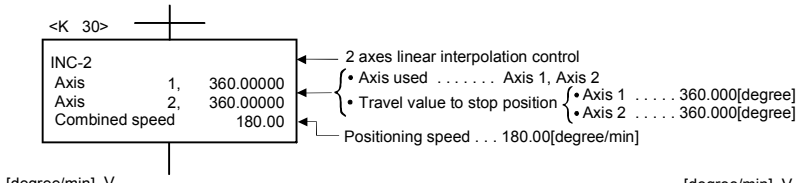

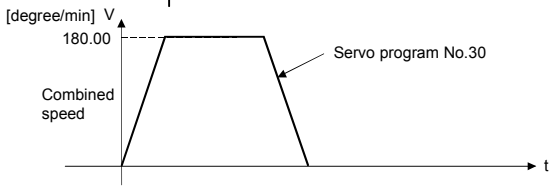

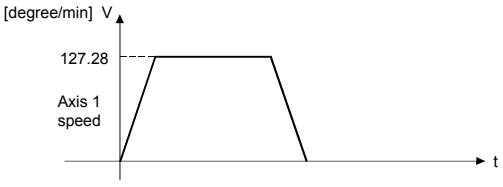

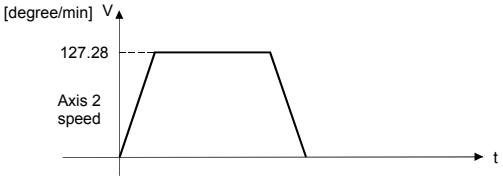

Example

(b) Long-axis reference specification

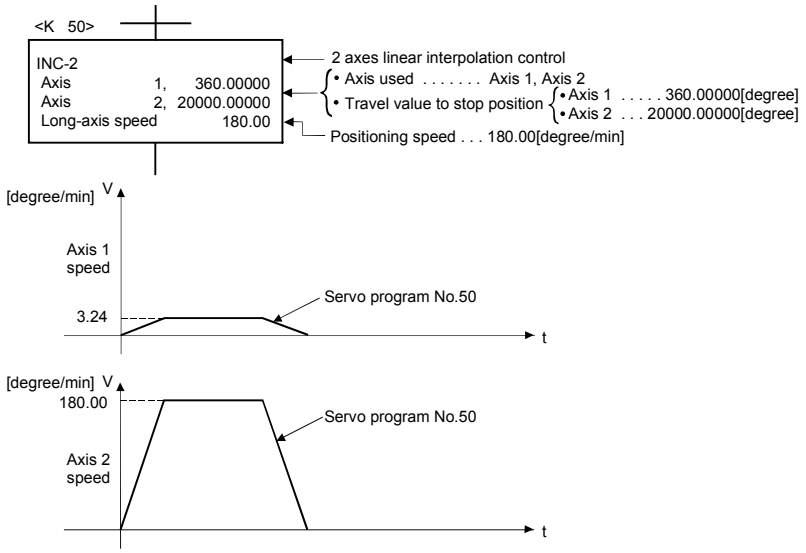

(c) Reference-axis speed setting

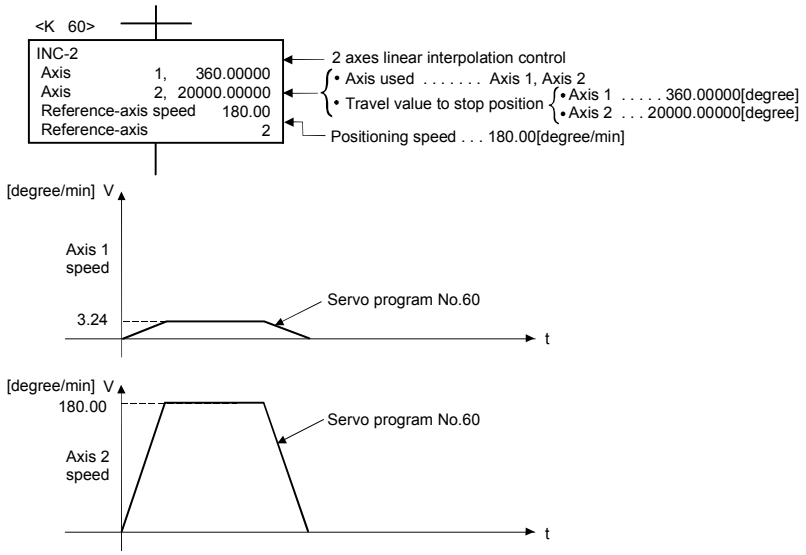

POINTS

When a speed change is executed by the Motion dedicated PLC instruction (S(P).CHGV) or servo program (CHGV instruction) after setting the "speed control 10 × multiplier setting for degree axis is valid", the positioning control is executed by the speed increased 10 × multiplier setting value.

4.3 Parameter Block

(1) The parameter blocks serve to make setting changes easy by allowing data such as the acceleration/deceleration control to be set for each positioning processing.

(2) A maximum 64 blocks can be set as parameter blocks.

(3) Parameter blocks can be set using a peripheral device.

(4) Parameter block to be set are shown in Table 4.2.

Table 4.2 Parameter Block Setting List

No.	Item	Setting range								Initial value	Units	Remarks	Section
		mm		inch		degree		PLS					
		Setting range	Units	Setting range	Units	Setting range	Units	Setting range	Units				
1	Interpolation control unit	0	—	1	—	2	—	3	—	3	—	• Set the units for compensation control. • It can be also used as the units for the command speed and allowable error range for circular interpolation set in the servo program.	6.1.4
2	Speed limit value	0.01 to 6000000.00	mm/min	0.001 to 600000.000	inch/min	0.001 to 2147483.647 (Note-1)	degree/min	1 to 2147483647	PLS/s	200000	PLS/s	• Set the maximum speed for positioning/home position return. • If the positioning speed or home position return speed setting exceeds the speed limit value, control is executed at the speed limit value.	4.3.1
3	Acceleration time	1 to 65535[ms]								1000	ms	• Set the time taken to reach the speed limit value from the start of motion.	
4	Deceleration time	1 to 65535[ms]								1000	ms	• Set the time taken to stop from the speed limit value.	
5	Rapid stop deceleration time	1 to 65535[ms]								1000	ms	• Set the time taken to stop from the speed limit value when a rapid stop is executed.	
6	S-curve ratio	0 to 100[%]								0	%	• Set the S-curve ratio for S-pattern processing. • When the S-curve ratio is 0[%], trapezoidal acceleration/deceleration processing is executed.	4.3.2
7	Torque limit value	1 to 1000[%]								300	%	• Set the torque limit value in the servo program.	—
8	Deceleration processing on STOP input	0 : Deceleration stop is executed based on the deceleration time. 1 : Deceleration stop is executed based on the rapid stop deceleration time.								0	—	• Set the deceleration processing when external signals (STOP, FLS, RLS) are input.	—
9	Allowable error range for circular interpolation	0 to 10000.0	μm	0 to 1.00000	inch	0 to 1.00000	degree	0 to 100000	PLS	100	PLS	• Set the permissible range for the locus of the arc and the set end point coordinates.	4.3.3

(Note-1): When the "speed control 10×multiplier setting for degree axis" is set to "valid", the setting range is 0.01 to 21474836.47[degree/min].
However, setting range of 0.001 to 2147483.647[degree/min] is displayed in the parameter block setting screen of programming software.

POINTS

(1) Parameter blocks are specified in the home position return data, JOG operation data or servo program.

(2) The various parameter block data can be changed using the servo program. (Refer to Section 5.3.)

POINTS

The data set in the parameter block is used in the positioning control, home position return and JOG operation.

(1) The parameter block No. used in the positioning control is set using a peripheral device at the creating of the servo program. If it is not set, control is executed with the contents of parameter block No.1.

Also, it is possible to set parameter block data individually in the servo program.

[Servo program creation screen]

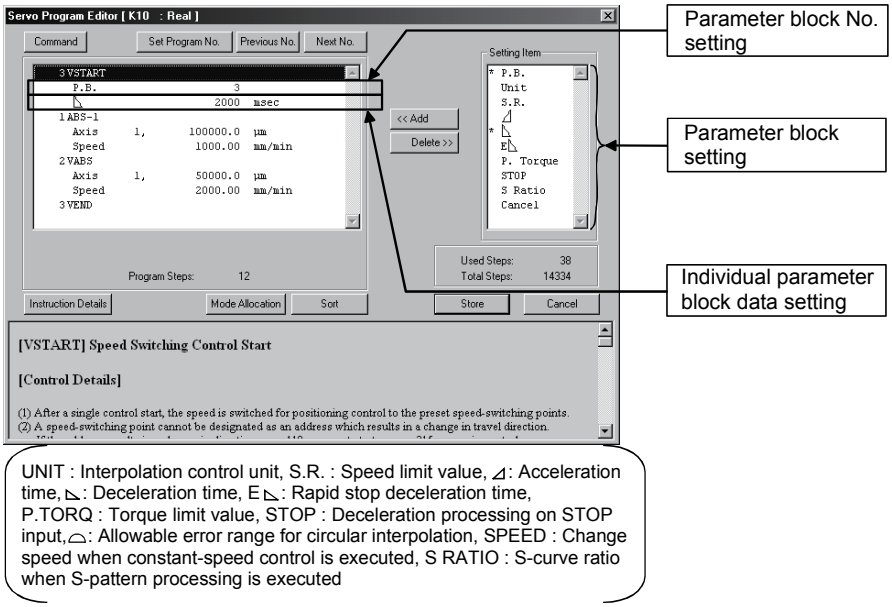

UNIT : Interpolation control unit, S.R. : Speed limit value, ⊿: Acceleration time, ⊾: Deceleration time, E⊾: Rapid stop deceleration time, P.TORQ : Torque limit value, STOP : Deceleration processing on STOP input, ⌓: Allowable error range for circular interpolation, SPEED : Change speed when constant-speed control is executed, S RATIO : S-curve ratio when S-pattern processing is executed

(2) The parameter block No. used in the home position return or JOG operation is set at the setting of the "home position return data" or "JOG operation data" using a peripheral device.

Refer to Section "6.23.1 Home position return data" or "6.21.1 JOG operation data" for details.

[Home position return data setting screen]

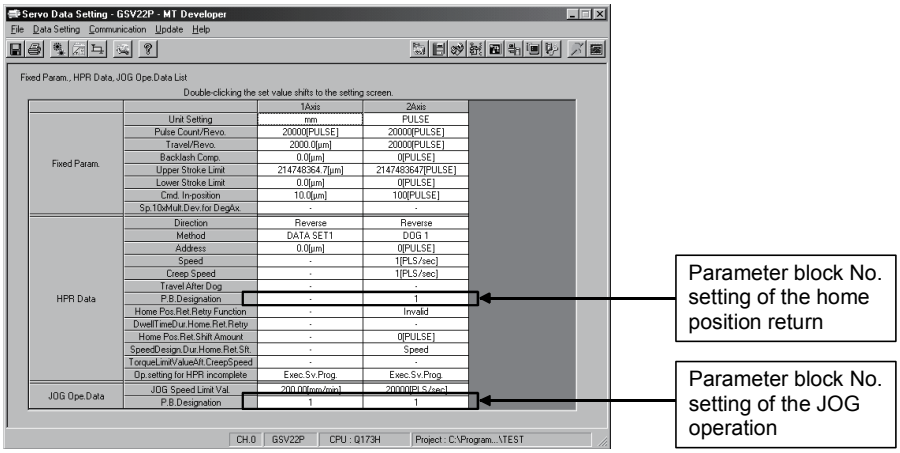

4.3.1 Relationships between the speed limit value, acceleration time, deceleration time and rapid stop deceleration time

The speed limit value is the maximum speed at the positioning/home position return.
The acceleration time is the time taken to reach the set speed limit value from the start of positioning.
The deceleration time and rapid stop deceleration time are the time taken to effect a stop from the set speed limit value.
Accordingly, the actual acceleration time, deceleration time, and rapid stop deceleration time are faster, because the positioning speed is faster than the speed limit value.

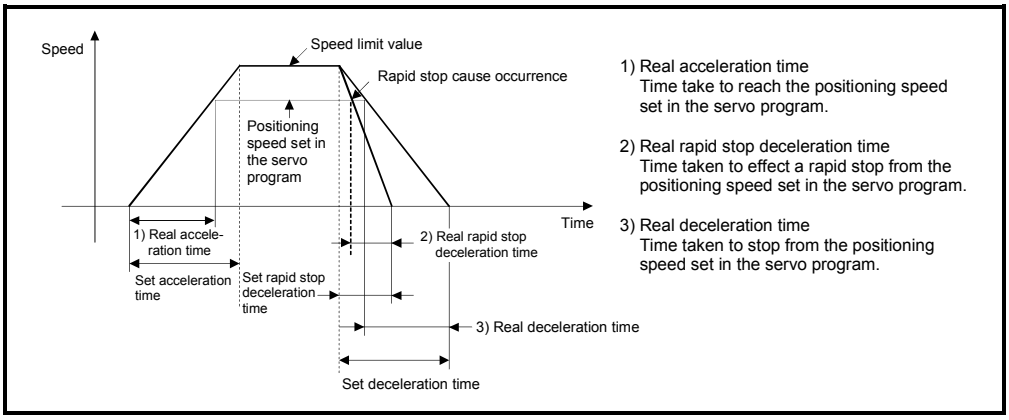

4.3.2 S-curve ratio

S-curve ratio can be set as the acceleration and deceleration processing method for S-pattern processing.
(Refer to Section 6.1.7 for details of S-curve acceleration/deceleration processing.)
Setting range of the S-curve ratio is 0 to 100[%].
If it is set outside the range, an error occurs at the start and control is executed with the S-curve ratio set as 100[%].
Errors are set in the error item information area (D9190).
Setting of the S-curve ratio enables acceleration/deceleration processing to be executed gently.
The graph for S-pattern processing is a sine curve as shown below.

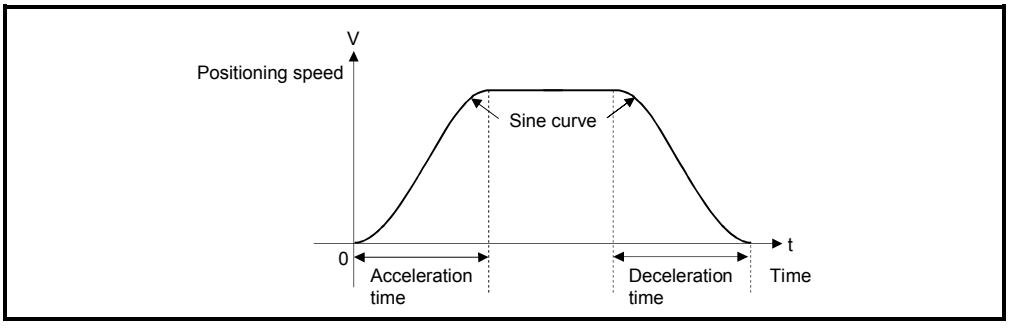

As shown below, the S-curve ratio setting serves to select the part of the sine curve to be used as the acceleration/deceleration curve.

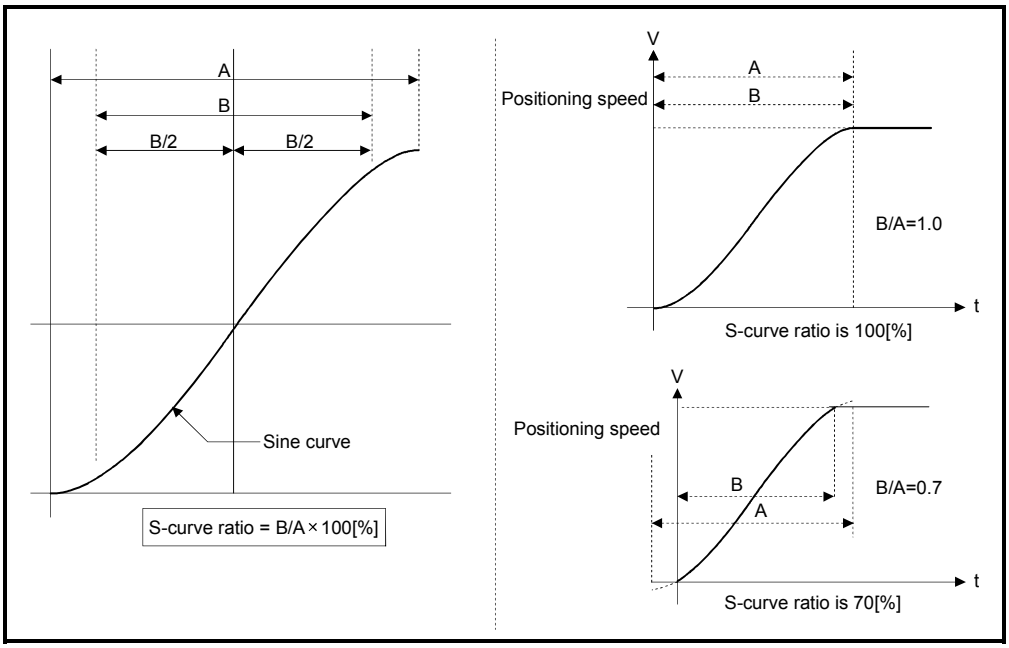

4.3.3 Allowable error range for circular interpolation

The locus of the arc calculated from the start point address and central point address may not coincide with the set end point address for the central-specified control.
The allowable error range for circular interpolation sets the allowable range for the error between the locus of the arc determined by calculation and the end point address.
If the error is within the allowable range, circular interpolation to the set end point address is executed while also executing error compensation by means of spiral interpolation.
If it exceeds the setting range, an error occurs at the start and positioning does not start. Such an error are set the applicable axis or minor error code area.

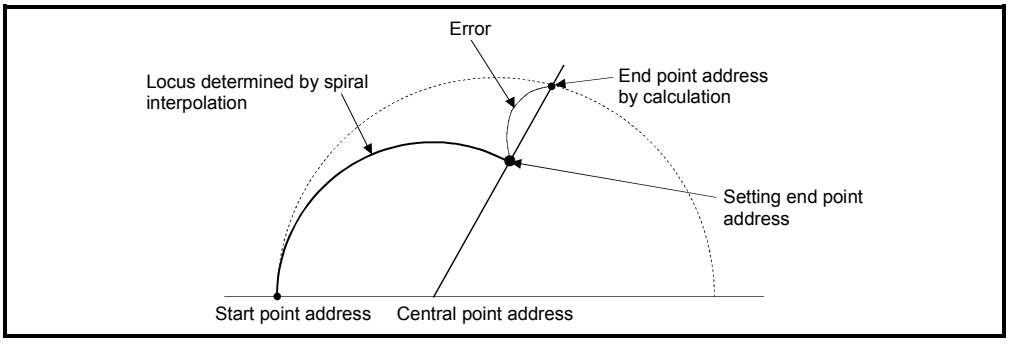

Fig. 4.4 Spiral Interpolation

5. SERVO PROGRAMS FOR POSITIONING CONTROL

Servo programs specify the type of the positioning data required to execute the positioning control in the Multiple CPU system.
This chapter describes the configuration and setting method of the servo programs.
Refer to Chapter "6 POSITIONING CONTROL" for details of the servo program.

5.1 Servo Program Composition Area

This section is described the composition of servo programs and the area in which stores the servo program.

5.1.1 Servo program composition

A servo program is composed a program No., servo instructions and positioning data.
When a program No. and the required servo instructions are specified using a peripheral device, the positioning data required to execute the specified servo instructions can be set.

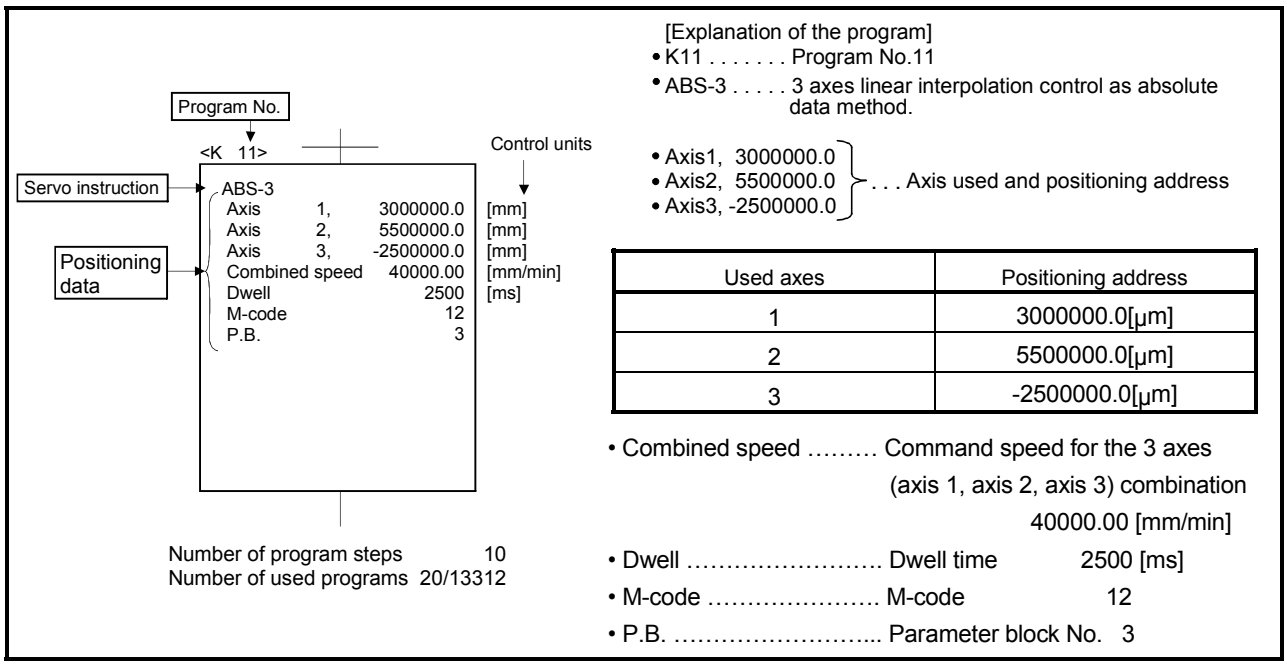

Used axes	Positioning address
1	3000000.0[μm]
2	5500000.0[μm]
3	-2500000.0[μm]

Fig. 5.1 Composition example of servo program

(1) Program No. ..... This No. is specified using the Motion SFC program.
Any No. in the range of 0 to 4095 can be set.

(2) Servo instruction …. Type of positioning control is indicated.
Refer to Section 5.2 for details.

(3) Positioning data ..... This is the data required to execute servo instructions.
The data required to execute is fixed for each servo instruction.
Refer to Section 5.3 for details.
The follows applies for the servo program shown in Figure 5.1:

- Axis used and positioning address
- Command speed

} Data which must be set in order to execute the servo instruction.

- Dwell time
- M-code

} Data which will be set to default values for control if not set.

- P.B. (parameter block)

} Control is executed using the data of parameter block 3 (P.B.3).

5.1.2 Servo program area

(1) Servo program area

This area is an internal memory of the Multiple CPU system which store the servo program created using a peripheral device.
This area is an internal RAM.

(2) Servo program capacity

The servo program area has a capacity of 14334 steps.

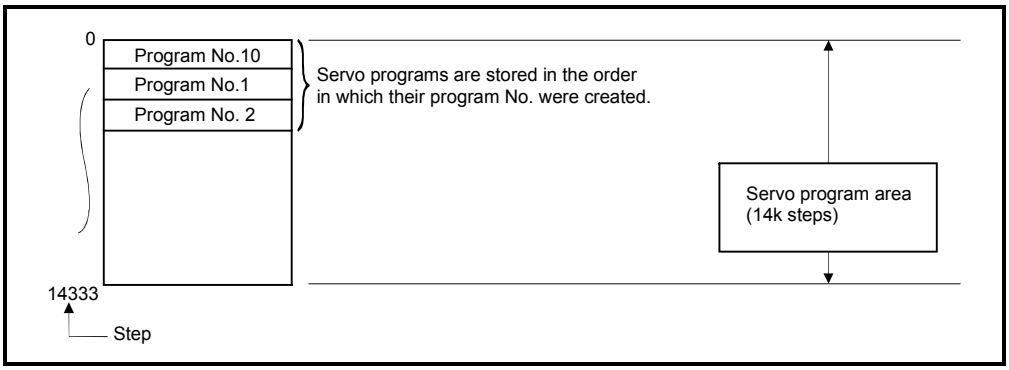

Fig. 5.2 Servo program area

POINT

If the servo program area has insufficient capacity, execute the multiple positioning control operations with one program by indirect setting of the positioning data used in the servo program. (Refer to Section 5.4.2 for details of indirect setting.)

5.2 Servo Instructions

The servo instructions used in the servo programs are shown below.

(1) Guide to servo instruction list

Table. 5.1 Guide to Servo Instruction List

Positioning control	Instruction symbol	Processing	Positioning data: Common: Parameter block No.	Axis	Address/travel	Command speed	Dwell time	M-code	Torque limit value	Circular: Auxiliary point	Radius	Central point	Pitch	OSC: Starting angle	Amplitude	Frequency	*1 Reference axis No.	Parameter block: Control unit	Speed limit value	Acceleration time	Deceleration time	Rapid stop deceleration time	Torque limit value	Deceleration processing at stop input	Allowable error range for circular interpolation	S-curve ratio	Other: Repeat condition	Program No.	Command speed (constant speed)	Cancel	Skip	FIN acceleration/deceleration	WAIT-ON/OFF	Fixed position stop acceleration /deceleration time	Fixed position stop	Number of steps
		Virtual enable	○	○	○	○	○	○	—	○	○	○	○	—	—	—	○	—	○	○	○	○	—	—	○	○	○	○	○	○	○	○	○	—	—	
		Number of step	1	1	1	1	1	1	1	1	1	1	1	1	1	1	1	1	2	1	1	1	1	1	1	1	1	2	2	2	1	2	1	1	
		Number of indirect words	1	—	2	2	1	1	1	2	2	2	1	2	2	2	1	1	2	1	1	1	1	1	2	1	1/1(B)	—	2	2(B)	2(B)	1	2(B)	1	2(B)	
1 axis	ABS-1	Absolute 1-axis positioning	△	○	○	○	△	△											△	△	△	△	△	△		△				△						4 to 17
1 axis	INC-1	Incremental 1-axis positioning	△	○	○	○	△	△											△	△	△	△	△	△		△				△						
2 axes	ABS-2	Absolute 2-axes linear															○	△	△	△	△	△	△	△		△				△						

1) 2) 3) 4) 5) 6) 7) 8)

Number	Description	
1)	Instruction symbol	Gives the servo instructions usable in servo programs.
	Processing	Gives the processing outlines of the servo instructions.
2)	(a) Indicates positioning data which can be set in servo instructions. 1) ○: Item which must be set (Data which cannot execute the servo instruction unless it sets.) 2) △: Item which is set when required (Data which will be controlled by the default value unless it sets.)	
	(b) Allows direct or indirect designation (except axis No.) 1) Direct designation : Set with numerical value. 2) Indirect designation : Set with word device (D, W, #). • Servo program execution is controlled using the preset word device contents. • Each setting item may either be 1 or 2 word data. • For 2 word data, set the first device No..	
	(c) Number of steps As there are more setting items, there are more number of instruction steps. (The number of steps is displayed when a servo program is created.) (The instruction + ○ item comprise the minimum steps, and one △ item increases the number of steps by 1.)	
3)	Items common to the servo instructions	
4)	Items set in circular interpolation starting servo programs	
5)	Items set for high-speed oscillation	
6)	Set when changing the parameter block (default value when not set) data set in the servo program to control. (The parameter block data are not changed.)	
7)	Setting items other than the common, circular and parameter block items (Items to be set vary with the servo instruction.)	
8)	Indicates the number of steps of each servo instruction.	

(2) Servo instruction list

The servo instructions that can be used in servo programs and the positioning data set in the servo instruction are shown in Table 5.2. Refer to Section 5.3 for details of the positioning data set in the servo instructions.

Table 5.2 Servo instruction list

Positioning control		Instruction symbol	Processing	Positioning data										
				Common							Circular			
				Parameter block No.	Axis	Address/travel value	Command speed	Dwell time	M -code	Torque limit value	Auxiliary point	Radius	Central point	Pitch
			Virtual enable	○	○	○	○	○	○	—	○	○	○	○
			Number of steps	1	1	1	1	1	1	1	1	1	1	1
			Number of indirect words	1	—	2	2	1	1	1	2	2	2	1
Linear interpolation control	1 axis	ABS-1	Absolute 1-axis positioning	△	○	○	○	△	△					
		INC-1	Incremental 1-axis positioning	△	○	○	○	△	△					
	2 axes	ABS-2	Absolute 2-axes linear interpolation	△	○	○	○	△	△					
		INC-2	Incremental 2-sxes linear interpolation	△	○	○	○	△	△					
	3 axes	ABS-3	Absolute 3-axes linear interpolation	△	○	○	○	△	△					
		INC-3	Incremental 3-axes linear interpolation	△	○	○	○	△	△					
	4 axes	ABS-4	Absolute 4-axes linear interpolation	△	○	○	○	△	△					
		INC-4	Incremental 4-axes linear interpolation	△	○	○	○	△	△					
Circular interpolation control	Auxiliary point-specified	ABS	Absolute auxiliary point-specified circular interpolation	△	○	○	○	△	△		○			
		INC	Incremental auxiliary point-specified circular interpolation	△	○	○	○	△	△		○			
	Radius-specified	ABS	Absolute radius-specified circular interpolation less than CW 180°	△	○	○	○	△	△			○		
		ABS	Absolute radius-specified circular interpolation CW 180° or more	△	○	○	○	△	△			○		
		ABS	Absolute radius-specified circular interpolation less than CCW 180°	△	○	○	○	△	△			○		
		ABS	Absolute radius-specified circular interpolation CCW 180° or more	△	○	○	○	△	△			○		
		INC	Incremental radius-specified circular interpolation less than CW 180°	△	○	○	○	△	△			○		
		INC	Incremental radius-specified circular interpolation CW 180° or more	△	○	○	○	△	△			○		
		INC	Incremental radius-specified circular interpolation less than CCW 180°	△	○	○	○	△	△			○		
		INC	Incremental radius-specified circular interpolation CCW 180° or more	△	○	○	○	△	△			○		

Positioning data																						
OSC			*1	Parameter block									Others									Number of steps
Starting angle	Amplitude	Frequency	Reference axis No.	Control unit	Speed limit value	Acceleration time	Deceleration time	Rapid stop deceleration time	Torque limit value	Deceleration processing at stop input	Allowable error range for circular interpolation	S-curve ratio	Repeat condition	Program No.	Command speed (constant speed)	Cancel	Skip	FIN acceleration/deceleration	WAIT-ON/OFF	Fixed position stop acceleration /deceleration time	Fixed position stop	
—	—	—	○	—	○	○	○	○	—	—	○	○	○	○	○	○	○	○	○	—	—	
1	1	1	1	1	2	1	1	1	1	1	1	1	1	1	2	2	2	1	2	1	1	
2	2	2	1	1	2	1	1	1	1	1	2	1	*2 1/ 1(B)	—	2	*2 1(B)	*2 1(B)	1	*2 1(B)	1	*2 1(B)	
					△	△	△	△	△	△		△				△						4 to 17
					△	△	△	△	△	△		△				△						
			○	△	△	△	△	△	△	△		△				△						5 to 20
			○	△	△	△	△	△	△	△		△				△						
			○	△	△	△	△	△	△	△		△				△						7 to 21
			○	△	△	△	△	△	△	△		△				△						
			○	△	△	△	△	△	△	△		△				△						8 to 22
			○	△	△	△	△	△	△	△		△				△						
				△	△	△	△	△	△	△	△	△				△						7 to 22
				△	△	△	△	△	△	△	△	△				△						
				△	△	△	△	△	△	△	△	△				△						6 to 21
				△	△	△	△	△	△	△	△	△				△						
				△	△	△	△	△	△	△	△	△				△						
				△	△	△	△	△	△	△	△	△				△						
				△	△	△	△	△	△	△	△	△				△						
				△	△	△	△	△	△	△	△	△				△						
				△	△	△	△	△	△	△	△	△				△						

○ : Must be set. △ : Set if required.
*1 : Only reference axis speed specification.
*2 : (B) indicates a bit device.

Table 5.2 Servo Instruction List (continued)

Positioning control		Instruction symbol	Processing	Positioning data										
				Common							Circular			
				Parameter block No.	Axis	Address/travel value	Command speed	Dwell time	M-code	Torque limit value	Auxiliary point	Radius	Central point	Pitch
			Virtual enable	○	○	○	○	○	○	—	○	○	○	○
			Number of steps	1	1	1	1	1	1	1	1	1	1	1
			Number of indirect words	1	—	2	2	1	1	1	2	2	2	1
Circular interpolation control	Central point-specified	ABS CW	Absolute central point-specified circular interpolation CW	△	○	○	○	△	△				○	
		ABS CCW	Absolute central point-specified circular interpolation CCW	△	○	○	○	△	△				○	
		INC CW	Incremental central point-specified circular interpolation CW	△	○	○	○	△	△				○	
		INC CCW	Incremental central point-specified circular interpolation CCW	△	○	○	○	△	△				○	
Helical interpolation control	Auxiliary point-specified	ABH	Absolute auxiliary point- specified helical interpolation	△	○	○	○	△	△		○			○
		INH	Incremental auxiliary point- specified helical interpolation	△	○	○	○	△	△		○			○
	Radius-specified	ABH	Absolute radius-specified helical interpolation less than CW 180°	△	○	○	○	△	△			○		○
		ABH	Absolute radius-specified helical interpolation CW 180° or more	△	○	○	○	△	△			○		○
		ABH	Absolute radius-specified helical interpolation less than CCW 180°	△	○	○	○	△	△			○		○
		ABH	Absolute radius-specified helical interpolation CCW 180° or more	△	○	○	○	△	△			○		○
		INH	Incremental radius-specified helical interpolation less than CW 180°	△	○	○	○	△	△			○		○
		INH	Incremental radius-specified helical interpolation CW 180° or more	△	○	○	○	△	△			○		○
		INH	Incremental radius-specified helical interpolation less than CCW 180°	△	○	○	○	△	△			○		○
		INH	Incremental radius-specified helical interpolation CCW 180° or more	△	○	○	○	△	△			○		○
	Central point-specified	ABH	Absolute central point-specified helical interpolation CW	△	○	○	○	△	△				○	○
		ABH	Absolute central point-specified helical interpolation CCW	△	○	○	○	△	△				○	○
		INH	Incremental central point-specified helical interpolation CW	△	○	○	○	△	△				○	○
		INH	Incremental central point-specified helical interpolation CCW	△	○	○	○	△	△				○	○

Positioning data																						Number of steps
OSC			*1	Parameter block									Others									
Starting angle	Amplitude	Frequency	Reference axis No.	Control unit	Speed limit value	Acceleration time	Deceleration time	Rapid stop deceleration time	Torque limit value	Deceleration processing at stop input	Allowable error range for circular interpolation	S-curve ratio	Repeat condition	Program No.	Command speed (constant speed)	Cancel	Skip	FIN acceleration/deceleration	WAIT-ON/OFF	Fixed position stop acceleration /deceleration time	Fixed position stop	
—	—	—	○	—	○	○	○	○	—	—	○	○	○	○	○	○	○	○	○	—	—	
1	1	1	1	1	2	1	1	1	1	1	1	1	1	1	2	2	2	1	2	1	1	
2	2	2	1	1	2	1	1	1	1	1	2	1	*2 1/ 1(B)	—	2	*2 1(B)	*2 1(B)	1	*2 1(B)	1	*2 1(B)	
				△	△	△	△	△	△	△	△	△				△						7 to 22
				△	△	△	△	△	△	△	△	△				△						
				△	△	△	△	△	△	△	△	△				△						
				△	△	△	△	△	△	△	△	△				△						
				△	△	△	△	△	△	△		△				△						10 to 27
				△	△	△	△	△	△	△		△				△						
				△	△	△	△	△	△	△		△				△						9 to 26
				△	△	△	△	△	△	△		△				△						
				△	△	△	△	△	△	△		△				△						
				△	△	△	△	△	△	△		△				△						
				△	△	△	△	△	△	△		△				△						
				△	△	△	△	△	△	△		△				△						
				△	△	△	△	△	△	△		△				△						
				△	△	△	△	△	△	△		△				△						10 to 27
				△	△	△	△	△	△	△		△				△						
				△	△	△	△	△	△	△		△				△						

○ : Must be set. △ : Set if required.
*1 : Only reference axis speed specification.
*2 : (B) indicates a bit device.

Table 5.2 Servo Instruction List (continued)

Positioning control		Instruction symbol	Processing	Positioning data: Common: Parameter block No.	Common: Axis	Common: Address/travel value	Common: Command speed	Common: Dwell time	Common: M-code	Common: Torque limit value	Circular: Auxiliary point	Circular: Radius	Circular: Central point	Circular: Pitch
			Virtual enable	○	○	○	○	○	○	—	○	○	○	○
			Number of steps	1	1	1	1	1	1	1	1	1	1	1
			Number of indirect words	1	—	2	2	1	1	1	2	2	2	1
Fixed-pitch feed	1 axis	FEED-1	1-axis fixed-pitch feed start	△	○	○	○	△	△					
	2 axes	FEED-2	2-axes linear interpolation fixed-pitch feed start	△	○	○	○	△	△					
	3 axes	FEED-3	3-axes linear interpolation fixed-pitch feed start	△	○	○	○	△	△					
Speed control (Ⅰ)	Forward rotation	VF	Speed control (Ⅰ) forward rotation start	△	○		○		△					
	Reverse rotation	VR	Speed control (Ⅰ) reverse rotation start	△	○		○		△					
Speed control (Ⅱ)	Forward rotation	VVF	Speed control (Ⅱ) forward rotation start	△	○		○		△	△				
	Reverse rotation	VVR	Speed control (Ⅱ) reverse rotation start	△	○		○		△	△				
Speed-position control	Forward rotation	VPF	Speed-position control forward rotation start	△	○	○	○	△	△	△				
	Reverse rotation	VPR	Speed-position control reverse rotation start	△	○	○	○	△	△	△				
	Restart	VPSTART	Speed-position control restart		○									
Speed-switching control		VSTART	Speed-switching control start	△										
		VEND	Speed-switching control end											
		ABS-1	Speed-switching control end point address		○	○	○	△	△	△				
		ABS-2			○	○	○	△	△	△				
		ABS-3			○	○	○	△	△	△				
		INC-1	Travel value up to speed-switching control end point		○	○	○	△	△	△				
		INC-2			○	○	○	△	△	△				
		INC-3			○	○	○	△	△	△				
		VABS	Speed-switching point absolute specification			○	○		△	△				
		VINC	Speed-switching point incremental specification			○	○		△	△				

Positioning data																						Number of steps
OSC			*1	Parameter block									Others									
Starting angle	Amplitude	Frequency	Reference axis No.	Control unit	Speed limit value	Acceleration time	Deceleration time	Rapid stop deceleration time	Torque limit value	Deceleration processing at stop input	Allowable error range for circular interpolation	S-curve ratio	Repeat condition	Program No.	Command speed (constant speed)	Cancel	Skip	FIN acceleration/deceleration	WAIT-ON/OFF	Fixed position stop acceleration /deceleration time	Fixed position stop	
—	—	—	○	—	○	○	○	○	—	—	○	○	○	○	○	○	○	○	○	—	—	
1	1	1	1	1	2	1	1	1	1	1	1	1	1	1	2	2	2	1	2	1	1	
2	2	2	1	1	2	1	1	1	1	1	2	1	*2 1/ 1(B)	—	2	*2 1(B)	*2 1(B)	1	*2 1(B)	1	*2 1(B)	
					△	△	△	△	△	△		△				△						4 to 17
				△	△	△	△	△	△	△		△				△						5 to 19
				△	△	△	△	△	△	△		△				△						7 to 21
					△	△	△	△	△	△		△				△						3 to 15
					△	△	△	△	△	△		△				△						
					△	△	△	△	△	△		△				△						3 to 16
					△	△	△	△	△	△		△				△						
					△	△	△	△	△	△		△				△						4 to 18
					△	△	△	△	△	△		△				△						
																△						2 to 4
				△	△	△	△	△	△	△		△				△						1 to 13
																						1
																△						4 to 9
																△						5 to 10
																△						7 to 12
																△						4 to 9
																△						5 to 10
																△						7 to 12
																						4 to 6

○ : Must be set. △ : Set if required.
*1 : Only reference axis speed specification.
*2 : (B) indicates a bit device.

Table 5.2 Servo Instruction List (continued)

Positioning control	Instruction symbol	Processing	Positioning data: Common: Parameter block No.	Common: Axis	Common: Address/travel value	Common: Command speed	Common: Dwell time	Common: M-code	Common: Torque limit value	Circular: Auxiliary point	Circular: Radius	Circular: Central point	Circular: Pitch
		Virtual enable	○	○	○	○	○	○	—	○	○	○	○
		Number of steps	1	1	1	1	1	1	1	1	1	1	1
		Number of indirect words	1	—	2	2	1	1	1	2	2	2	1
Speed control with fixed position stop (Forward rotation)	PVF	Speed control with fixed position stop absolute specification	△	○	○	○	△	△					
Speed control with fixed position stop (Reverse rotation)	PVR		△	○	○	○	△	△					
Position follow-up control	PFSTART	Position follow-up control start	△	○	○	○		△					
Constant-speed control	CPSTART1	1-axis constant-speed control start	△	○		○							
	CPSTART2	2-axes constant-speed control start	△	○		○							
	CPSTART3	3-axes constant-speed control start	△	○		○							
	CPSTART4	4-axes constant-speed control start	△	○		○							
	ABS-1	Constant-speed control passing point absolute specification		○	○			△	△				
	ABS-2			○	○			△	△				
	ABS-3			○	○			△	△				
	ABS-4			○	○			△	△				
	ABS			○	○			△	△	○			
	ABS			○	○			△	△		○		
	ABS			○	○			△	△		○		
	ABS			○	○			△	△		○		
	ABS			○	○			△	△		○		
	ABS			○	○			△	△			○	
	ABS			○	○			△	△			○	
	ABH	Constant-speed control passing point helical absolute specification		○	○			△	△	○			○
	ABH			○	○			△	△		○		○
	ABH			○	○			△	△		○		○
	ABH			○	○			△	△		○		○
	ABH			○	○			△	△		○		○
	ABH			○	○			△	△			○	○
	ABH			○	○			△	△			○	○

Positioning data																						Number of steps
OSC			*1	Parameter block									Others									
Starting angle	Amplitude	Frequency	Reference axis No.	Control unit	Speed limit value	Acceleration time	Deceleration time	Rapid stop deceleration time	Torque limit value	Deceleration processing at stop input	Allowable error range for circular interpolation	S-curve ratio	Repeat condition	Program No.	Command speed (constant speed)	Cancel	Skip	FIN acceleration/deceleration	WAIT-ON/OFF	Fixed position stop acceleration /deceleration time	Fixed position stop	
—	—	—	○	—	○	○	○	○	—	—	○	○	○	○	○	○	○	○	○	—	—	
1	1	1	1	1	2	1	1	1	1	1	1	1	1	1	2	2	2	1	2	1	1	
2	2	2	1	1	2	1	1	1	1	1	2	1	*2 1/ 1(B)	—	2	*2 1(B)	*2 1(B)	1	*2 1(B)	1	*2 1(B)	
					△		△	△	△	△		△				△				○	○	6 to 19
					△		△	△	△	△		△				△				○	○	
					△	△	△	△	△	△		△				△						4 to 16
					△	△	△	△	△	△		△				△		△				3 to 15
				△	△	△	△	△	△	△	△	△				△		△				3 to 17
				△	△	△	△	△	△	△	△	△				△		△				4 to17
				△	△	△	△	△	△	△	△	△				△		△				
															△		△		△			2 to 10
															△		△		△			3 to 11
															△		△		△			4 to 12
															△		△		△			5 to 13
															△		△		△			5 to 14
															△		△		△			4 to 13
															△		△		△			
															△		△		△			
															△		△		△			
															△		△		△			5 to 14
															△		△		△			
															△		△		△			9 to 14
															△		△		△			8 to 13
															△		△		△			
															△		△		△			
															△		△		△			
															△		△		△			9 to 14

○ : Must be set. △ : Set if required.
*1 : Only reference axis speed specification.
*2 : (B) indicates a bit device.

Table 5.2 Servo Instruction List (continued)

Positioning control	Instruction symbol	Processing		Positioning data										
				Common							Circular			
				Parameter block No.	Axis	Address/travel value	Command speed	Dwell time	M-code	Torque limit value	Auxiliary point	Radius	Central point	Pitch
			Virtual enable	○	○	○	○	○	○	—	○	○	○	○
			Number of steps	1	1	1	1	1	1	1	1	1	1	1
			Number of indirect words	1	—	2	2	1	1	1	2	2	2	1
Constant-speed control	INC-1	Constant-speed control passing point incremental specification			○	○			△	△				
	INC-2				○	○			△	△				
	INC-3				○	○			△	△				
	INC-4				○	○			△	△				
	INC				○	○			△	△	○			
	INC				○	○			△	△		○		
	INC				○	○			△	△		○		
	INC				○	○			△	△		○		
	INC				○	○			△	△		○		
	INC				○	○			△	△			○	
	INC				○	○			△	△			○	
	INH	Constant-speed control passing point helical incremental specification			○	○			△	△	○			○
	INH				○	○			△	△		○		○
	INH				○	○			△	△		○		○
	INH				○	○			△	△		○		○
	INH				○	○			△	△		○		○
	INH				○	○			△	△			○	○
	INH				○	○			△	△			○	○
	CPEND	Constant-speed control end						△						

Positioning data																						
OSC			*1	Parameter block									Others									Number of steps
Starting angle	Amplitude	Frequency	Reference axis No.	Control unit	Speed limit value	Acceleration time	Deceleration time	Rapid stop deceleration time	Torque limit value	Deceleration processing at stop input	Allowable error range for circular interpolation	S-curve ratio	Repeat condition	Program No.	Command speed (constant speed)	Cancel	Skip	FIN acceleration/deceleration	WAIT-ON/OFF	Fixed position stop acceleration /deceleration time	Fixed position stop	
—	—	—	○	—	○	○	○	○	—	—	○	○	○	○	○	○	○	○	○	—	—	
1	1	1	1	1	2	1	1	1	1	1	1	1	1	1	2	2	2	1	2	1	1	
2	2	2	1	1	2	1	1	1	1	1	2	1	*2 1/ 1(B)	—	2	*2 1(B)	*2 1(B)	1	*2 1(B)	1	*2 1(B)	
															△		△		△			2 to 10
															△		△		△			3 to 11
															△		△		△			4 to 12
															△		△		△			5 to 13
															△		△		△			5 to 14
															△		△		△			4 to 13
															△		△		△			
															△		△		△			
															△		△		△			
															△		△		△			5 to 14
															△		△		△			
															△		△		△			9 to 14
															△		△		△			8 to 13
															△		△		△			
															△		△		△			
															△		△		△			
															△		△		△			9 to 14
															△		△		△			
																						1 to 2

○ : Must be set. △ : Set if required.
*1 : Only reference axis speed specification.
*2 : (B) indicates a bit device.

Table 5.2 Servo Instruction List (continued)

Positioning control	Instruction symbol	Processing	Positioning data: Common: Parameter block No.	Common: Axis	Common: Address/travel value	Common: Command speed	Common: Dwell time	Common: M-code	Common: Torque limit value	Circular: Auxiliary point	Circular: Radius	Circular: Central point	Circular: Pitch
		Virtual enable	○	○	○	○	○	○	—	○	○	○	○
		Number of steps	1	1	1	1	1	1	1	1	1	1	1
		Number of indirect words	1	—	2	2	1	1	1	2	2	2	1
Repetition of same control (used in speed switching control, constant-speed control)	FOR-TIMES	Repeat range start setting											
	FOR-ON												
	FOR-OFF												
	NEXT	Repeat range end setting											
Simultaneous start	START	Simultaneous start											
Home position return	ZERO	Home position return start		○									
High speed oscillation	OSC	High-speed oscillation	△	○				△					
Current Value change	CHGA	Servomotor/Virtual Servomotor Shaft Current Value Change		○	○								
	CHGA-E	Encoder current value change		○	○								
	CHGA-C	CAM shaft current value change		○	○								

Positioning data																						
OSC			*1	Parameter block									Others									Number of steps
Starting angle	Amplitude	Frequency	Reference axis No.	Control unit	Speed limit value	Acceleration time	Deceleration time	Rapid stop deceleration time	Torque limit value	Deceleration processing at stop input	Allowable error range for circular interpolation	S-curve ratio	Repeat condition	Program No.	Command speed (constant speed)	Cancel	Skip	FIN acceleration/deceleration	WAIT-ON/OFF	Fixed position stop acceleration /deceleration time	Fixed position stop	
—	—	—	○	—	○	○	○	○	—	—	○	○	○	○	○	○	○	○	○	—	—	
1	1	1	1	1	2	1	1	1	1	1	1	1	1	1	2	2	2	1	2	1	1	
2	2	2	1	1	2	1	1	1	1	1	2	1	*2 1/ 1(B)	—	2	*2 1(B)	*2 1(B)	1	*2 1(B)	1	*2 1(B)	
													○									2
													○									
													○									
																						3
														○								2 to 3
																						2
○	○	○							△							△						5 to 10
																						3

○ : Must be set. △ : Set if required.
*1 : Only reference axis speed specification.
*2 : (B) indicates a bit device.

5.3 Positioning Data

The positioning data set in the servo programs is shown in Table 5.3.

Table 5.3 Positioning data

Name				Explanation	Default value	Setting value using a peripheral device			
						Setting range			
						mm	inch	degree	PLS
Common Settings	Parameter block No.			• Set based on which parameter block deceleration processing at the acceieration/ deceleration processing and STOP input.	1	1 to 64			
	Axis			• Set the starting axis. • It becomes the interpolation starting axis No. at the interpolation.	—	1 to 32			
	Address/travel value	Absolute data method	Address	Set the positioning address as an absolute method with an absolute address.	—	-214748364.8 to 214748364.7 [μm]	-21474.83648 to 21474.83647	0 to 359.99999	-2147483648 to 2147483647
		Incremental data method	Travel value	Set the positioning address as an incremental data method with a travel value. Travel direction is indicated by the sign. Only positive settings can be made at the speed/position control. Positive : Forward rotation (address increase direction) Negative: Reverse rotation (address decrease direction)	—	Expect for the speed/position switching control 0 to ±2147483647 Speed/position switching control 0 to 214748364.7 [μm]	0 to 21474.83647	0 to 21474.83647	0 to 2147483647
	Command speed			• Sets the positioning speed. • Units for speed are the "control units" set in the parameter block. • It becomes the combined-speed/long-axis reference speed/reference axis speed at the interpolation starting. (PTP control only)	—	0.01 to 6000000.00 [mm/min]	0.001 to 600000.000 [inch/min]	0.001 to 2147483.647 [degree/min] (Note-5)	1 to 2147483647 [PLS/s]
	Dwell time			• Set the time until outputs the positioning complete signal (M2401+20n) after positioning to positioning address.	0[ms]	0 to 5000[ms]			
	M-code			• Set the M-code. • Set for each point at the speed-switching control and constant-speed control. • Updated it at the start or specified point.	0	0 to 32767			
	Torque limit value			• Set the torque limit value. • The torque limit is perfomed based on the parameter block data at the start. The speed-switching control can be set for each point and the setting torque limit values can be performed with the specified point.	Torque limit setting valued [%] in the parameter block	1 to 1000[%]			

	Setting value using the Motion SFC program (Indirect setting)				Indirect setting		Processing at the setting error		
	Setting range				Possible/ not possible	Number of used words	Error item data (Note-4) (Stored in D9190)	Control using default value	Not start
	mm	inch	degree	PLS					
	1 to 64				○	1	1	○	
	—				×	—	—		○
	-2147483648 to 2147483647 (× 10^{-1}[μm])	-2147483648 to 214748647 (× 10^{-5}[inch])	0 to 35999999 (× 10^{-5}[degree])	-2147483648 to 2147483647	○	2	n03 (Note-1)		
	Except for the speed/position switching control 0 to ±214783647								
	Speed/position switching control								
	0 to 2147483647 (× 10^{-1}[μm])	0 to 2147483647 (× 10^{-5}[inch])	0 to 2147483647 (× 10^{-5}[degree])	0 to 2147483647			—		
	1 to 600000000 (× 10^{-2} [mm/min])	1 to 600000000 (× 10^{-3} [inch/min])	1 to 2147483647 (× 10^{-3} [degree/min]) (Note-5)	1 to 2147483647 [PLS/s]	○	2	4	○ (Note-2)	○ (Note-3)
	0 to 5000[ms]				○	1	5	○	
	0 to 32767				○	1	6	○	
	1 to 1000[%]				○	1	7	○	

REMARK

(Note-1): The "n" in n03, n08, n09 and n10, indicates the axis No. (1 to 32).
(Note-2): When an error occurs because the speed limit value is exceeded, it is controlled at the speed limit value.
(Note-3): Applies when the command speed is "0".
(Note-4): If there are multiple errors in the same program, the latest error item data is stored.
(Note-5): When the "speed control 10 × multiplier setting for degree axis" is set to "valid", the setting range is 0.01 to 21474836.47 [degree/min].

Table 5.3 Positioning data (Continued)

Name			Explanation	Setting value using a peripheral device				
				Default value	Setting range			
					mm	inch	degree	PLS
Circular Interpolation	Auxiliary point	Absolute data method	• Set at the auxiliary point-specified circular interpolation.	—	-214748364.8 to 214748364.7 [μm]	-21474.83648 to 21474.83647	0 to 359.99999	-2147483648 to 2147483647
		Incremental data method			0 to ±2147483647			
	Radius	Absolute data method	• Set at the radius-specified circular interpolation. • The sitting ranges depending on the positioning nethod is shown to the right.	—	0.1 to 429496729.5 [μm]	0.00001 to 42949.67295	0 to 359.99999	1 to 4294967295
		Incremental data method			0.1 to 214748364.7 [μm]	0.00001 to 21474.83647	0.00001 to 21474.83647	1 to 2147483647
	Central point	Absolute data method	• Set at the central point-specified circular interpolation.	—	-214748364.8 to 214748364.7 [μm]	-21474.83648 to 21474.83647	0 to 359.99999	-2147483648 to 2147483647
		Incremental data method			0 to ±2147483647			
	Number of pitches		• Set at the helical interpolation.	—	0 to 999			
Parameter block	Control unit		• It can be set only items to be changed of the specified parameter block data. • Refer to Section 4.3 "Parameter Block" for details of each data.	3	0	1	2	3
	Speed limit value			200000 [PLS/s]	0.01 to 6000000.00 [mm/min]	0.001 to 600000.000 [inch/min]	0.001 to 2147483.647 [degree/min] (Note-5)	1 to 2147483647 [PLS/s]
	Acceleration time			1000[ms]	1 to 65535[ms]			
	Deceleration time			1000[ms]	1 to 65535[ms]			
	Rapid stop deceleration time			1000[ms]	1 to 65535[ms]			
	S-curve ratio			0[%]	0 to 100[%]			
	Torque limit value			300[%]	1 to 1000[%]			
	Deceleration processing on STOP input			0	0: Deceleration stop based on the deceleration time 1: Deceleration stop based on the rapid stop deceleration time			
	Allowable error range for circular interpolation			100[PLS]	0 to 10000.0 [μm]	0 to 1.00000	0 to 1.00000	0 to 100000

	Setting value using the Motion SFC program (Indirect setting)				Indirect setting		Processing at the setting error		
	Setting range				Possible/ not possible	Number of used words	Error item data (Note-4) (Stored in D9190)	Control using default value	Not start
	mm	inch	degree	PLS					
	-2147483648 to 2147483647 ($\times 10^{-1}$[μm])	-2147483648 to 2147483647 ($\times 10^{-5}$[inch])	0 to 35999999 ($\times 10^{-5}$[degree])	-2147483648 to 2147483647	○	2 × 2	n08 (Note-1)		
	0 to ±2147483647								
	1 to 4294967295 ($\times 10^{-1}$[μm])	1 to 4294967295 ($\times 10^{-5}$[inch])	0 to 35999999 ($\times 10^{-5}$[degree])	1 to 4294967295	○	2	n09 (Note-1)		○
	1 to 2147483647 ($\times 10^{-1}$[μm])	1 to 2147483647 ($\times 10^{-5}$[inch])	1 to 2147483647 ($\times 10^{-5}$[degree])	1 to 2147483647	○				
	-2147483648 to 2147483647 ($\times 10^{-1}$[μm])	-2147483648 to 2147483647 ($\times 10^{-5}$[inch])	0 to 35999999 ($\times 10^{-5}$[degree])	-2147483648 to 2147483647	○	2 × 2	n10 (Note-1)		
	0 to ±2147483647				○				
	0 to 999				○	1	28		
	0	1	2	3	○	1	11	○	
	1 to 600000000 ($\times 10^{-2}$ [mm/min])	1 to 600000000 ($\times 10^{-3}$ [inch/min])	1 to 2147483647 ($\times 10^{-3}$ [degree/min]) (Note-5)	1 to 2147483647 [PLS/s]	○	2	12		
	1 to 65535[ms]				○	1	13		
	1 to 65535[ms]				○	1	14		
	1 to 65535[ms]				○	1	15		
	0 to 100[%]				○	1	21		
	1 to 1000[%]				○	1	16		
	0: Deceleration to a stop in accordance with the deceleration time 1: Deceleration to a stop in accordance with the rapid stop deceleration time				○	1	–		
	1 to 100000 ($\times 10^{-1}$[μm])	1 to 100000 ($\times 10^{-5}$[inch])	1 to 100000 ($\times 10^{-5}$[degree])	1 to 100000 [PLS]	○	2	17		

REMARK

(Note-1): The "n" in n03, n08, n09 and n10, indicates the axis No. (1 to 32).

(Note-4): If there are multiple errors in the same program, the latest error item data is stored.

(Note-5): When the "speed control 10 × multiplier setting for degree axis is set to "valid", is 0.01 to 21474836.47 [degree/min].

Table 5.3 Positioning data (Continued)

	Name	Explanation	Setting value using a peripheral device					
			Default value	Setting range				
				mm	inch	degree	PLS	
Others	Repeat condition (Number of repetitions)	Set the repeat conditions between FOR-TIMES instruction and NEXT instruction.	—	1 to 32767				
	Repeat condition (ON/OFF)	Set the repeat conditions between FOR-ON/OFF instruction and NEXT instruction.	—	X, Y, M, B, F				
	Program No.	Set the program No. for simultaneous start.	—	0 to 4095				
	Command speed (constant-speed)	Set the speed for points on the way in the servo program.	—	0.01 to 6000000.00 [mm/min]	0.001 to 600000.000 [inch/min]	0.001 to 2147483.647 [degree/min] (Note-5)	1 to 2147483647 [PLS/s]	
	Cancel	Set to stop execution of a servo program by deceleration stop by turning on the specified bit device in the servo program.	—	X, Y, M, B, F				
	Skip	Set to cancel positioning to pass point and execute the positioning to the next point by turning on the specified bit device during positioning at each pass point for constant-speed control instruction.	—	X, Y, M, B, F				
	FIN acceleration/ deceleration	Set to execute positioning to each pass point for constant-speed control instruction by turning on the FIN signal.	—	1 to 5000[ms]				
	WAIT-ON/OFF	Set to make state of the wating for execution by constnt-speed control and execute the positioning immediately by turning on/off the command bit device.	—	X, Y, M, B, F				
	Fixed position stop acceleration/ deceleration time	Acceleration/deceleration time used in the starting of speed control with fixed position stop, speed change request (CHGV) or fixed position stop command ON.	—	1 to 65535[ms]				
	Fixed position stop	Command bit device of fixed position stop is set.	—	X, Y, M, B, F				

	Setting value using the Motion SFC program (Indirect setting)				Indirect setting		Processing at the setting error		
	Setting range				Possible/ not possible	Number of used words	Error item data (Note-4) (Stored in D9190)	Control using default value	Not start
	mm	inch	degree	PLS					
	1 to 32767				○	1	18	Control by K1	
	–				–	–	–		
	0 to 4095				○	1	19		○
	1 to 600000000 ($\times 10^{-2}$ [mm/min])	1 to 600000000 ($\times 10^{-3}$ [inch/min])	1 to 2147483647 ($\times 10^{-3}$ [degree/min]) (Note-5)	1 to 2147483647 [PLS/s]	○	2	4	○ (Note-2)	○ (Note-3)
	–				–	–	–		
	–				–	–	–		
	1 to 5000[ms]				○	1	13	Control by 1000[ms]	
	–				–	–	–		
	1 to 65535[ms]				○	1	13	Control by 1000[ms]	
	–				–	–	–		

REMARK

(Note-2): When an error occurs because the speed limit value is exceeded, it is controlled at the speed limit value.

(Note-3): Applies when the command speed is "0".

(Note-4): If there are multiple errors in the same program, the latest error item data is stored.

(Note-5): When the "speed control 10 × multiplier setting for degree axis is set to "valid", is 0.01 to 21474836.47 [degree/min].

5.4 Setting Method for Positioning Data

This section describes how to set the positioning data used in the servo program.
There are two ways to set positioning data, as follows:

(1) Setting by specifying numerical values … Refer to Section 5.4.1

(2) Indirect setting by word devices …… Refer to Section 5.4.2

"Setting by specifying numerical values" and "indirect setting by word devices" can be used together in one servo program.

5.4.1 Setting method by specifying numerical values

In the setting method by specifying numerical values, each positioning data is set by a numerical value, and it becomes fixed data.
Data can be set and corrected using a peripheral device only.

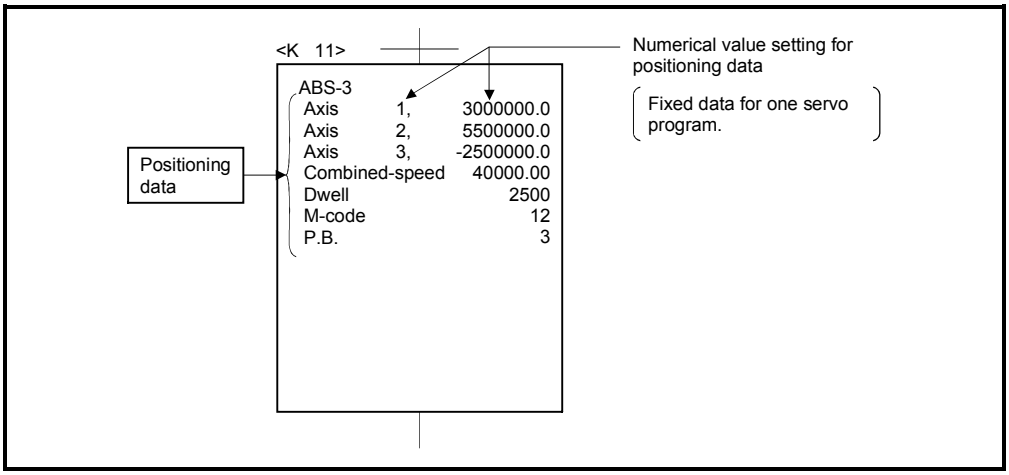

Fig. 5.3 Setting example of positioning data by specifying numerical value

5.4.2 Indirect setting method by word devices (D, W and #)

In the indirect setting method (Note-1) by word devices, the word device (D, W and #) No. is specified to the positioning data specified with the servo program.
By using the contents (data) of specified word device using the Motion SFC program (Automatic refresh, etc.), multiple positioning controls can be executed in one servo program.
The word device used in the indirect setting is the device of the Motion CPU but the device of the PLC CPU.
The device memory composition of the Motion CPU and PLC CPU is shown below.

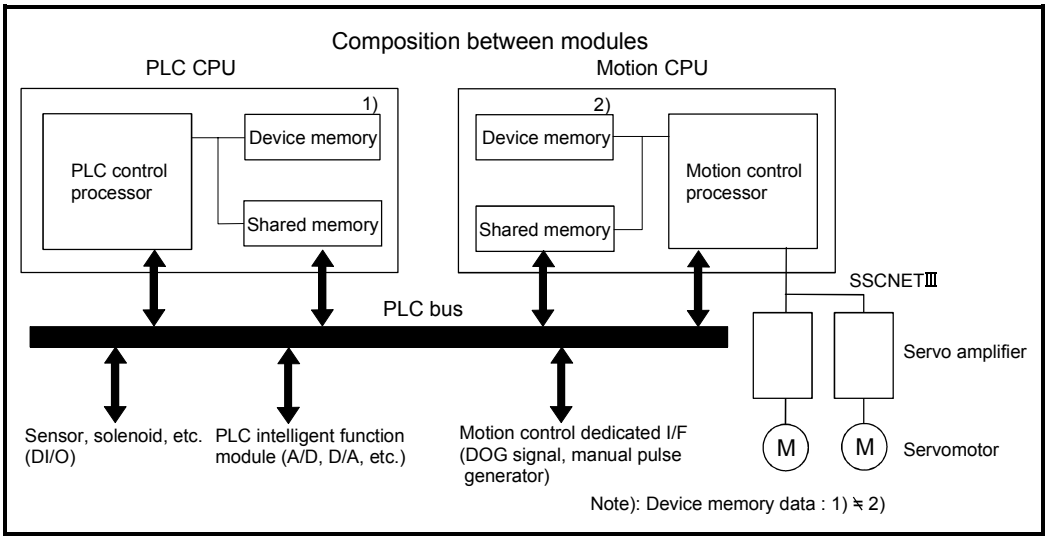

(Note-1): Device memory in the Motion CPU.

(1) Devices for indirect setting data

The devices for indirect setting data are data registers (D), link registers (W) and motion registers (#). (Word devices except the data registers, link registers and motion registers cannot be used.)

The usable data registers are shown in the table below.

Word device	Usable devices
D	800 to 8191
W	0 to 1FFF
#	0 to 7999

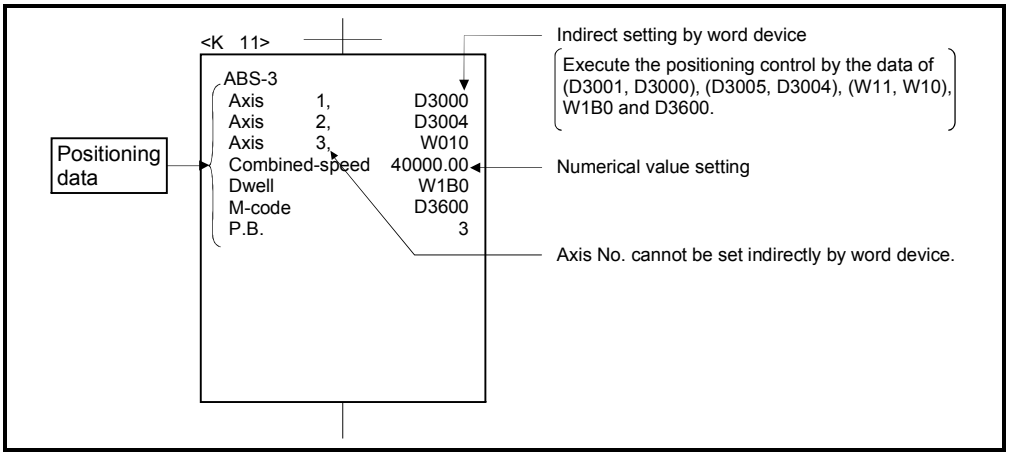

Fig. 5.4 Example of setting positioning data by numerical value setting

(2) Inputting of positioning data

In indirect setting by word devices, the word device data is inputted when the servo program is executed using the Motion CPU.

It must be executed the start request of the servo program after data is set in the device used for indirect setting at the positioning control.

POINTS

(1) Indirect setting by word devices of the axis No. cannot be set in the servo program.

(2) Take an interlock by using a start accept flag (M2001 to M2032) not to change the device data for indirect setting until the specified axis has accepted the start command.
If the data is changed before the start command is accepted, positioning may not be controlled in a normal value.

6. POSITIONING CONTROL

This section describes the positioning control methods.

6.1 Basics of Positioning Control

This section describes the common items for positioning control, which is described in detail after Section 6.2.

6.1.1 Positioning speed

The positioning speed is set using the servo program.
Refer to Chapter 5 for details of the servo programs.
The real positioning speed is set in the positioning speed and speed limit value using the servo program is shown below:

- If the positioning speed setting is less than speed limit value, the positioning is executed with the setting positioning speed.
- If the positioning speed setting is less than speed limit value, the positioning is executed with the positioning speed.

Examples

(1) If the speed limit value is 120000[mm/min] and the positioning speed setting is 100000[mm/min], the positioning speed is as follows.

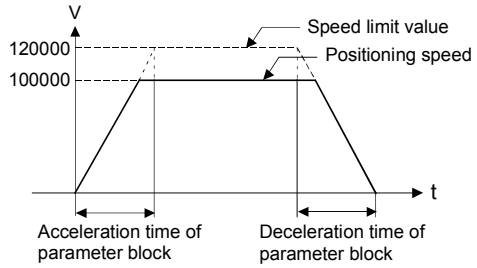

(2) If the speed limit value is 100000[mm/min] and the positioning speed setting is 120000[mm/min], the positioning speed is as follows.

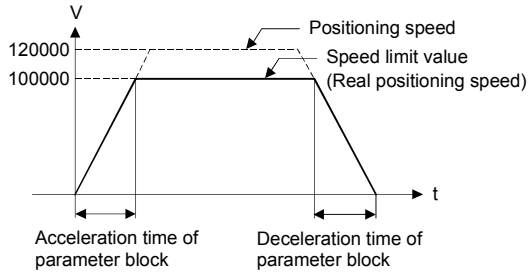

6.1.2 Positioning speed at the interpolation control

The positioning speed of the Motion CPU sets the travel speed of the control system.

(1) 1 axis linear control

Travel speed is the positioning speed of the specified axis at the 1 axis positioning control.

(2) Linear interpolation control

Positioning is controlled with the speed which had the control system specified at the interpolation control.

The positioning speed can be set using one of the following three methods at the 2 to 4 axes linear interpolation control:

- Combined-speed specification
- Long-axis speed specification
- Reference-axis speed specification

Control method of the Motion CPU control for every specified method is shown below.

(a) Combined-speed specification

The Motion CPU calculates the positioning speed of each axis (V_1 to V_2) using the travel value (D_1 to D_4) of each axis based on the positioning speed (V) of the setting control system.

Positioning speed of the control system is called the combined-speed.

Set the combined-speed and the travel value of each axis in the servo program.

Example

2 axes linear interpolation control is shown below.

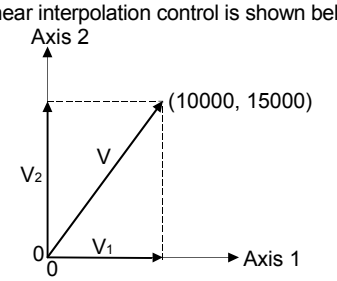

[Program example]

```
<K  50>
ABS-2
Axis              1,      10000   [PLS]
Axis              2,      15000   [PLS]
Combined-speed            7000    [PLS/s]
```

Axis 1 travel value: D_1 = 10000[PLS]
Axis 2 travel value: D_2 = 15000[PLS]
Combined speed: V = 7000[PLS/s]

The Motion CPU calculates the positioning speed of each axis using the following calculation formulas in the above condition:

Axis 1 positioning speed : $V_1 = V \times D_1 / \sqrt{D_1^2 + D_2^2}$
Axis 2 positioning speed : $V_2 = V \times D_2 / \sqrt{D_1^2 + D_2^2}$

(b) Long-axis speed specification

It is controlled based on the positioning speed (Long-axis speed: V) of the largest travel value axis among address set as each axis.

The Motion CPU calculates the positioning speed of other axes (V_1 to V_3) using the each axis travel value (D_1 to D_4).

Set the long-axis speed and the travel value of each axis using the servo program.

Example

4 axes linear interpolation control is shown below.

Axis 1 travel value: D_1 = 10000[PLS]
Axis 2 travel value: D_2 = 15000[PLS]
Axis 3 travel value: D_3 = 5000[PLS]
Axis 4 travel value: D_4 = 20000[PLS]
Long-axis speed: V = 7000[PLS/s]

In this example, since the reference axis is axis 4 of the largest travel value, it is controlled with the positioning speed specified with axis 4.
The Motion CPU calculates the positioning speed of other axes using the following calculation formulas:

[Program example]

```
<K  51>
ABS-4
Axis          1,     10000   [PLS]
Axis          2,     15000   [PLS]
Axis          3,      5000   [PLS]
Axis          4,     20000   [PLS]
Long-axis speed       7000   [PLS/s]
```

Axis 1 positioning speed : $V_1 = D_1 / D_4 \times V$
Axis 2 positioning speed : $V_2 = D_2 / D_4 \times V$
Axis 3 positioning speed : $V_3 = D_3 / D_4 \times V$

The following conversions are performed if the control units of each axis differ.

1) Combination of axes set in [mm] and [inch]
   a) If the interpolation control units are [mm]
      • Travel value: Convert the travel value of axis set in [inch] into [mm] using the formula: inch setting value × 25.4.
      • Speed : The largest travel value axis is controlled with the long-axis speed and the other axes are controlled with the speed based on the long-axis speed, as the result of conversion.
   b) If the interpolation control units are [inch]
      • Travel value: Convert the travel value of axis set in [mm] into [inch] using the formula: mm setting value ÷ 25.4.
      • Speed : The largest travel value axis is controlled with the long-axis speed and the other axes are controlled with the speed based on the long-axis speed, as the result of conversion.
2) Discrepancy between interpolation control units and control units
   • Travel value: The travel value of each axis is converted into [PLS] unit with the electronic gear of self axis.

• Speed : The largest travel value axis is controlled with the long-axis speed and the other axes are controlled with the speed based on the long-axis speed, as the result of conversion.
The positioning speed is converted into [PLS/s] unit as the long-axis speed with the electronic gear that the interpolation control units correspond to control units.

POINTS

(1) Speed limit value and positioning speed
- The setting speed limit value applies to the long-axis speed.
- Be careful that the combined-speed may exceed the speed limit value at the long-axis speed specification.

Example

The following settings at the 2 axes linear interpolation, the combined-speed exceeds the speed limit value.

Axis 1 travel value : 100 [PLS]
Axis 2 travel value : 200 [PLS]
Long-axis speed : 50 [PLS/s]
Speed limit value : 55 [PLS/s]

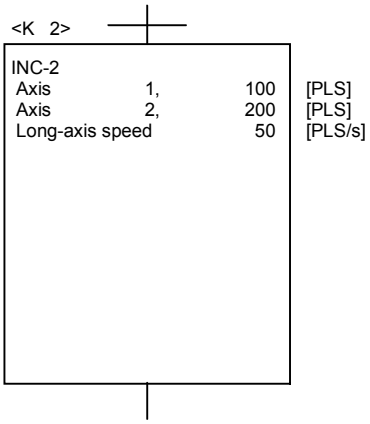

In this example, since the reference-axis is axis 2 of the largest travel value, it is controlled with the speed limit value specified with axis 2.
The positioning speed and combined-speed for each axis are as follows:
Axis 1 positioning speed : 100/ 200 × 50 = 25 [PLS/s]
Axis 2 positioning speed : 50 [PLS/s]
Combined-speed : $\sqrt{25^2 + 50^2}$ = 55.9[PLS/s]

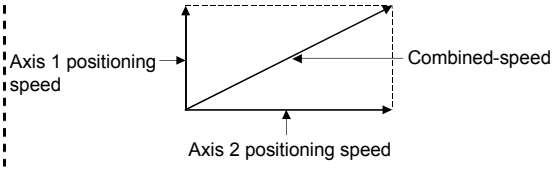

The combined-speed exceeds the speed limit value setting of 55.

(2) Relationship between speed limit value, acceleration time, deceleration time and rapid stop deceleration time.
- The real acceleration time, deceleration time and rapid stop deceleration time are set by the setting long-axis speed.

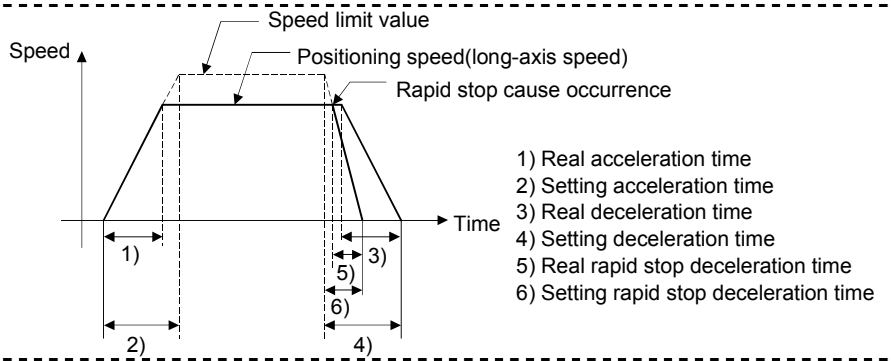

(c) Reference-axis speed specification

The Motion CPU calculates the positioning speed of other axes (V_1 to V_3) based on the positioning speed (reference-axis speed : V) of the setting reference-axis using the each axis travel value (D_1 to D_4).
Set the reference-axis No., reference-axis speed and each axis travel value using the servo program.

Example

4 axes linear interpolation control is shown below.

Axis 1 travel value: D_1 = 10000 [PLS]
Axis 2 travel value: D_2 = 15000 [PLS]
Axis 3 travel value: D_3 = 5000 [PLS]
Axis 4 travel value: D_4 = 20000 [PLS]
Reference axis speed: V = 7000 [PLS/s]
Reference axis: Axis 4

In this example, since the reference-axis is axis 4, it is controlled with the positioning speed specified with axis 4.
The Motion CPU calculates the positioning speed of other axes using the following calculation formulas:

Axis 1 positioning speed : $V_1 = D_1 / D_4 \times V$
Axis 2 positioning speed : $V_2 = D_2 / D_4 \times V$
Axis 3 positioning speed : $V_3 = D_3 / D_4 \times V$

[Program example]

<K 52>

ABS-4			
Axis	1,	10000	[PLS]
Axis	2,	15000	[PLS]
Axis	3,	5000	[PLS]
Axis	4,	20000	[PLS]
Reference-axis speed		70000	[PLS/s]
Reference-axis		4	

POINTS

(1) Reference-axis speed and positioning speed of other axes
- Be careful that the positioning speed of an axis for a larger travel value than the reference-axis may exceed the setting reference-axis speed.

(2) Indirect specification of the reference-axis
- The reference-axis can be set indirectly using the word devices D, W and #. (Refer to Section 5.4.2.)

(3) Relationship between speed limit value, acceleration time, deceleration time and rapid stop deceleration time.
- The real acceleration time, deceleration time and rapid stop deceleration time are set by the reference-axis speed setting

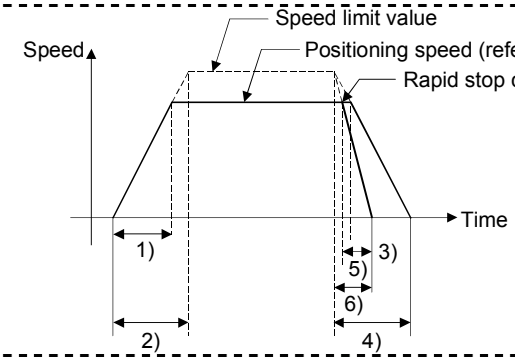

1) Real acceleration time
2) Setting acceleration time
3) Real deceleration time
4) Setting deceleration time
5) Real rapid stop deceleration time
6) Set rapid stop deceleration time

(3) Circular interpolation control

The angular speed is controlled with the setting speed at the circular interpolation control.

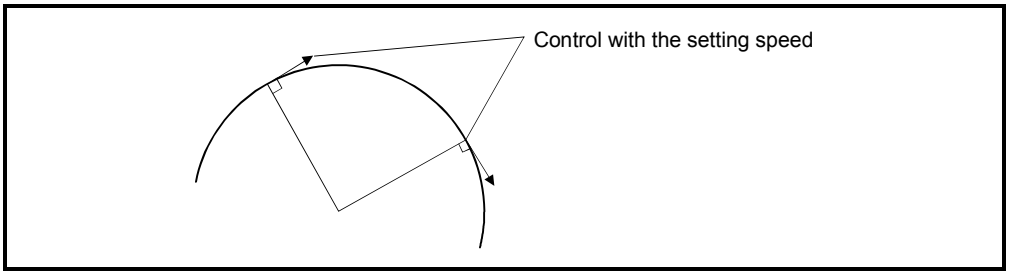

6.1.3 Control units for 1 axis positioning control

It is controlled in the control units specified with the fixed parameters at the 1 axis positioning control.
(The control unit specified with the parameter block is ignored.)

6.1.4 Control units for interpolation control

(1) The interpolation control units specified with the parameter block and the control units of the fixed parameter are checked.
If the interpolation control units specified with the parameter block differ from the control units of the each axis fixed parameter for the interpolation control, it shown below.

	Interpolation control units in the parameter block				Starting method
	mm	inch	degree	PLS	
Condition for normal start	There are axes whose control unit set in the fixed parameter is [mm] and [inch].		There are axes whose control unit set in the fixed parameter is [degree].	There are axes whose control unit set in the fixed parameter is [PLS].	Positioning control starts by the interpolation control units of parameter block.
Condition for unit mismatch error (Error code [40])	Control units of the fixed parameter for all axes differ from the interpolation control units specified with parameter block.				• If the control units of axes to be interpolation-controlled are the same, control starts in the preset control unit. • If the control units of axes to be interpolation-controlled are different, control starts in the unit of highest priority as indicated below. Priority: PLS > degree > inch > mm <Example> If axis is set to 1000[PLS] and 10.000[inch], 10.000[inch] setting is considered to be 10000[PLS].

(2) The combinations of each axis control units for interpolation control are shown in the table below.

	Mm	inch	degree	PLS
mm	1)	2)	3)	3)
inch	2)	1)	3)	3)
degree	3)	3)	1)	3)
PLS	3)	3)	3)	1)

Remarks

1): Same units
2): Combination of [mm] and [inch]
3): Unit mismatch

(a) Same units (1))
The position command is calculated with the setting address (travel value), positioning speed or electronic gear, the positioning is executed.

POINT

If control units for one axis are "degrees" at the circular interpolation control, use "degrees" also for the other axis.

(b) Combination of [mm] and [inch] (2))
- If interpolation control units are [mm], positioning is controlled by calculating position commands from the address, travel value, positioning speed and electronic gear, which have been converted to [mm] using the formula: inch setting value × 25.4 = mm setting value.
- If interpolation control units are [inch], positioning is controlled by calculating position commands from the address, travel value, positioning speed and electronic gear, which have been converted to [inch] using the formula: mm setting value ÷ 25.4 = inch setting value.

(c) Discrepancy units (3))
- The travel value and positioning speed are calculated for each axis.
  a) The electronic gear converts the travel value for the axis to [PLS].
  b) For axis where the units match, the electronic gear converts the positioning speed to units of [PLS/s].
  Positioning is conducted using position commands calculated from travel values converted to [PLS] and speeds and electronic gear converted to [PLS/s].
- If the interpolation control units match for two or more axes at the 3-axes or more linear interpolation, the positioning speed is calculated with the electronic gear for the axis with the lowest No.

6.1.5 Control in the control unit "degree"

If the control units are "degree", the following items differ from other control units.

(1) Current value address

The current addresses in the control unit "degree" are ring addresses from 0° to 360°.

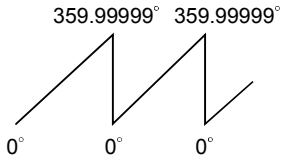

(2) Stroke limit valid/invalid setting

The upper/lower limit value of the stroke limit in the control unit "degree" is within the range of 0° to 359.99999°

(a) Stroke limit is valid

Set the "lower limit value to upper limit value of the stroke limit" in a clockwise direction to validate the stroke limit value.

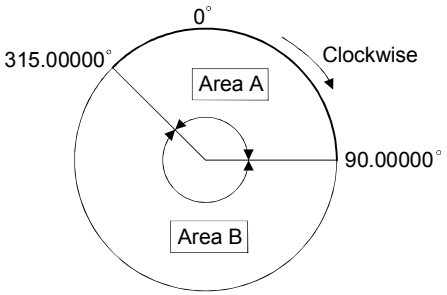

1) If travel range in area A is set, the limit values are as follows:
   a) Lower stroke limit value: 315.00000°
   b) Upper stroke limit value: 90.00000°
2) If travel range in area B is set, the limit values are as follows:
   a) Lower stroke limit lower limit value: 90.00000°
   b) Upper stroke limit upper limit value: 315.00000°

(b) Stroke limit is invalid

Set the "upper stroke limit value" equal to "lower stroke limit value" to invalidate the stroke limit value.

It can be controlled regardless the stroke limit settings.

POINTS

(1) Circular interpolation including the axis which set the stroke limit as invalid cannot be executed.

(2) When the upper/lower limit value of the axis which set the stroke limit as valid are changed, perform the home position return after that.

(3) When the stroke limit is set as valid in the incremental data system, perform the home position return after power supply on.

(3) Positioning control

Positioning control method in the control unit "degree" is shown below.

(a) Absolute data method (ABS☐ instructions)

Positioning in a near direction to the specified address is performed based on the current value.

Examples

(1) Positioning is executed in a clockwise direction to travel from the current value of 315.00000°to 0°.

(2) Positioning is executed in a counter clockwise direction to travel from the current value of 0° to 315.00000°.

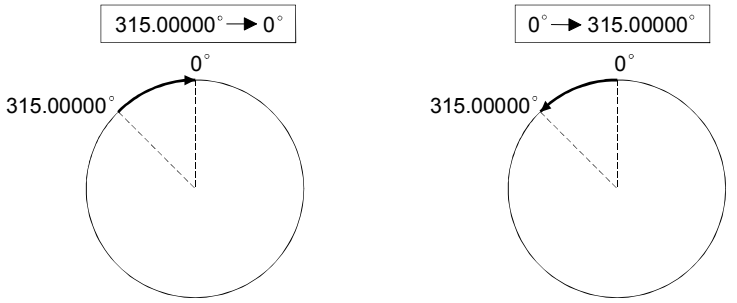

POINTS

(1) The positioning direction of absolute data method is set a clockwise/counter clockwise direction by the setting method of stroke limit range, positioning in the shortest direction may not be possible.

Example

Travel from the current value 0° to 315.00000°must be clockwise positioning if the lower stroke limit value is set to 0°and the upper limit value is set to 345.00000°.

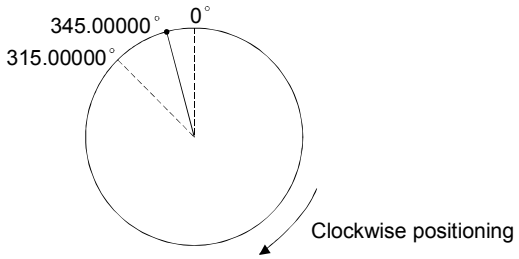

(2) Set the positioning address within the range of 0° to 360°.
Use the incremental data method for positioning of one revolution or more.

(b) Incremental data method (INC☐ instructions)

Positioning by the specified travel value to the specified direction.
The travel direction is set by the sign of the travel value, as follows:
1) Positive travel value .....Clockwise rotation
2) Negative travel value.....Counter clockwise rotation

POINT

Positioning of 360° or more can be executed in the incremental data method.

6.1.6 Stop processing and restarting after stop

This section describes the stop processing after a stop cause is input during positioning and restarting after stop.

(1) Stop processing

(a) Stop processing methods

Stop processing during positioning by stop cause are as follows.

1) Deceleration stop (Process 1).....Deceleration stop by "stop deceleration time" of parameter block.

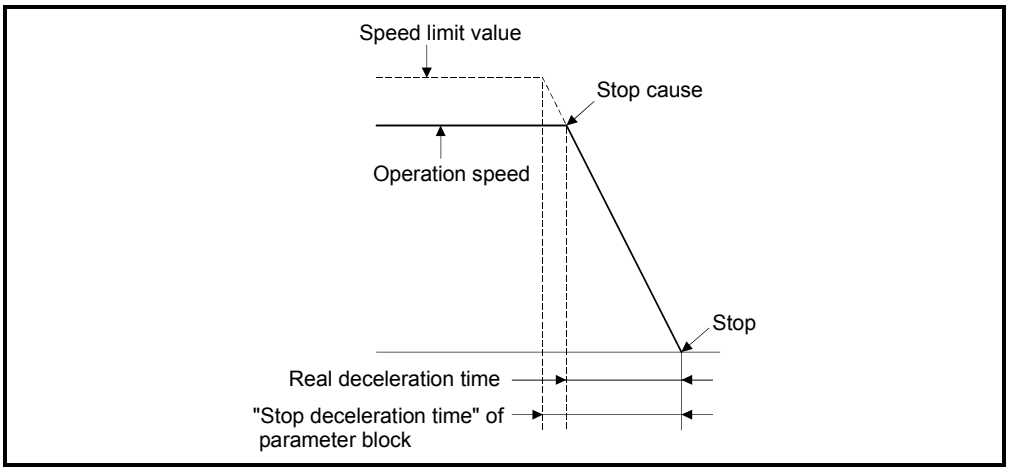

2) Rapid stop (Process 2).....Deceleration stop by "rapid stop deceleration time" of parameter block.

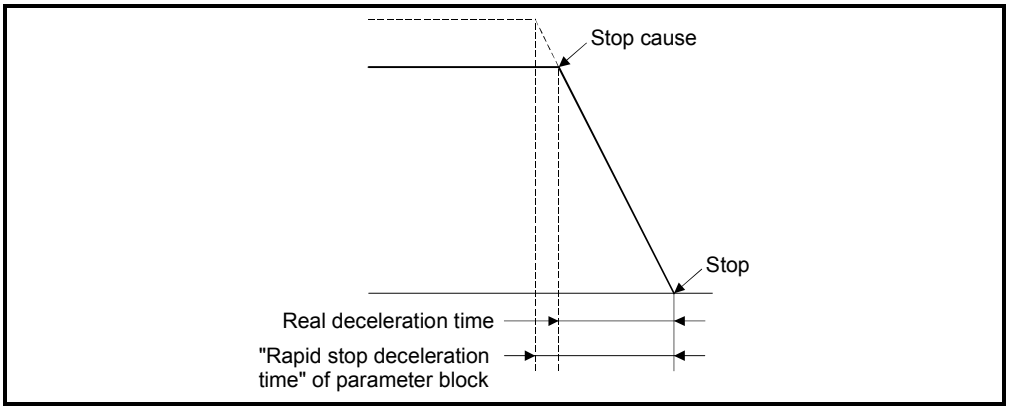

3) Immediate stop (Process 3).....Stop without deceleration processing.

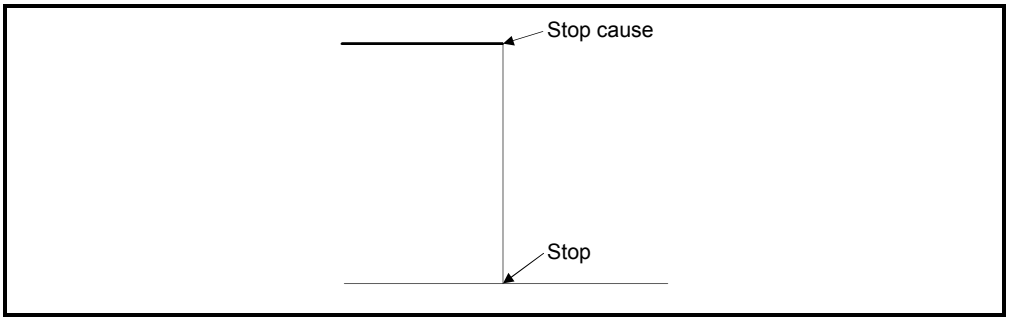

4) Stop using the manual pulse generator (Process 4)
.....Deceleration stop by the "deceleration time" of
(Smoothing magnification + 1) × 56.8[ms].

(b) Priority for stop processing
Priority for stops when a stop cause is input is as follows:

Process 1 < Process 2 < Process 3

Example

A rapid stop is started if a rapid stop cause is input during one of the following types of deceleration stop processing :
• After automatic deceleration start during positioning control;
• During deceleration after JOG start signal turns off;
• During deceleration stop processing by stop cause (Process 1).

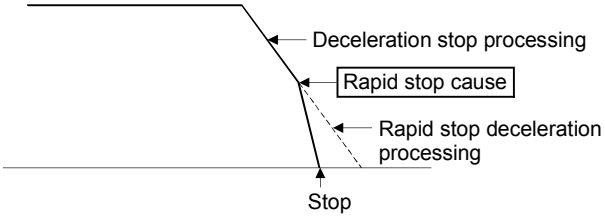

(c) Stop commands and stop causes

Some stop commands and stop causes affect individual axis and others affect all axes.

However, during interpolation control, stop commands and stop causes which affect individual axis also stop the interpolation axis.

For example, both Axis 1 and Axis 2 stop after input of a stop command (stop cause) during the Axis 1 and Axis 2 interpolation control.

No.	Stop cause	Axis classification	Stop processing					Error processing
			Positioning control	Speed control	Jog operation	Home position return	Manual pulse generator	
1	STOP signal input (STOP) of the Q172LX ON	Individual	Process 1 or Process 2 • According to deceleration processing on STOP input parameter of parameter block.				Process 4	Refer to "APPENDIX 1 Error Codes Stored Using The Motion CPU"
2	Stop command "M3200 + 20n" ON		Process 1					
3	Rapid stop command "M3201 + 20n" ON		Process 2					
4	FLS input signal OFF of Q172LX/servo amplifier		Process 1 or Process2 • According to deceleration processing on STOP input parameter of parameter block.					
5	RLS input signal OFF of Q172LX/servo amplifier							
6	Servo error detection "M2408 +20n" ON		Process 3					
7	PLC ready flag M2000 OFF	All axes	Process 1				Process 4	
8	Deceleration stop using a peripheral devices (Note-1)		Process 1					
9	Rapid stop of the all axes using a peripheral devices (Note-1)		Process 2					
10	Motion CPU stop		Process 1					
11	Motion CPU reset		Process 3					—
12	PCPU WDT error		Process 3					M9073 (PCPU WDT error) ON
13	Other CPU WDT error		Process 1					—
14	Motion CPU power off		Process 3					—
15	Forced stop		Process 3					Servo amplifier is stopped at the servo OFF.
16	Servo amplifier power off	Individual	Process 3					Major error at the start (no servo)
17	Speed change to speed "0"	Individual (Note-2)	Process 1				—	—

(Note-1): Test mode

(Note-2): Applies to all axes used in the servo program set in the speed "0".

(2) Re-starting after stop

(a) If it stopped by the stop command or stop cause (except change speed to speed "0"), re-starting is not possible.
However, it stopped by the STOP input of the Q172LX ON, the stop command (M3200+20n) ON or the rapid stop command (M3201+20n) ON during speed/position switching control, re-starting is possible using VPSTART instruction.

(b) If it stopped by the speed change to speed "0" using CHGV instruction, re-starting is possible by executing the speed change to speed other than "0".

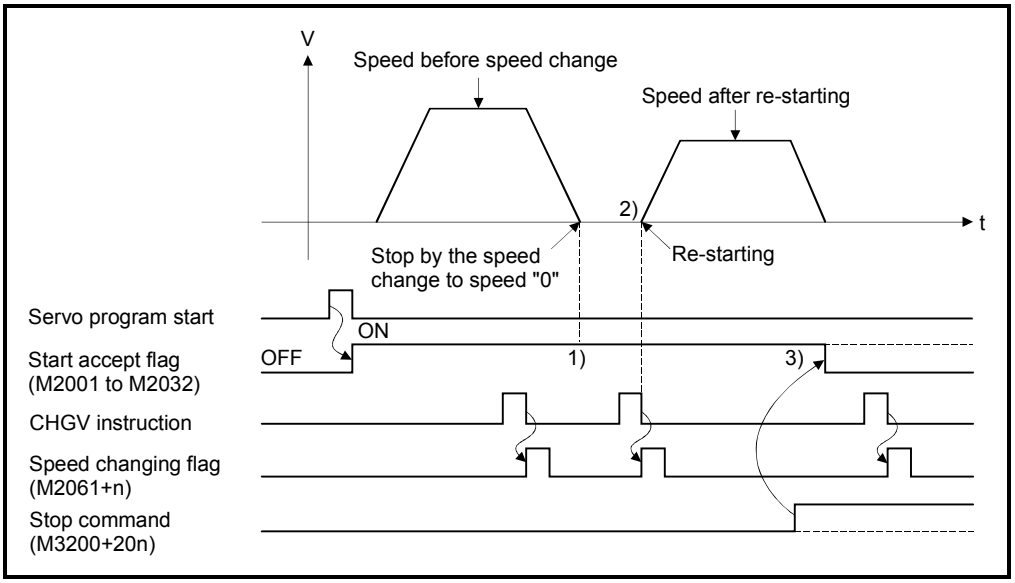

1) The start accept flag (M2001 to M2032) remains on after stop by the speed change to "0".
2) Re-starting by changing the speed again.
3) However, if the start accept flag (M2001 to M2032) turns off by turning on the stop command (M3200+20n), re-starting is not possible even if make a speed change once again.

(3) Continuation of positioning control

This section describes the processing which performed servo program No. which was being performed before the stop, after stop by turning on the STOP input of the Q172LX ON, the stop command (M3200+20n) ON or the rapid stop command (M3201+20n) ON.

(a) 1 axis linear control/2 or 3 axes linear interpolation control

1) For ABS□ ..... Positioning control from the stop address to target address by the target address specification.

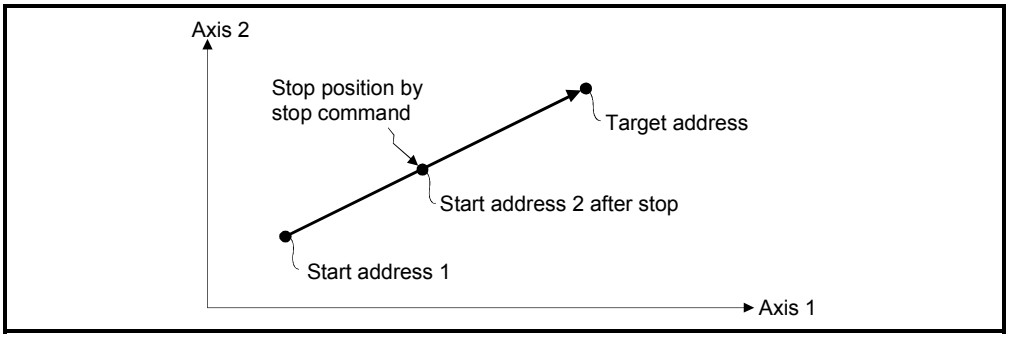

2) For INC□ ..... Positioning control of the travel value from the stop address.

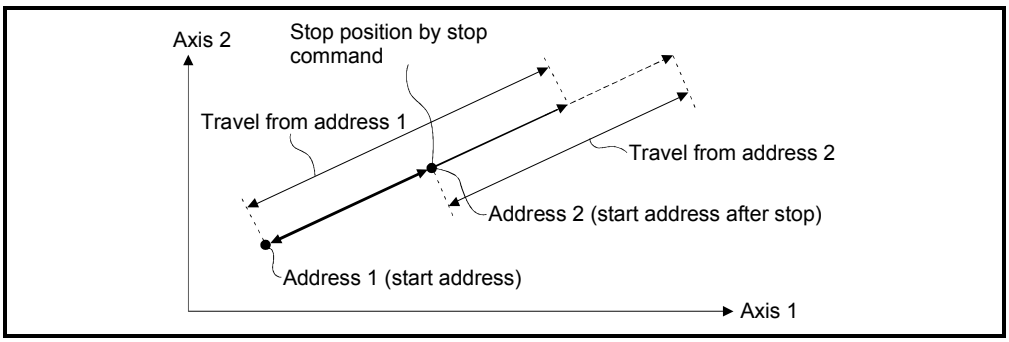

When the address 2 is moved to the same address (address which calculates with start address + specified travel value) using the INC□, the following processing using the servo program and Motion SFC program is required.

[Servo Program]

The travel value of servo program which executes the positioning from address is set indirectly by the word devices, as follows.

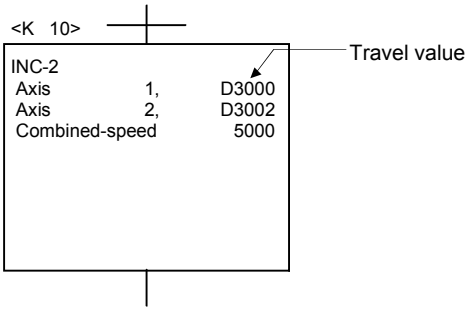

[Processing in the Motion SFC Program]

1. Transfer the start address to word devices of the Motion CPU before starting.
2. Calculate the target address by applying the travel value to the address before starting.
3. Calculate the residual travel value by subtracting the stop address from the target address.
4. Store the residual travel value in the servo program for travel value register.
5. Perform the servo program.

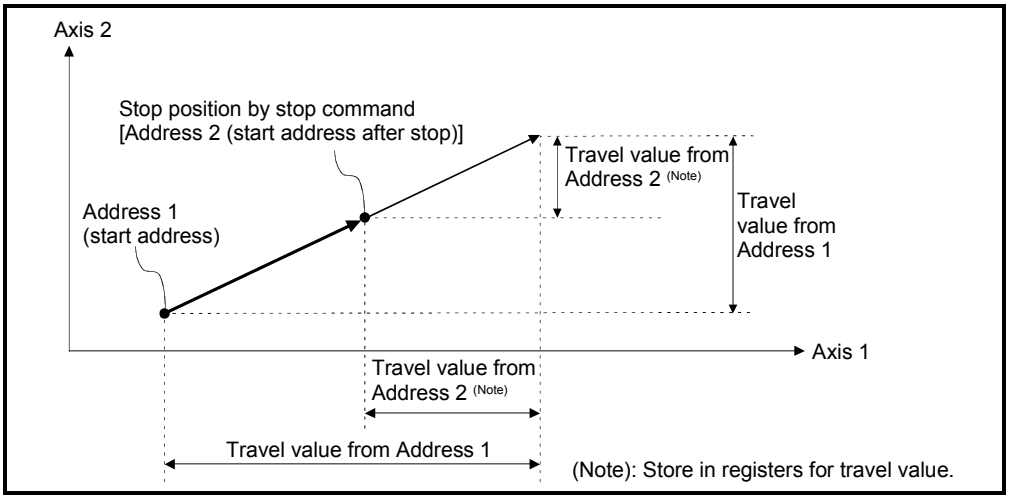

6.1.7 Acceleration/deceleration processing

Acceleration/deceleration are processed by the following two methods.

(1) Trapezoidal acceleration/deceleration processing

This is a conventional linear acceleration/deceleration processing.
The acceleration/deceleration graph resembles a trapezoid, as shown in the diagram below.

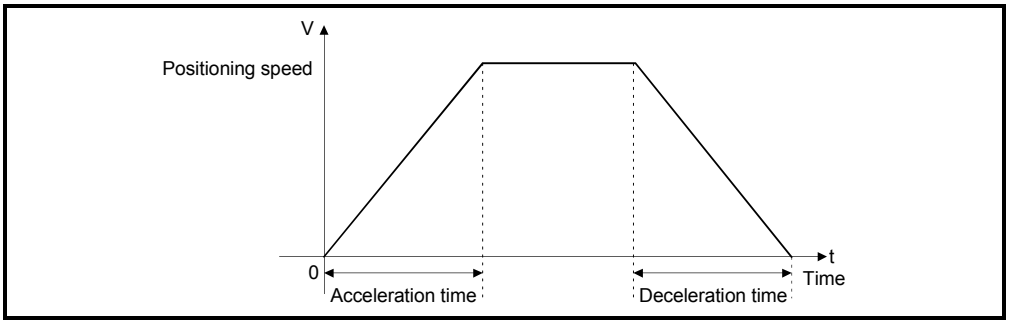

(2) S-curve acceleration/deceleration processing

S-curve ratio is set as a parameter to provide gentler acceleration and deceleration than trapezoidal processing. The acceleration/deceleration graph is sinusoidal, as shown in the diagram below.
Set the S-curve ratio in the parameter block (Refer to Section 4.3.2) or using the servo program.

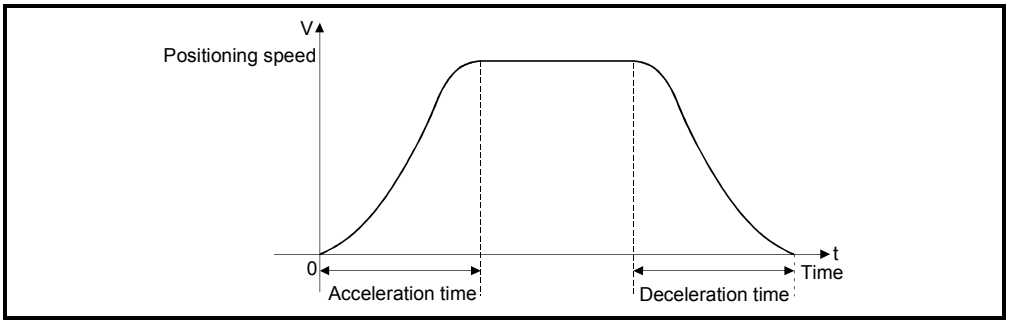

S-curve ratio set the part of the sine curve used to produce the acceleration and deceleration curve as shown in the diagram below.

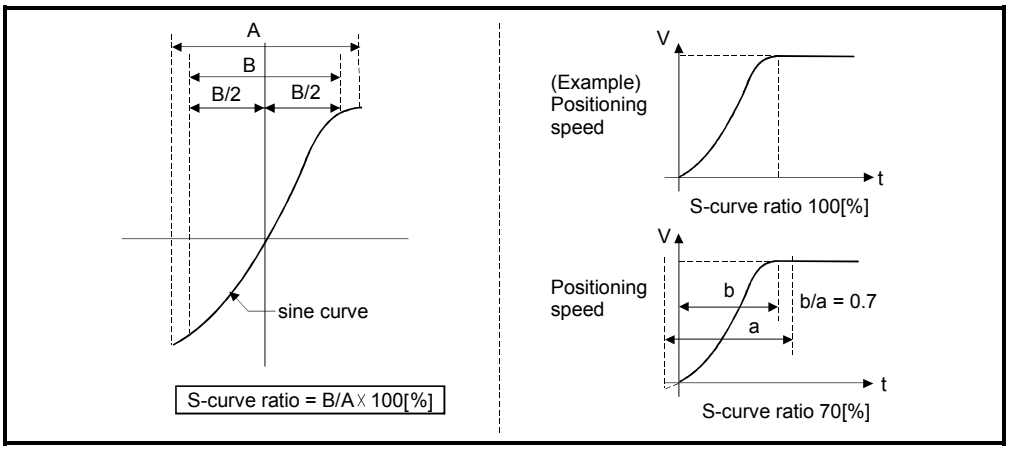

S-curve ratio can be set by the servo program is following two methods.

(a) Direct specification

S-curve ratio is set directly as a numeric value from 0 to 100.

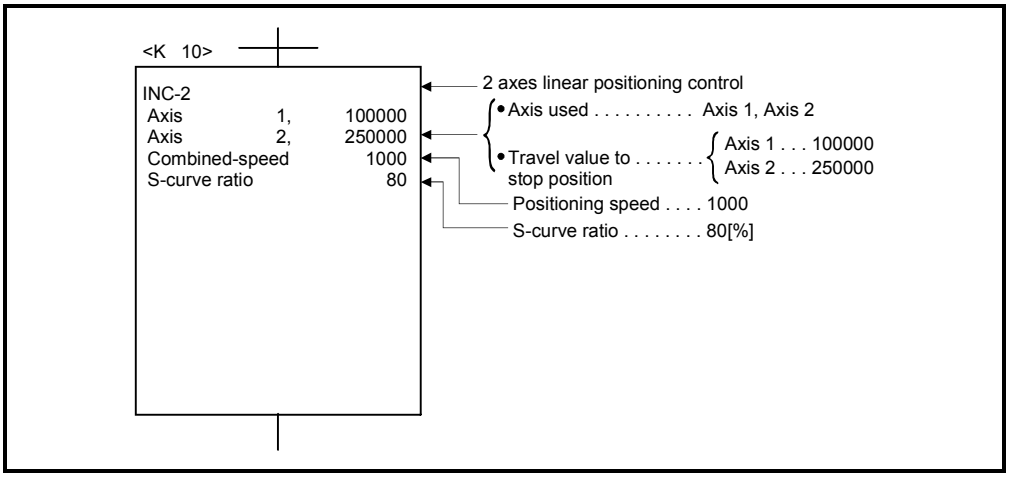

(b) Indirect specification

S-curve ratio is set by the contents of data registers.

The usable data registers are shown below.

Word devices	Usable devices
D	800 to 8191
W	0 to 1FFF
#	0 to 7999

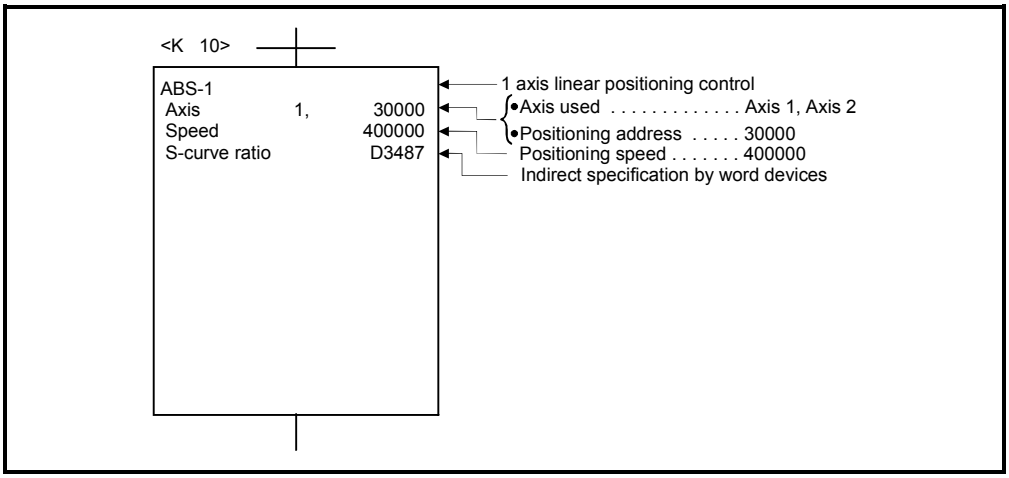

6.2 1 Axis Linear Positioning Control

Positioning control from the current stop position to the fixed position for specified axis is executed.
Positioning is controlled using ABS-1 (Absolute data method) or INC-1 (Incremental data method) servo instructions.

Servo instruction	Positioning method	Number of control axes	Items are set in peripheral devices																						Speed change
			Common							Arc			Parameter block										Others		
			Parameter block No.	Axis	Address/travel value	Command speed	Dwell time	M-code	Torque limit value	Auxiliary point	Radius	Central point	Control unit	Speed limit value	Acceleration time	Deceleration time	Rapid Stop deceleration time	Torque limit value	Deceleration processing on stop input	Allowable error range for circular interpolation	S-curve ratio	Cancel	WAIT-ON/OFF	
ABS-1	Absolute	1	△	○	○	○	△	△						△	△	△	△	△	△		△	△		Valid
INC-1	Incremental																							

○: Must be set
△: Set if required

[Control details]

Control using ABS-1 (Absolute data method)

(1) Positioning control from the current stop address (pre-positioning address) based on the home position to the specified address is executed.

(2) The travel direction is set by the current stop address and the specified address.

Example

When the current stop address is 1000, and the specified address is 8000.

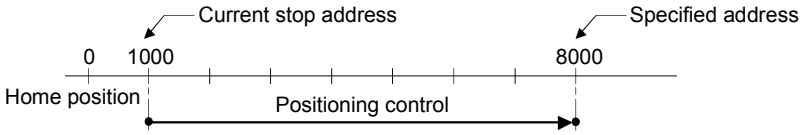

Fig.6.1 Positioning using absolute data method

Control using INC-1 (Incremental data method)

(1) Positioning control of the specified travel value from the current stop position address is executed.

(2) The travel direction is set by the sign (+/ -) of the travel value, as follows:
- Positive travel value .....Positioning control to forward direction (Address Increase direction)
- Negative travel value.....Positioning control to reverse direction (Address decrease direction)

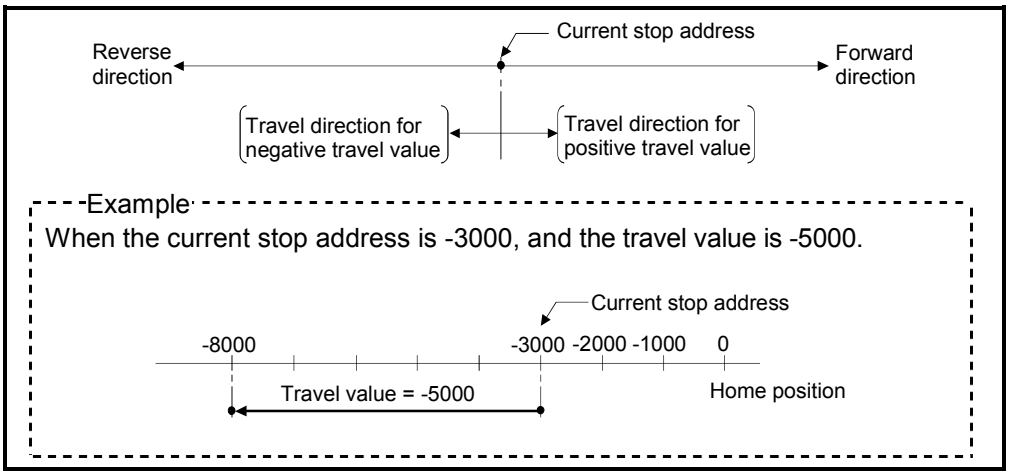

Fig.6.2 Positioning using incremental data method

[Program]

Servo program No. 0 for positioning control is shown as the following conditions.

(1) System configuration

1 axis linear positioning control of Axis 4.

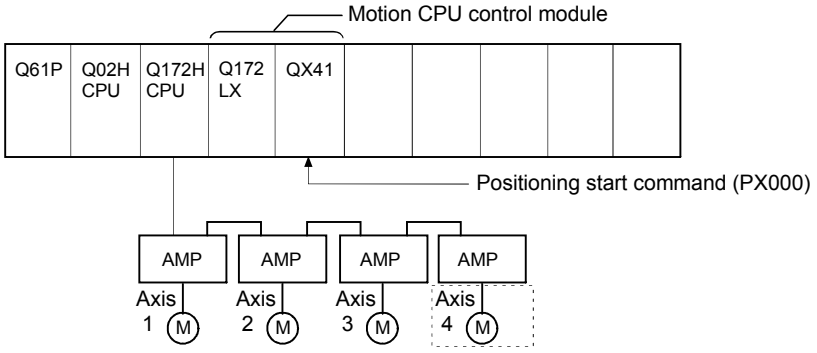

(2) Positioning operation details

Positioning using the servo program No.0 is shown below.

In this example, Axis 4 is used in servo program No.0.

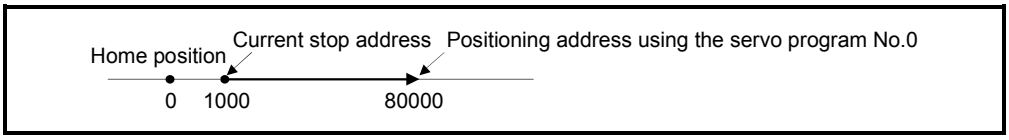

(3) Operation timing

Operation timing for the servo program No.0 is shown below.

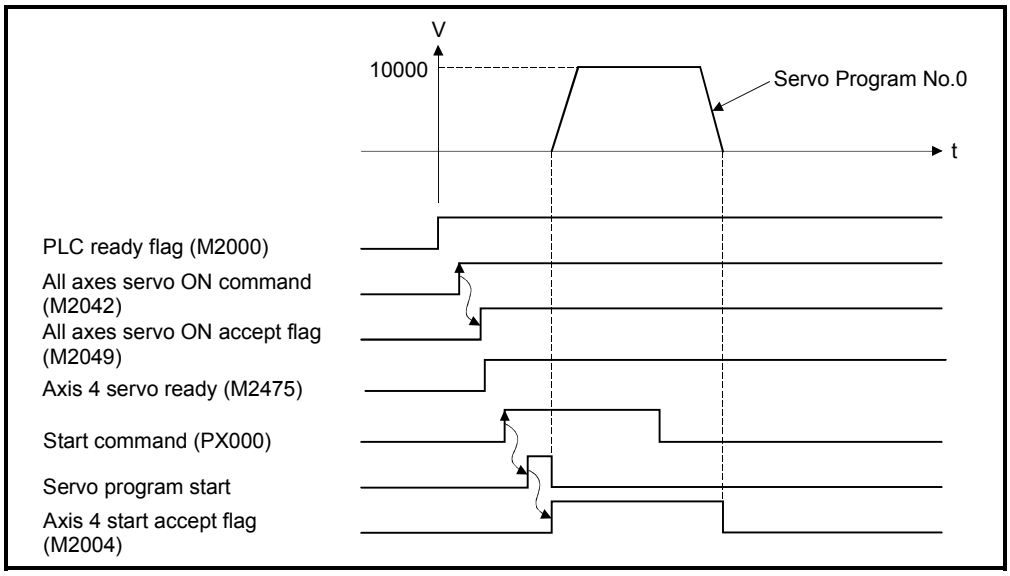

(4) Servo program

Servo program No.0 for positioning control is shown below.

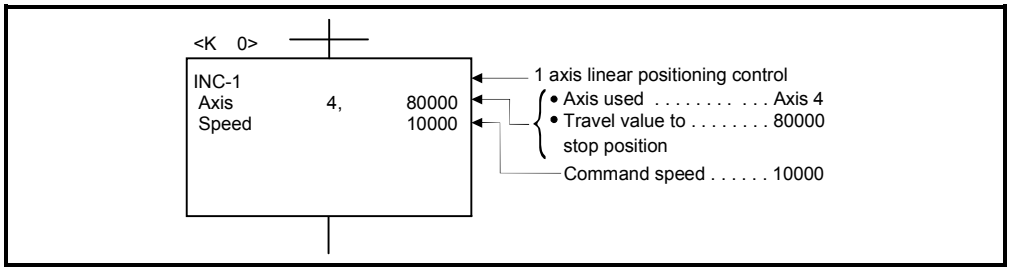

(5) Motion SFC program

Motion SFC program for which executes the servo program is shown below.

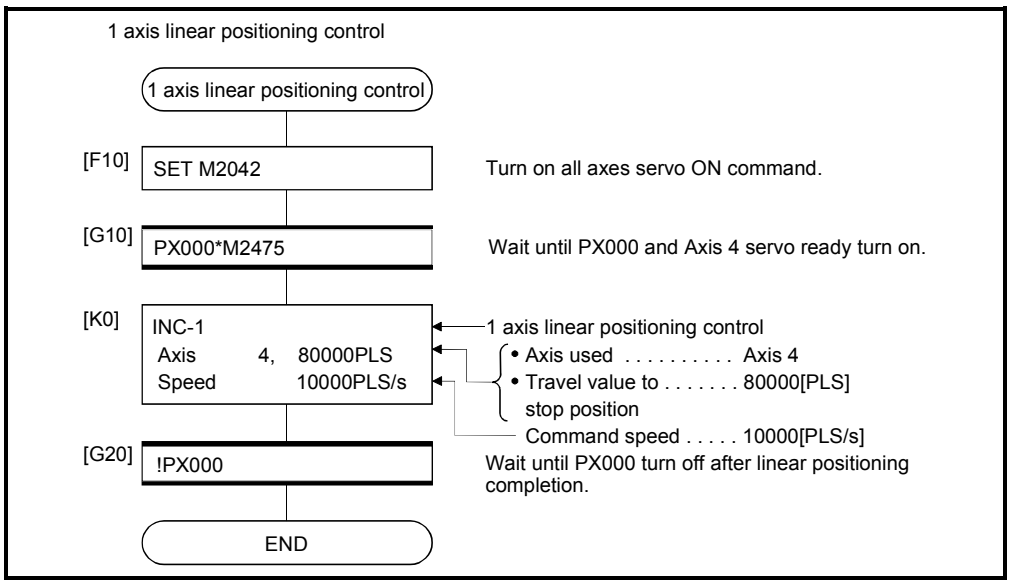

(Note): Example of the above Motion SFC program is started using the automatic start or PLC program.

6.3 2 Axes Linear Interpolation Control

Linear interpolation control from the current stop position with the specified 2 axes is executed.
ABS-2 (Absolute data method) and INC-2 (Incremental data method) servo instructions are used in the 2 axes linear interpolation control.

Servo instruction	Positioning method	Number of control axes	Items are set in peripheral devices																							Speed change
			Common							Arc			Parameter block											Others		
			Parameter block No.	Axis	Address/travel value	Command speed	Dwell time	M-code	Torque limit value	Auxiliary point	Radius	Central point	Control unit	Speed limit value	Acceleration time	Deceleration time	Rapid stop deceleration time	Torque limit value	Deceleration processing on stop input	Allowable error range for circular interpolation	S-curve ratio	Cancel	WAIT-ON/OFF	
ABS-2	Absolute	2	△	○	○	○	△	△					△	△	△	△	△	△	△		△	△		Valid
INC-2	Incremental																							

○: Must be set
△: Set if required

[Control details]

Control using ABS-2 (Absolute data method)

(1) 2 axes linear interpolation from the current stop address (X1 or Y1) based on the home position to the specified address (X2 or Y2) is executed.

(2) The travel direction is set by the stop address (starting address) and positioning address of each axis.

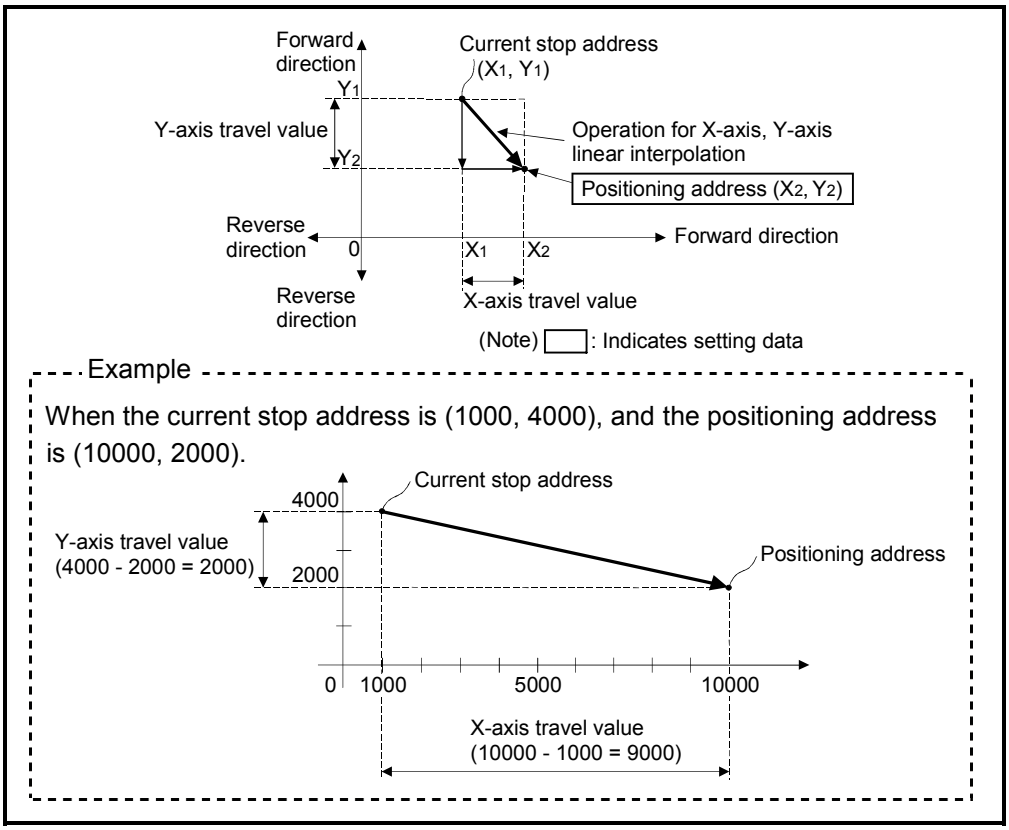

Fig.6.3 Positioning using absolute data method

Control using INC-2 (Incremental data method)

(1) Positioning control from the current stop address to the position which combined travel direction and travel value specified with each axis is executed.

(2) The travel direction for each axis is set by the sign (+/ -) of the travel value for each axis, as follows:
- Positive travel value .....Positioning control to forward direction (Address increase direction)
- Negative travel value.....Positioning control to reverse direction (Address decrease direction)

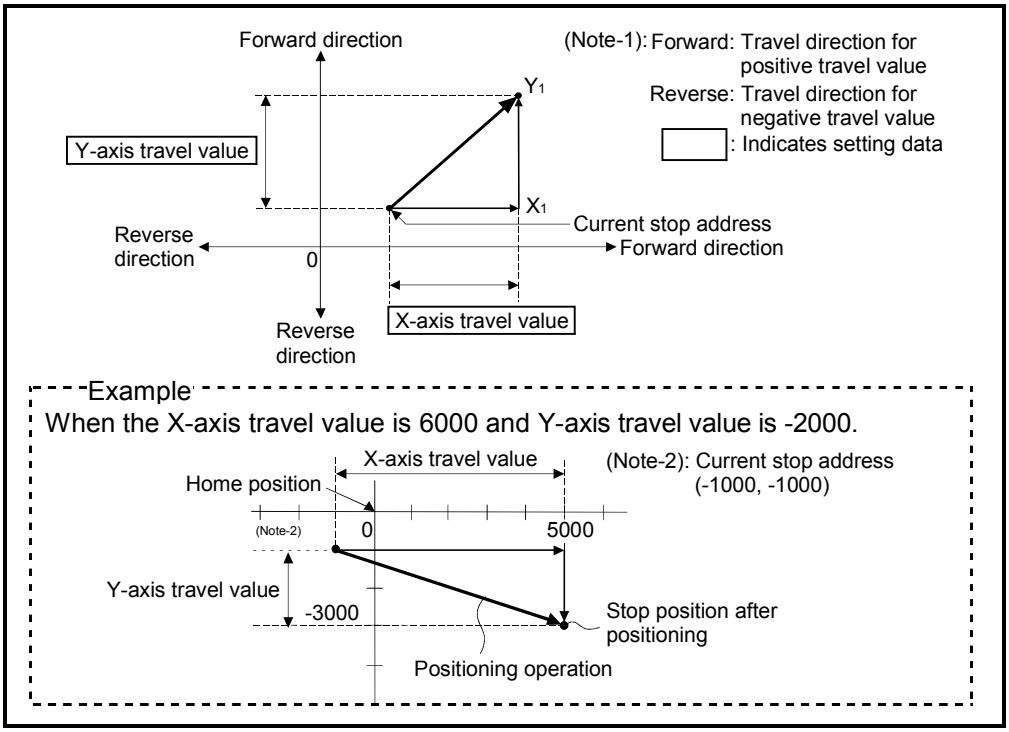

Fig.6.4 Positioning using incremental data method

[Program]

Program for 2 axes linear interpolation control is shown as the following conditions.

(1) System configuration

2 axes linear interpolation control of Axis 3 and Axis 4.

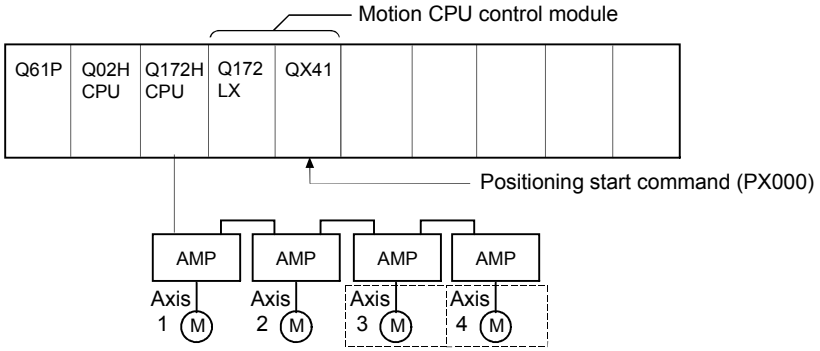

(2) Positioning operation details

The positioning is used the Axis 3 and Axis 4 servomotors.
The positioning operation by the Axis 3 and Axis 4 servomotors is shown in the diagram below.

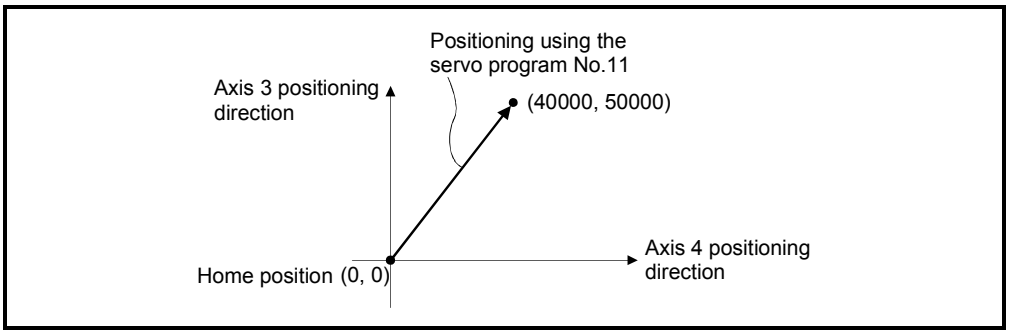

(3) Positioning conditions

(a) Positioning conditions are shown below.

Item	Servo Program No.
	No.11
Positioning speed	30000

(b) Positioning start command ..... Turning PX000 off to on (OFF → ON)

(4) Operation timing

Operation timing for 2 axes linear interpolation control is shown below.

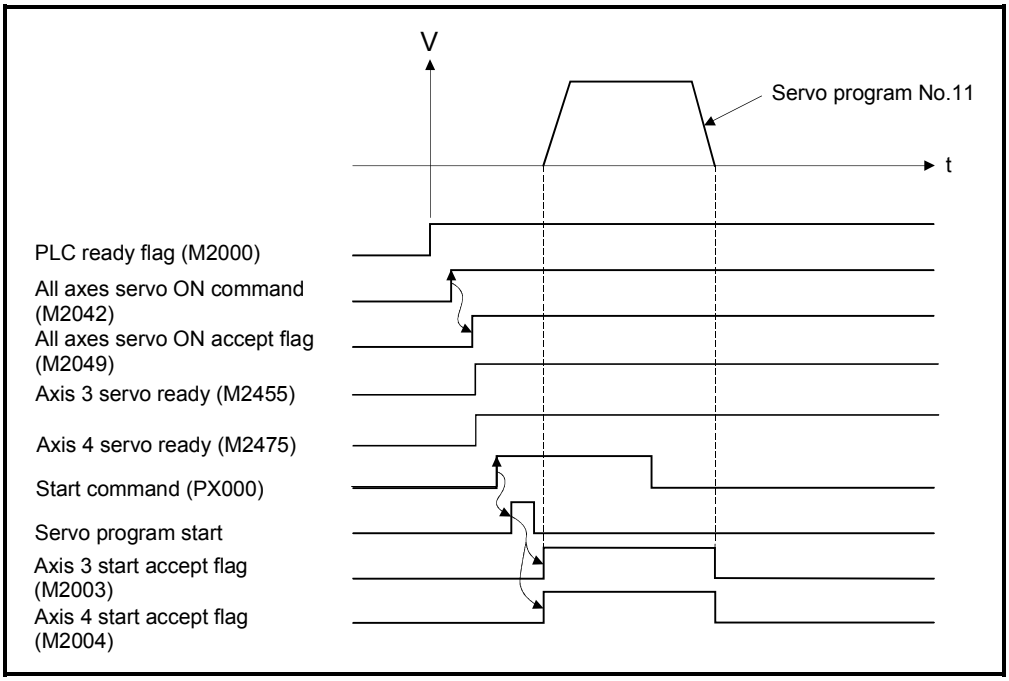

(5) Servo program

Servo program No.11 for 2 axes linear interpolation control is shown below.

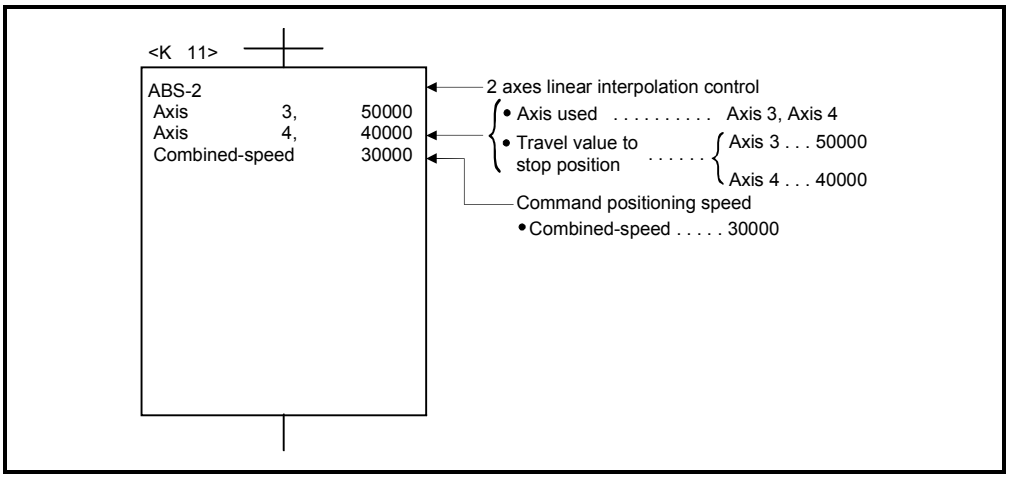

(6) Motion SFC program

Motion SFC program for which executes the servo program is shown below.

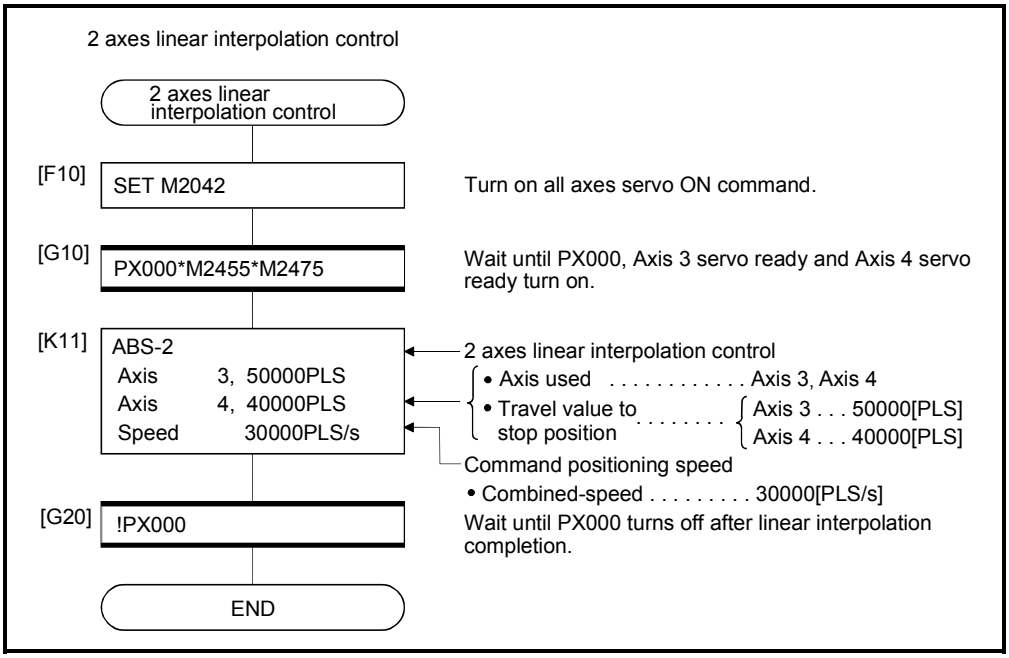

(Note): Example of the above Motion SFC program is started using the automatic start or PLC program.

6.4 3 Axes Linear Interpolation Control

Linear interpolation control from the current stop position with the specified 3 axes is executed.

Servo instruction	Positioning method	Number of control axes	Items are set in peripheral devices																							Speed change
			Common							Arc			Parameter block											Others		
			Parameter block No.	Axis	Address/travel value	Command speed	Dwell time	M-code	Torque limit value	Auxiliary point	Radius	Central point	Control unit	Speed limit value	Acceleration time	Deceleration time	Rapid stop deceleration time	Torque limit value	Deceleration processing on stop input	Allowable error range for circular interpolation	S-curve ratio	Cancel	WAIT-ON/OFF	
ABS-3	Absolute	3	△	○	○	○	△	△					△	△	△	△	△	△	△		△	△		Valid
INC-3	Incremental																							

○: Must be set
△: Set if required

[Control details]

Control using ABS-3 (Absolute data method)

(1) 3 axes linear interpolation from the current stop address (X_1, Y_1 or Z_1) based on the home position to the specified positioning address (X_2, Y_2, Z_2) is executed.

(2) The travel direction is set by the stop address and specified address of each axis.

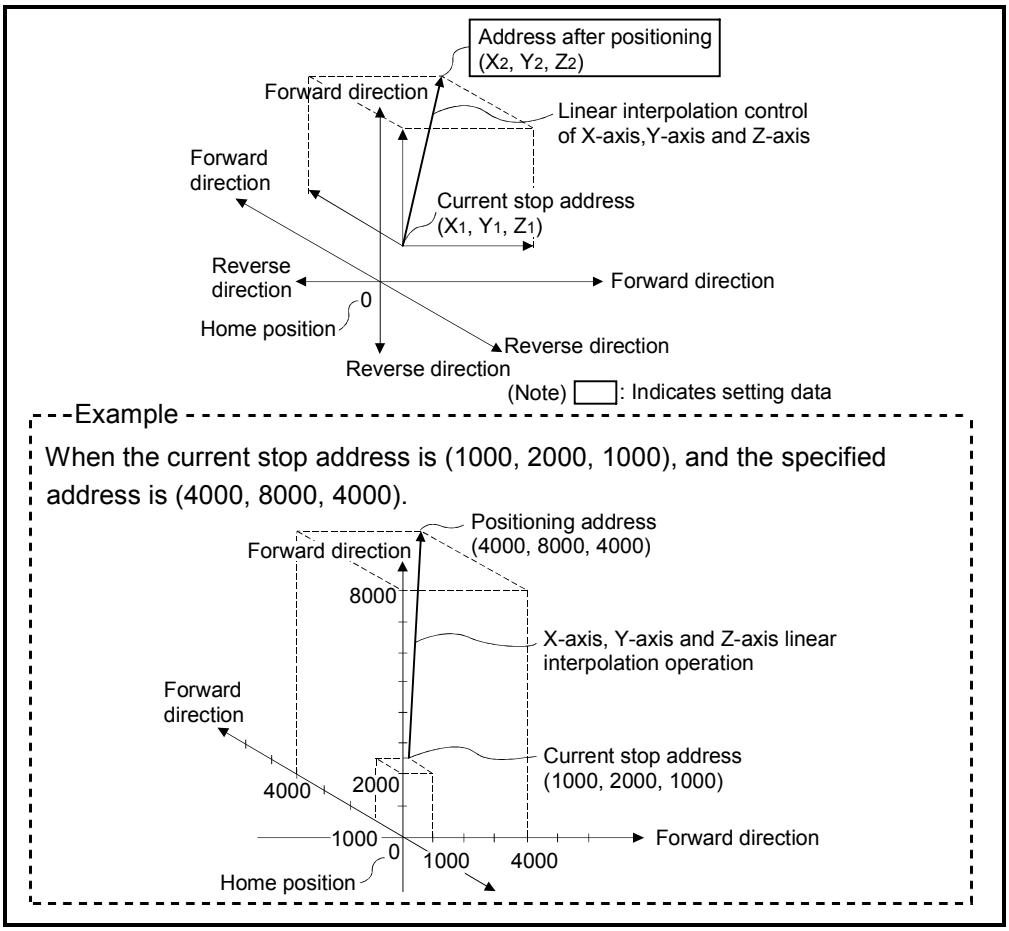

Fig.6.5 Positioning using absolute data method

Control using INC-3 (Incremental data method)

(1) Positioning control from the current stop address to the position which combined travel direction and travel value specified with each axis is executed.

(2) The travel direction for each axis is set by the sign (+/ -) of the travel value for each axis, as follows:
- Positive travel value .....Positioning control to forward direction (Address increase direction)
- Negative travel value.....Positioning control to reverse direction (Address decrease direction)

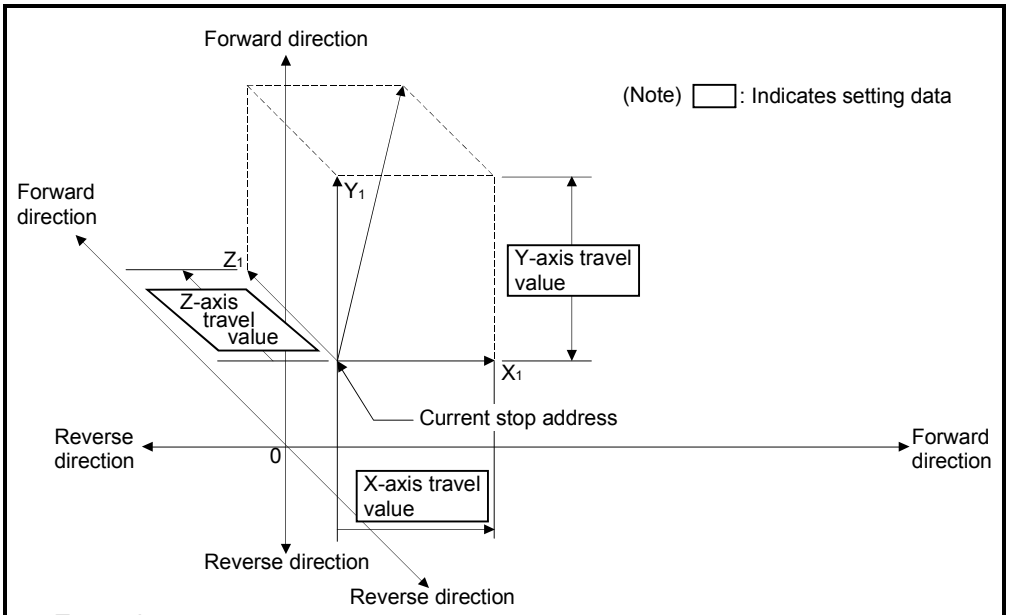

Example

When the X-axis travel value is 10000, Y-axis travel value is 5000 and X-axis value is 6000.

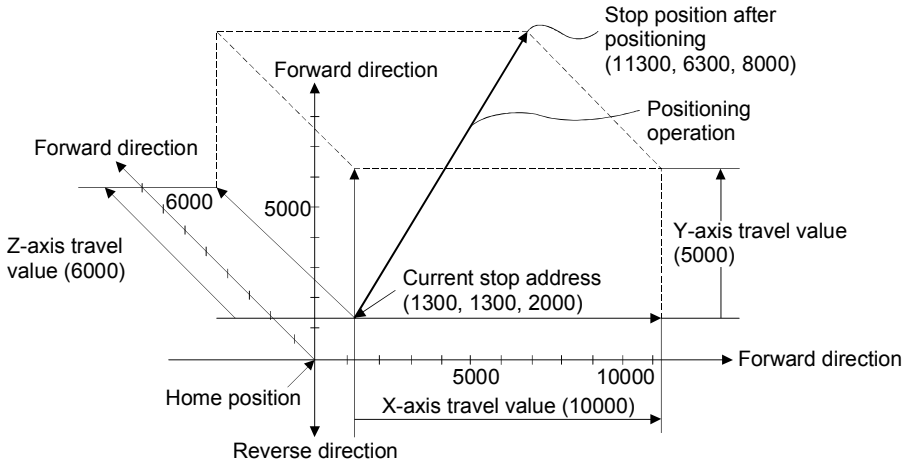

Fig.6.6 Positioning using incremental data method

[Program]

Program for 3 axes linear interpolation control is shown as the following conditions.

(1) System configuration

3 axes linear interpolation control of Axis 1, Axis 2 and Axis 3.

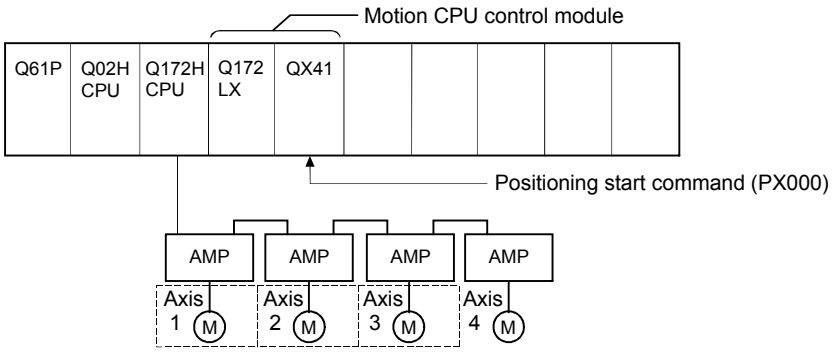

(2) Positioning operation details

The positioning is used the Axis 1, Axis 2 and Axis 3 servomotors.

The positioning operation by the Axis 1, Axis 2 and Axis 3 servomotors is shown in the diagram below.

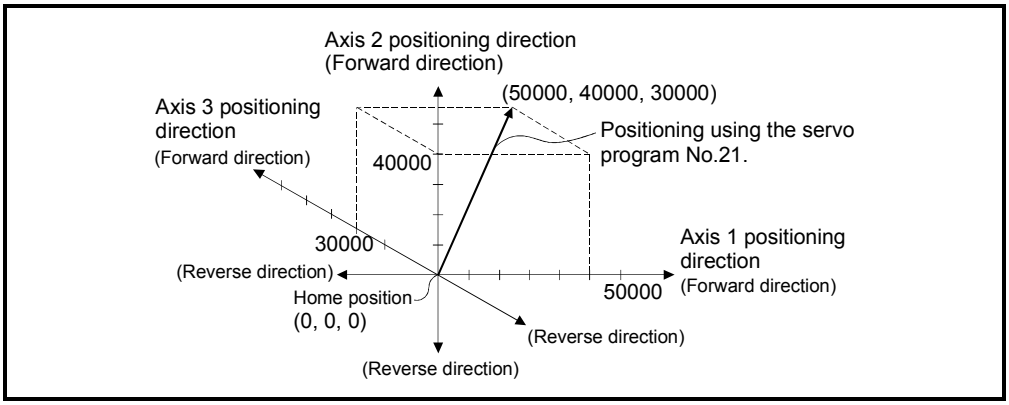

(3) Positioning conditions

(a) Positioning conditions are shown below.

Item	Servo Program No.
	No.21
Positioning method	Absolute data method
Positioning speed	1000

(b) Positioning start command ..... Turning PX000 off to on (OFF → ON)

(4) Operation timing

Operation timing for 3 axes linear interpolation control is shown below.

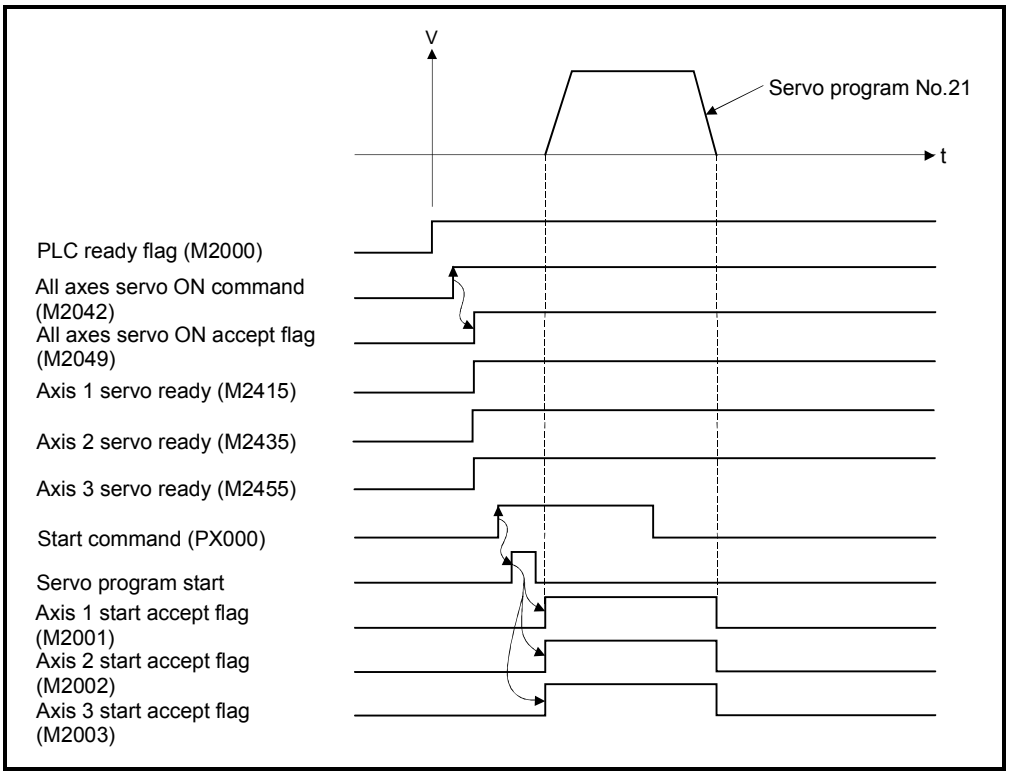

(5) Servo program

Servo program No.21 for 3 axes linear interpolation control is shown below.

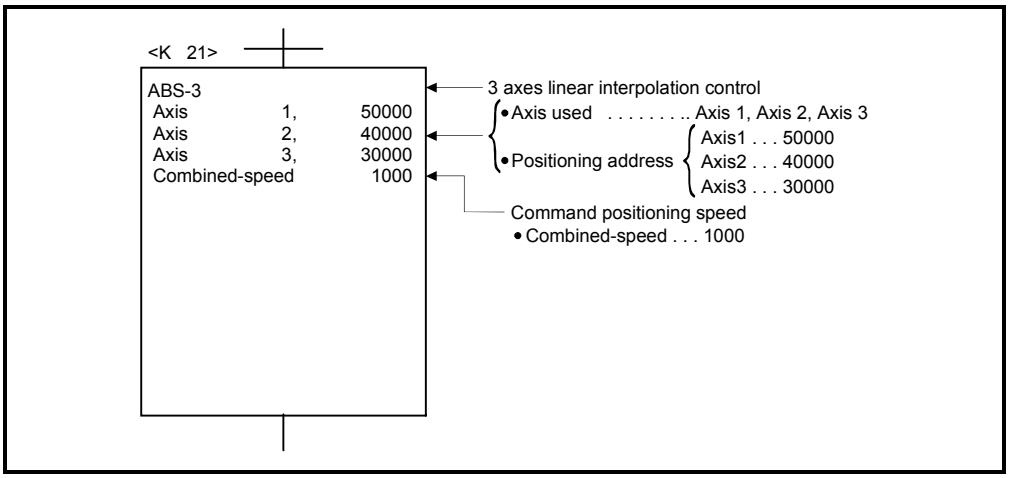

(Note): Example of the Motion SFC program for positioning control is shown next page.

(6) Motion SFC program

Motion SFC program for which executes the servo program is shown below.

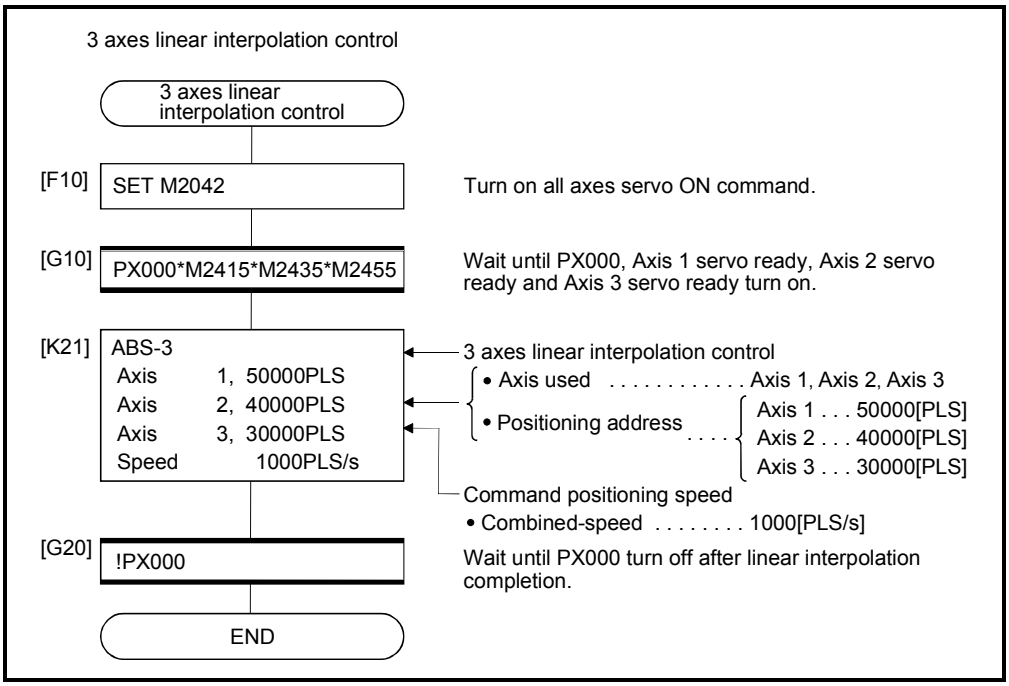

(Note): Example of the above Motion SFC program is started using the automatic start or PLC program.

6.5 4 Axes Linear Interpolation Control

Linear interpolation control from the current stop position with 4 axes specified with the positioning command of the PLC program is executed.

Servo instruction	Positioning method	Number of control axes	Items are set in peripheral devices																							Speed change
			Common							Arc			Parameter block											Others		
			Parameter block No.	Axis	Address/travel value	Command speed	Dwell time	M-code	Torque limit value	Auxiliary point	Radius	Central point	Control unit	Speed limit value	Acceleration time	Deceleration time	Rapid stop deceleration time	Torque limit value	Deceleration processing on stop input	Allowable error range for circular interpolation	S-curve ratio	Cancel	WAIT-ON/OFF	
ABS-4	Absolute	4	△	○	○	○	△	△					△	△	△	△	△	△	△		△	△		Valid
INC-4	Incremental																							

○: Must be set
△ : Set if required

[Control details]

Positioning control which starts and completes the 4 axes simultaneously is executed.

Example

4 axes linear interpolation

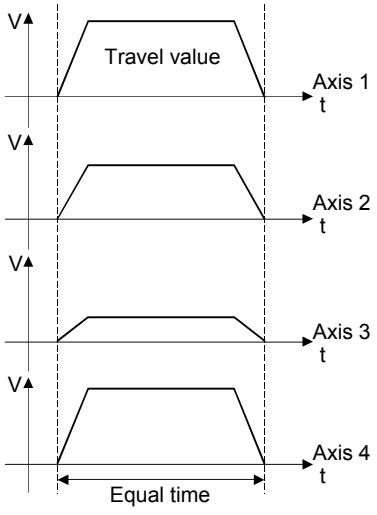

[Program]

Program for 4 axes linear interpolation control is shown as the following conditions.

(1) System configuration

4 axes linear interpolation control of Axis 1, Axis 2, Axis 3 and Axis 4.

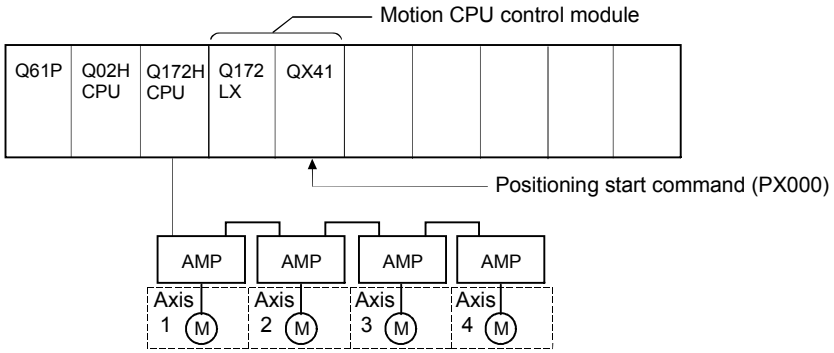

(2) Positioning operation details

The positioning is used the Axis 1, Axis 2, Axis 3 and Axis 4 servomotors.

The positioning by the Axis 1, Axis 2, Axis 3 and Axis 4 servomotors is shown in the diagram below.

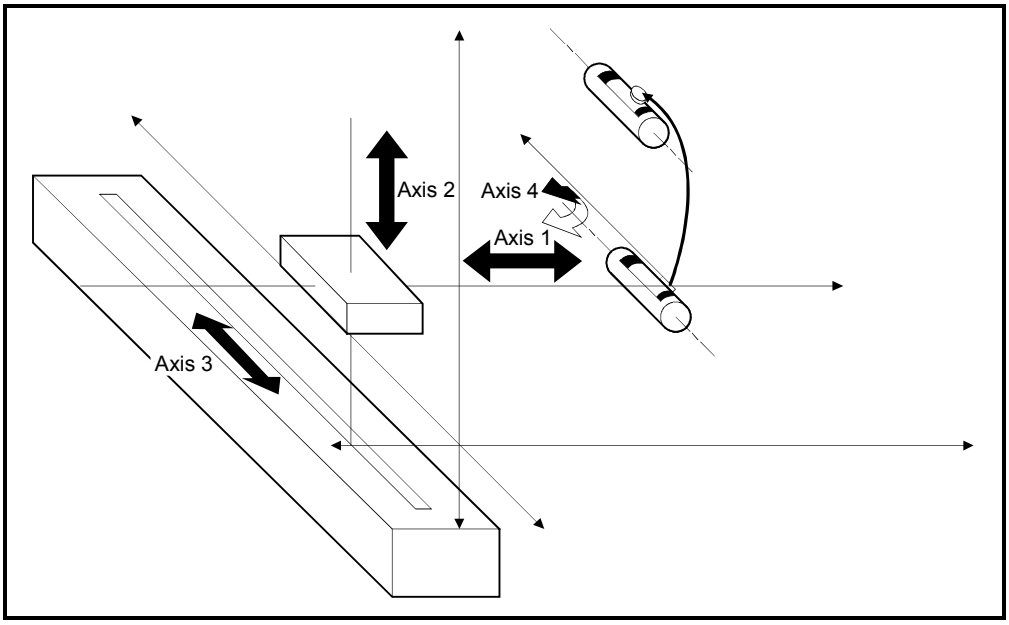

Fig.6.7 Axis configuration

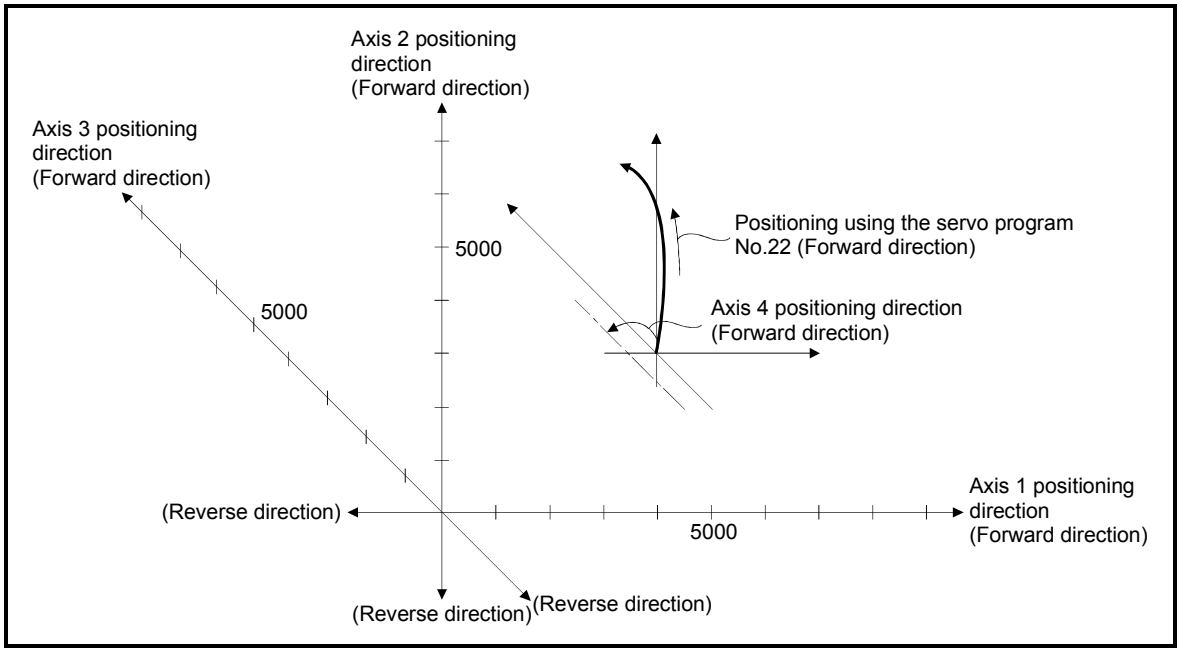

Fig.6.8 Positioning for 4 axes linear interpolation control

(3) Positioning conditions

(a) Positioning conditions are shown below.

Item	Servo Program No.
	No.22
Positioning method	Incremental data method
Positioning speed	10000

(b) Positioning start command ..... Turning PX000 off to on (OFF → ON)

(4) Operation timing

Operation timing for 4 axes linear interpolation control is shown below.

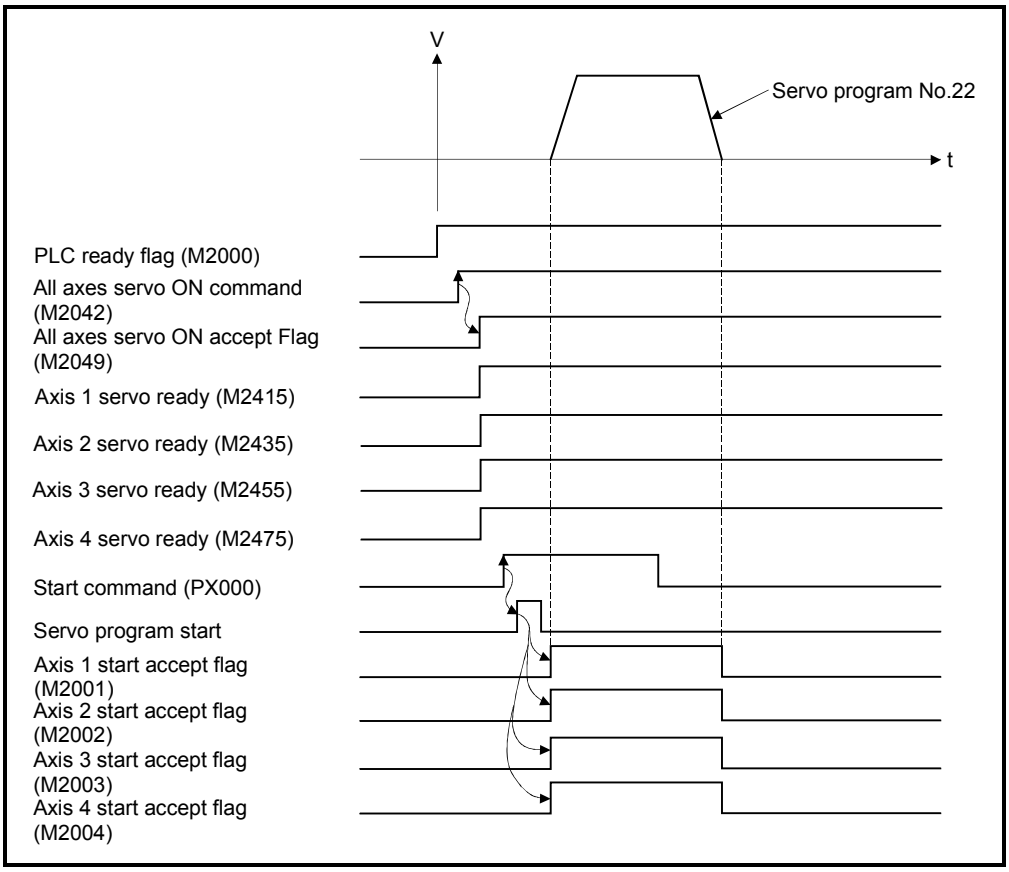

(5) Servo program

Servo program No.22 for 4 axes linear interpolation control is shown below.

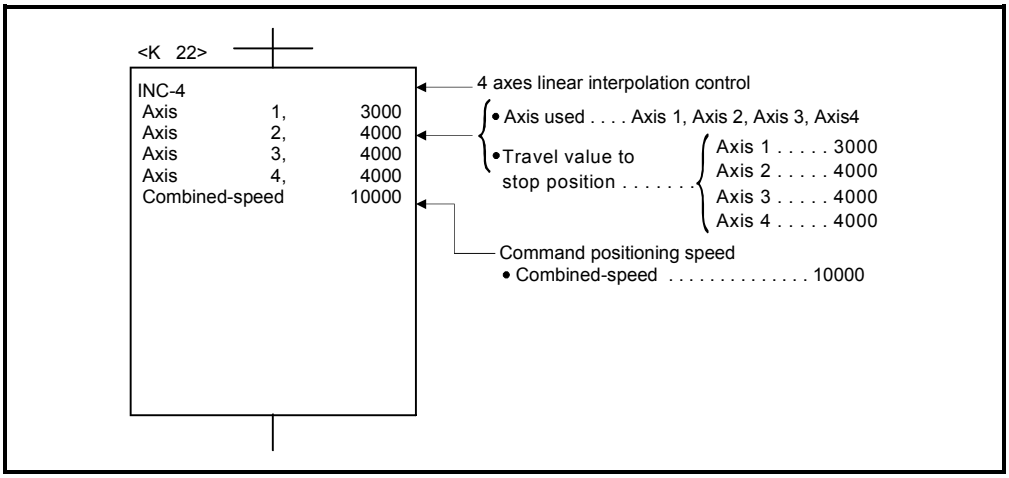

(Note): Example of the Motion SFC program for positioning control is shown next page.

(6) Motion SFC program

Motion SFC program for which executes the servo program is shown below.

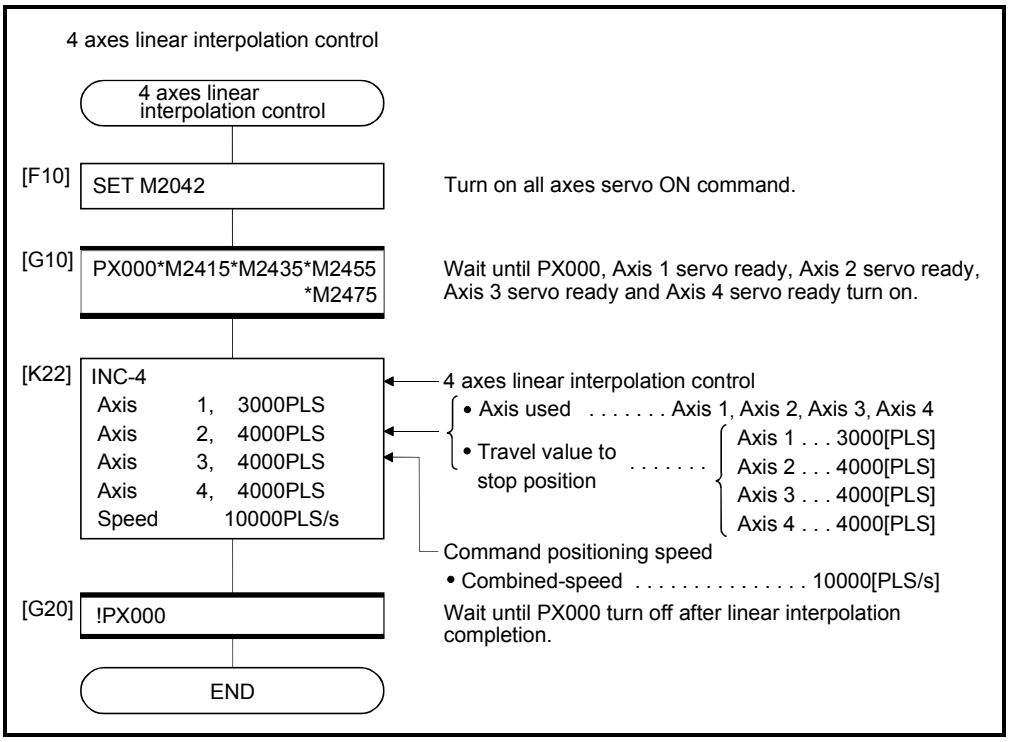

(Note): Example of the above Motion SFC program is started using the automatic start or PLC program.

6.6 Auxiliary Point-Specified Circular Interpolation Control

Circular interpolation control by specification of the end point address and auxiliary point address (a point on the arc) for circular interpolation is executed.
Auxiliary point-specified circular uses ABS⏜ (Absolute data method) and INC⏜ (Incremental data method) servo instructions.

Servo instruction	Positioning method	Number of control axes	Items are set in peripheral devices																							Speed change
			Common							Arc			Parameter block											Others		
			Parameter block No.	Axis	Address/travel value	Command speed	Dwell time	M-code	Torque limit value	Auxiliary point	Radius	Central point	Control unit	Speed limit value	Acceleration time	Deceleration time	Rapid stop deceleration time	Torque limit value	Deceleration processing on stop input	Allowable error range for circular interpolation	S-curve ratio	Cancel	WAT-ON/OFF	
ABS⏜	Absolute	2	△	○	○	○	△	△		○			△	△	△	△	△	△	△	△	△	△		Valid
INC⏜	Incremental																									

○: Must be set
△: Set if required

[Control details]

Control using ABS⏜ (Absolute data method)

(1) Circular interpolation from the current stop address (address before positioning) based on the home position through the specified auxiliary point address to the end point address is executed.

(2) The center of the arc is the point of intersection of the perpendicular bisectors of the start point address (current stop address) to the auxiliary point address, and the auxiliary point address to the end point address.

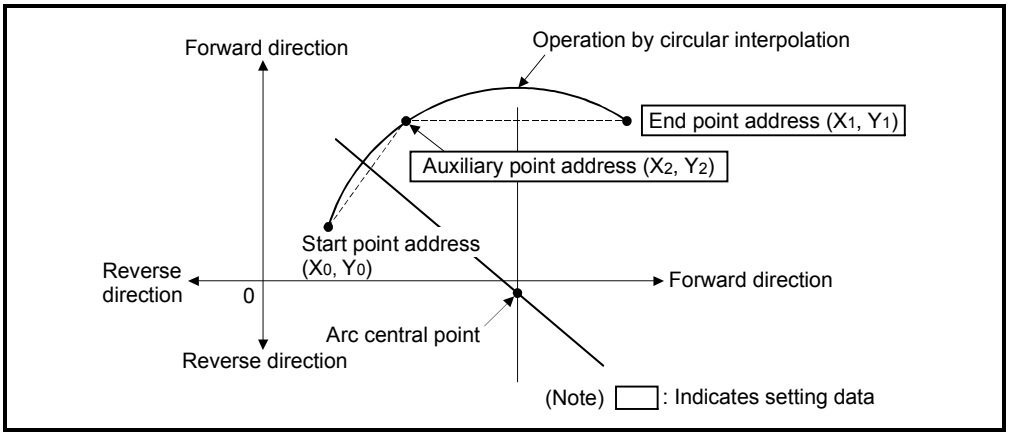

Fig.6.9 Circular interpolation control using absolute data method

(3) The setting range of the end point address and auxiliary point address is (-2^{31}) to (2^{31}-1).

(4) The maximum arc radius is 2^{32}-1.

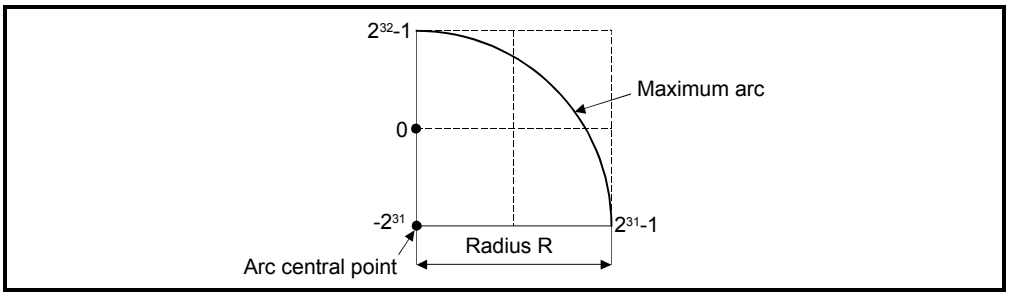

Fig.6.10 Maximum arc

Control using INC (Incremental data method)

(1) Circular interpolation from the current stop address through the specified auxiliary point address to the end point address is executed.

(2) The center of the arc is the point of intersection of the perpendicular bisectors of the start point address (current stop address) to the auxiliary point address, and the auxiliary point address to the end point address.

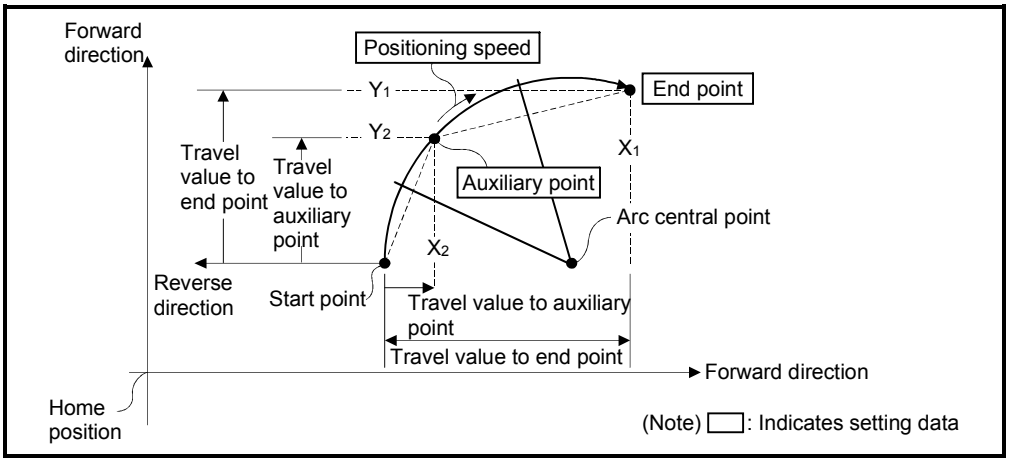

Fig.6.11 Circular interpolation control using incremental data method

(3) The setting range for the travel value to the end point address and auxiliary point address is 0 to ± (2^{31}-1).

(4) The maximum arc radius is 2^{31}-1.
If the end point and auxiliary point are set more than a radius of 2^{31}-1, an error occurs at the start and error code [107] is stored in the data register.

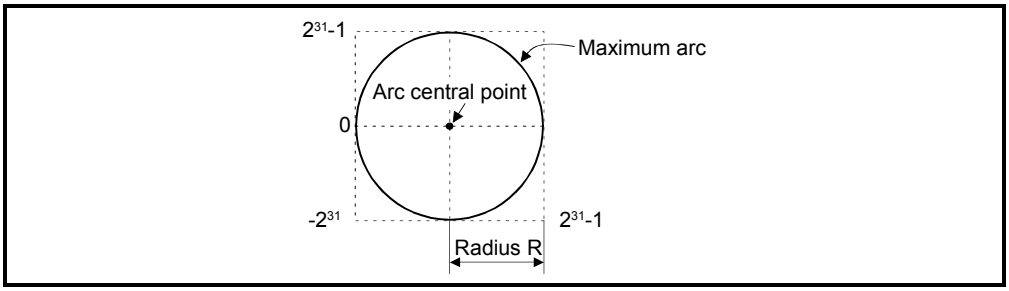

Fig.6.12 Maximum arc

[Program]

Program for auxiliary point-specified circular interpolation control is shown as the following conditions.

(1) System configuration

Auxiliary point-specified circular interpolation control of Axis 1 and Axis 2.

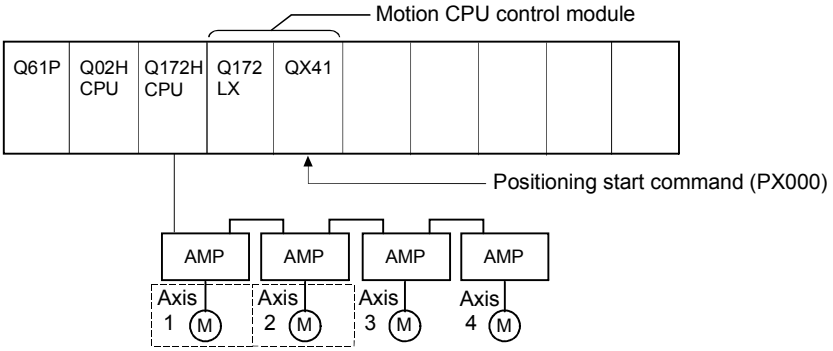

(2) Positioning details

The positioning uses the Axis 1 and Axis 2 servomotors.
The positioning by the Axis 1 and Axis 2 servomotors is shown in the diagram below.

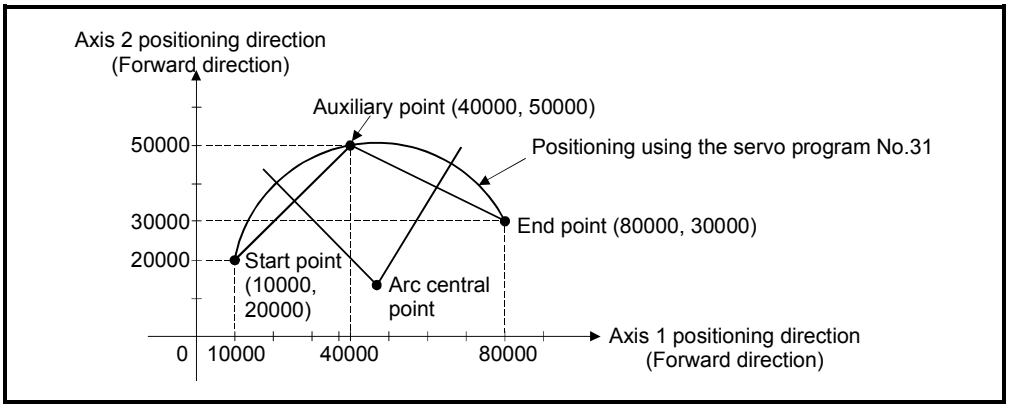

(3) Positioning conditions

(a) Positioning conditions are shown below.

Item	Servo program No.
	No.31
Positioning method	Absolute data method
Positioning speed	1000

(b) Positioning start command ..... Turning PX000 off to on (OFF → ON)

(4) Operation timing

Operation timing for auxiliary point-specified circular interpolation control is shown below.

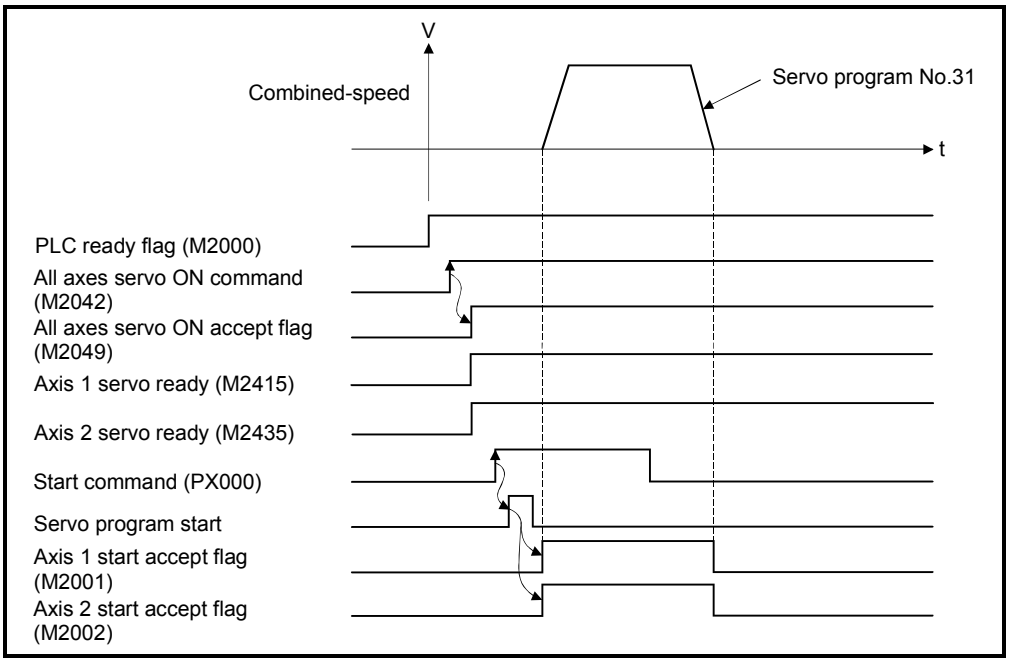

(5) Servo program

Servo program No.31 for auxiliary point-specified circular interpolation control is shown below.

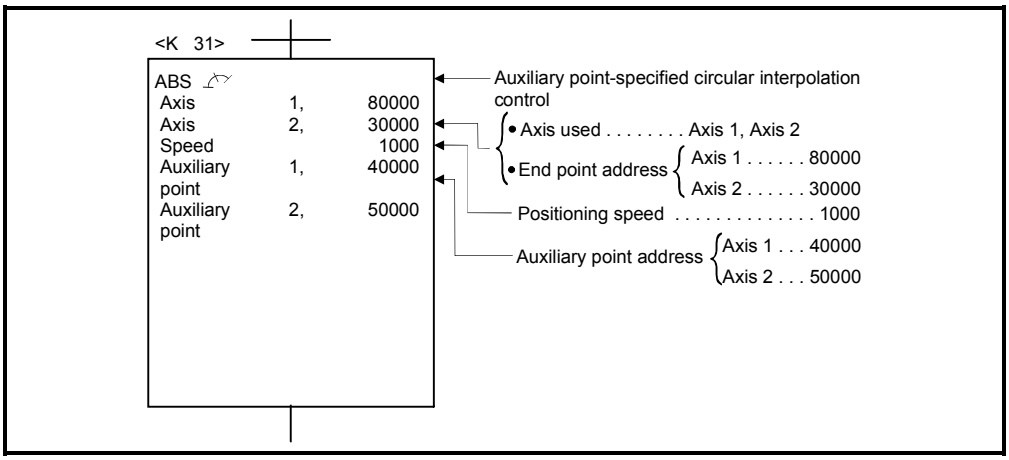

(Note): Example of the Motion SFC program for positioning control is shown next page.

(6) Motion SFC program

Motion SFC program for which executes the servo program is shown below.

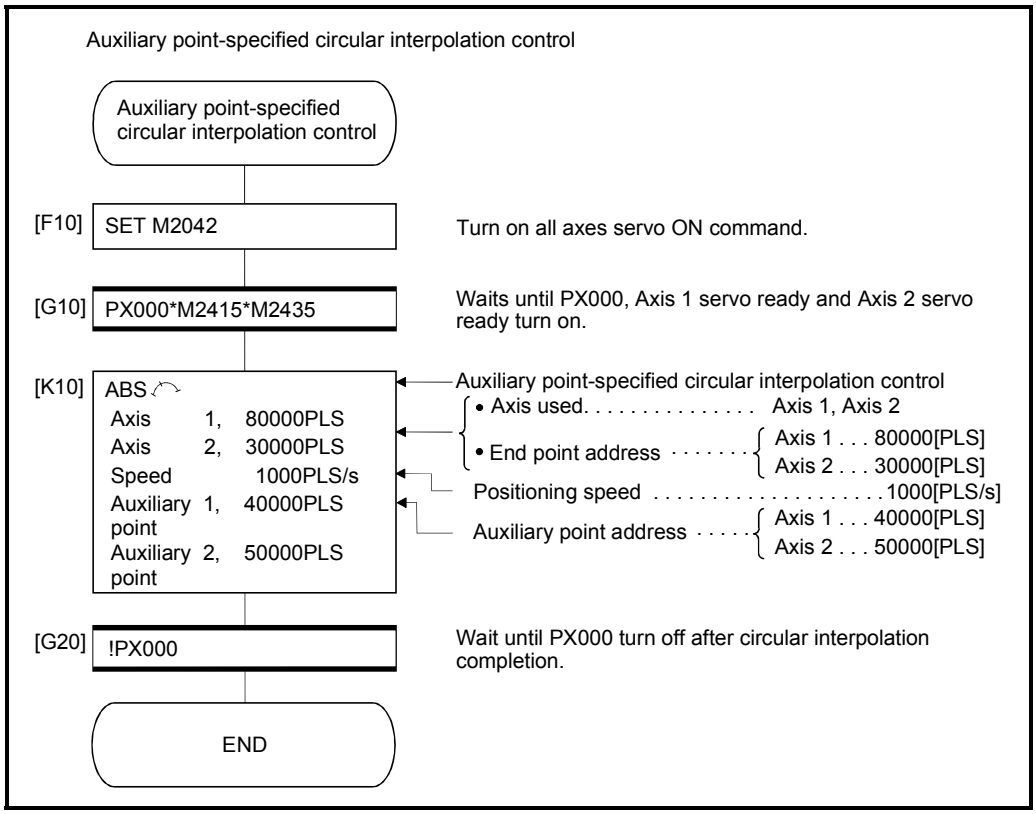

(Note): Example of the above Motion SFC program is started using the automatic start or PLC program.

6.7 Radius-Specified Circular Interpolation Control

Circular interpolation control by specification of the end point address and radius for circular interpolation is executed.
Radius-specified circular interpolation control uses ABS ↷, ABS ↷, ABS ↶ and ABS ↻ (Absolute data method) and INC ↷, INC ↷, INC ↶ and INC ↻ (Incremental data method) servo instructions.

Servo instruction	Positioning method	Number of control axes	Items are set in peripheral devices																							Speed change
			Common							Arc			Parameter block											Others		
			Parameter block No.	Axis	Address/travel value	Command speed	Dwell time	M-code	Torque limit value	Auxiliary point	Radius	Central point	Control unit	Speed limit value	Acceleration time	Deceleration time	Rapid stop deceleration time	Torque limit value	Deceleration processing on stop input	Allowable error range for circular interpolation	S-curve ratio	Cancel	WAIT-ON/OFF	
ABS ↷	Absolute	2	△	○	○	○	△	△			○		△	△	△	△	△	△	△	△	△	△		Valid
ABS ↷																								
ABS ↶																								
ABS ↻																								
INC ↷	Incremental																							
INC ↷																								
INC ↶																								
INC ↻																								

○: Must be set
△: Set if required

[Control details]

Details for the servo instructions are shown in the table below.

Instruction	Rotation direction of the servomotors	Maximum controllable angle of arc	Positioning path
ABS INC	Clockwise	0° < θ < 180°	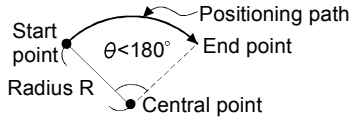
ABS INC	Counter clockwise		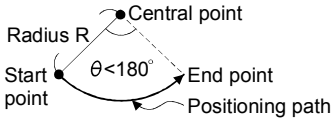
ABS INC	Clockwise	180° ≦ θ < 360°	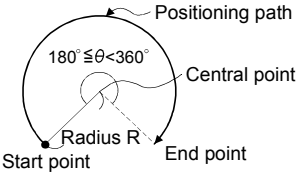
ABS INC	Counter clockwise		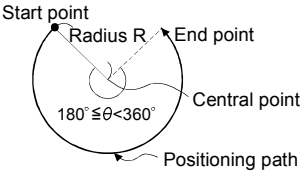

Control using ABS ↶, ABS ↷, ABS ↶, ABS ↷ (Absolute data method)

(1) Circular interpolation from the current stop address (address before positioning) based on the home position to the specified end address with the specified radius is executed.

(2) The center of the arc is the point of intersection of the perpendicular bisectors of the start point address (current stop address) to the end address.

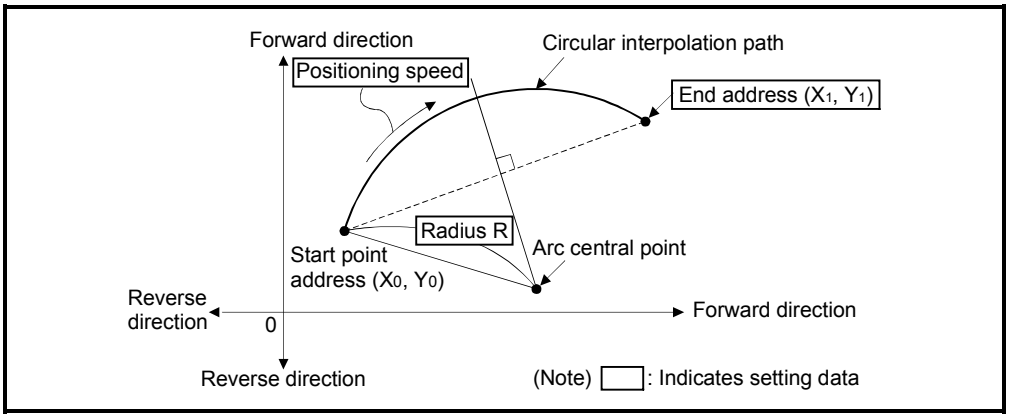

Fig.6.13 Circular interpolation control using absolute data method

(3) The setting range of end point address is (-2^{31}) to $(2^{31}-1)$.

(4) The setting range for the radius is 1 to (2^{31}-1).

(5) The maximum arc radius is (2^{32}-1).

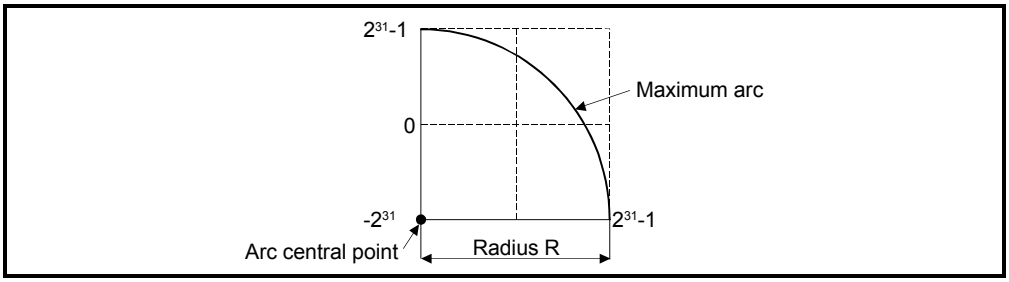

Fig.6.14 Maximum arc

Control using INC ↶, INC ↷, INC ↺, INC ↻ (Incremental data method)

(1) Circular interpolation from the current stop address (0, 0) to the specified end point with specified radius.

(2) The center of the arc is the point of intersection of the perpendicular bisectors of the start point address (current stop address) to the end address.

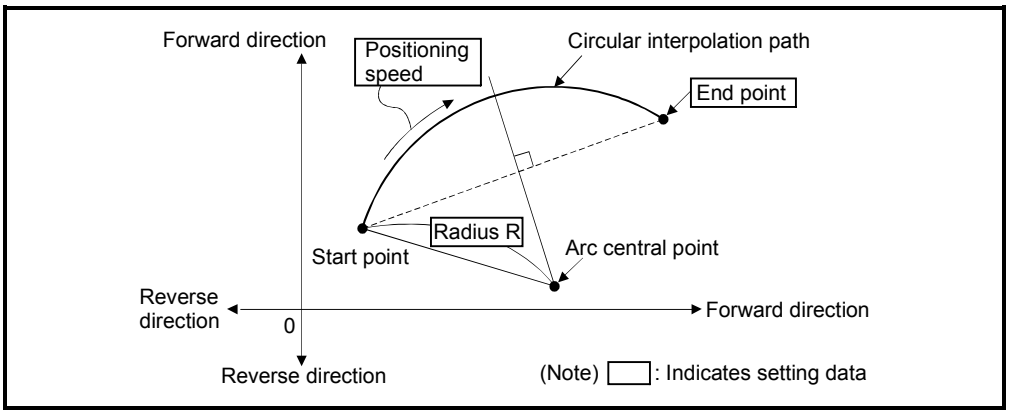

Fig.6.15 Circular interpolation control using incremental data method

(3) Setting range of end point address is (-2^{31}) to (2^{31}-1).

(4) Setting range of radius is 1 to (2^{31}-1).

(5) Maximum arc radius is (2^{31}-1).

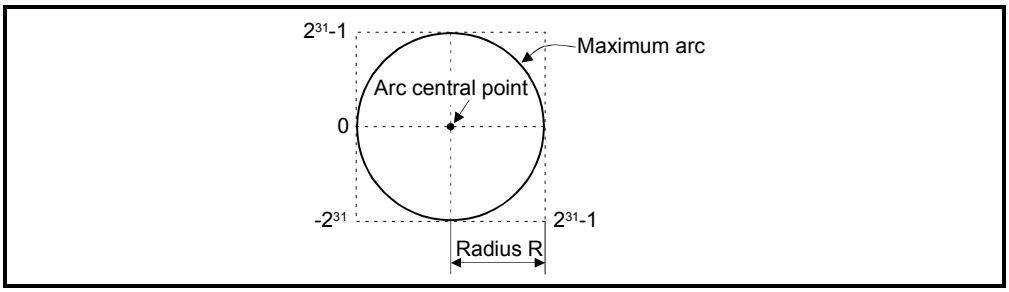

Fig.6.16 Maximum arc

[Program]

Program for radius-specified circular interpolation control is shown as the following conditions.

(1) System configuration

Radius-specified circular interpolation control of Axis 1 and Axis 2.

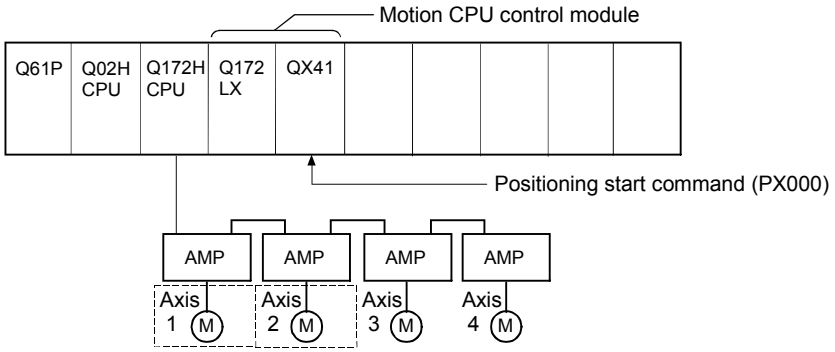

(2) Positioning operation details

The positioning uses the Axis 1 and Axis 2 servomotors.

The positioning by the Axis 1 and Axis 2 servomotors is shown in the diagram below.

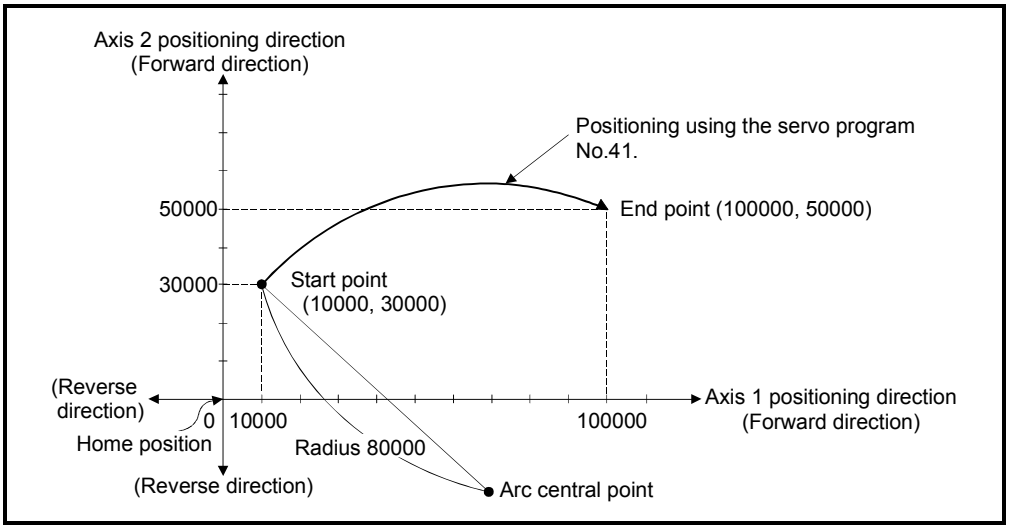

(3) Positioning conditions

(a) Positioning conditions are shown below.

Item	Servo Program No.
	No.41
Positioning method	Absolute data method
Positioning speed	1000

(b) Positioning start command ..... Turning PX000 off to on (OFF → ON)

(4) Operation timing

Operation timing for radius-specified circular interpolation control is shown below.

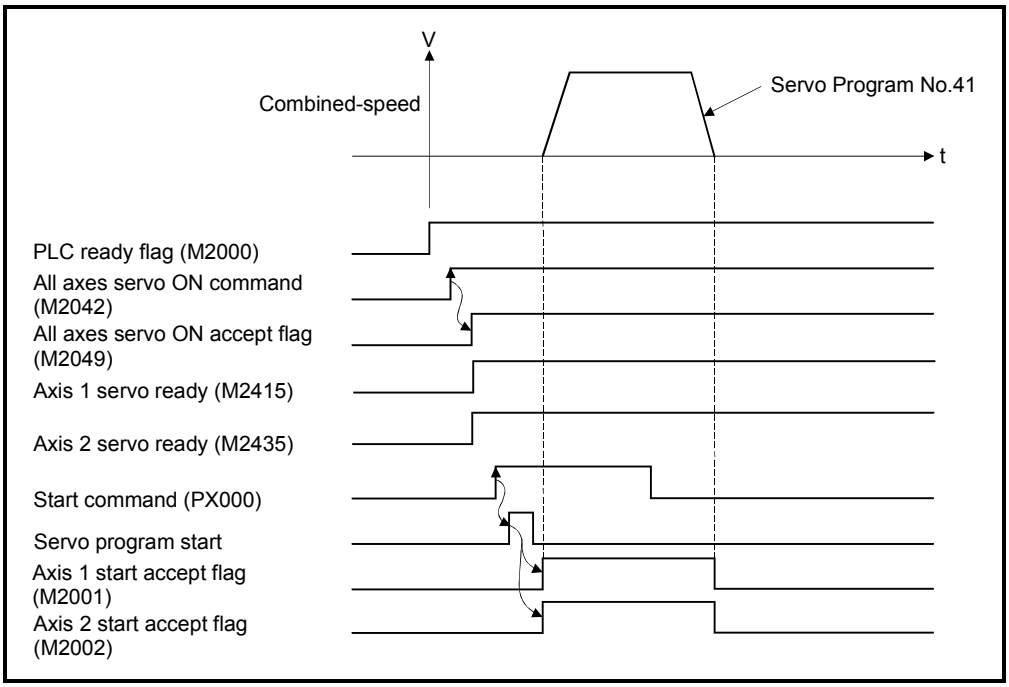

(5) Servo program

Servo program No.41 for radius-specified circular interpolation control is shown below.

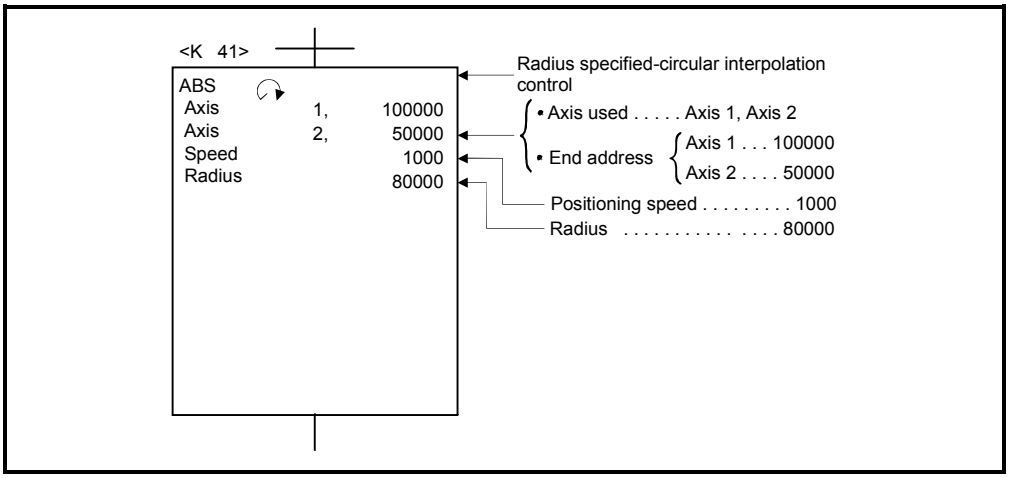

(Note): Example of the Motion SFC program for positioning control is shown next page.

(6) Motion SFC program

Motion SFC program for which executes the servo program is shown below.

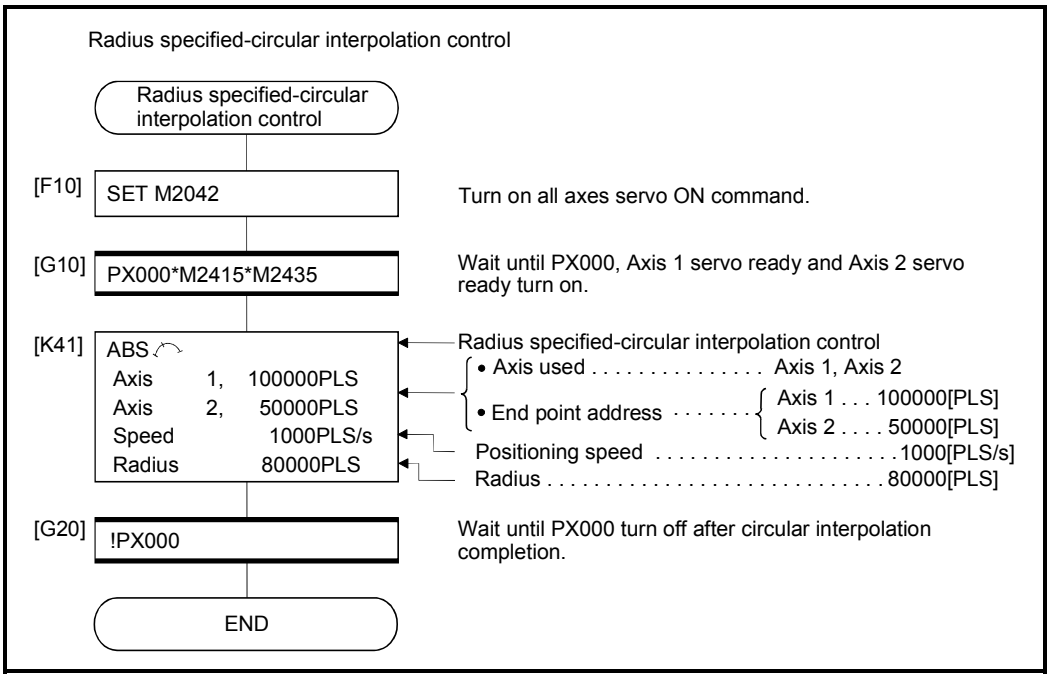

(Note): Example of the above Motion SFC program is started using the automatic start or PLC program.

6.8 Central Point-Specified Circular Interpolation Control

Circular interpolation control by specification of the end point for circular interpolation and arc central point is executed.
Central point-specified circular interpolation control uses ABS ↷ and ABS ↶ (Absolute data method) and INC ↷ and INC ↶ (Incremental data method) servo instructions.

Servo instruction	Positioning method	Number of control axes	Items are set in peripheral devices																							Speed change
			Common							Arc			Parameter block											Others		
			Parameter block No.	Axis	Address/travel value	Command speed	Dwell time	M-code	Torque limit value	Auxiliary point	Radius	Central point	Control units	Speed limit value	Acceleration time	Deceleration time	Rapid stop deceleration time	Torque limit value	Deceleration processing on stop input	Allowable error range for circular interpolation	S-curve ratio	Cancel	WAIT-ON/OFF		
ABS ↷	Absolute	2	△	○	○	○	△	△				○	△	△	△	△	△	△	△	△	△	△			Valid
ABS ↶																									
INC ↷	Incremental																								
INC ↶																									

○: Must be set
△: Set if required

[Control details]

Details for the servo instructions are shown in the table below.

Instruction	Rotation direction of the servomotors	Maximum controllable angle of arc	Positioning path
ABS ↷	Clockwise	0° < θ < 360°	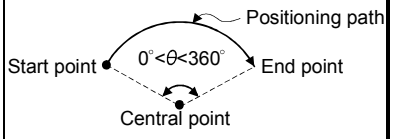
INC ↷			
ABS ↶	Counter clockwise		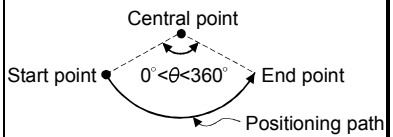
INC ↶			

Control using ABS ↷, ABS ↶ (Absolute data method)

(1) Circular interpolation of an arc with a radius equivalent to the distance between the start point and central point, between the current stop address (address before positioning) based on the home position and the specified end point address.

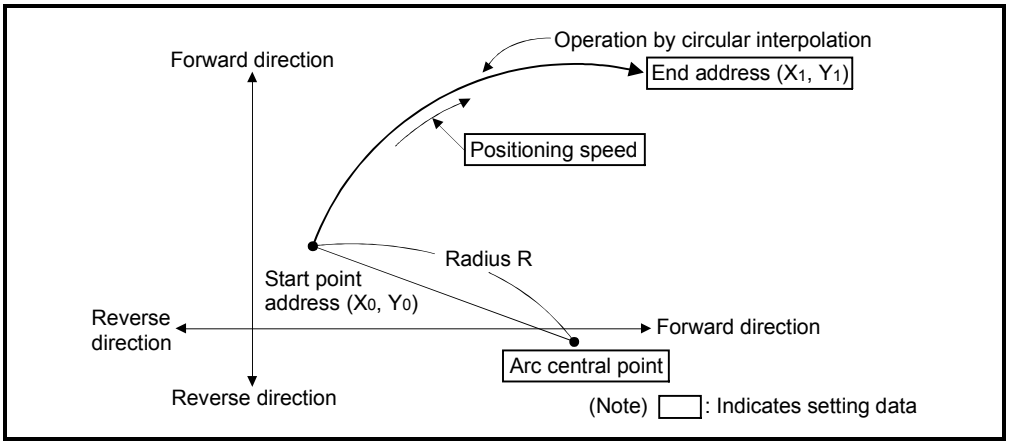

Fig.6.17 Circular interpolation control using absolute date method

(2) Positioning control of a complete round is possible in the central point-specified circular interpolation control.

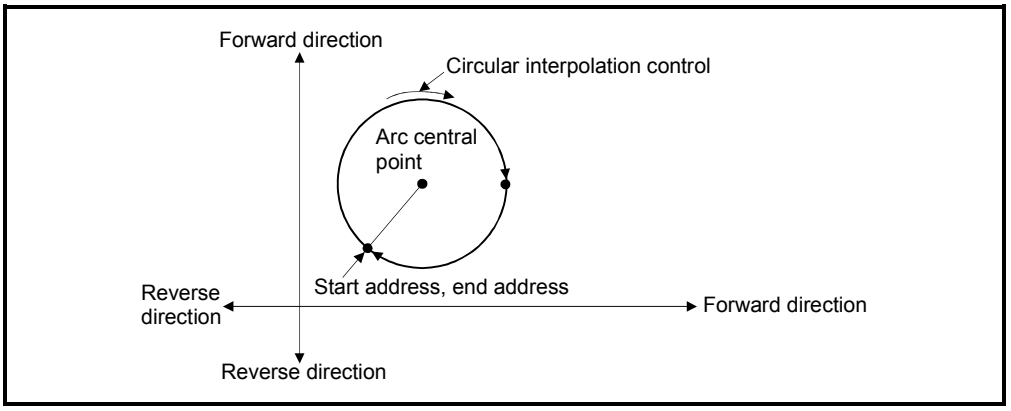

Fig.6.18 Positioning control of a complete round

(3) Setting range of end point address and arc central point is (-2^{31}) to (2^{31}-1).

(4) The maximum arc radius is (2^{32}-1).

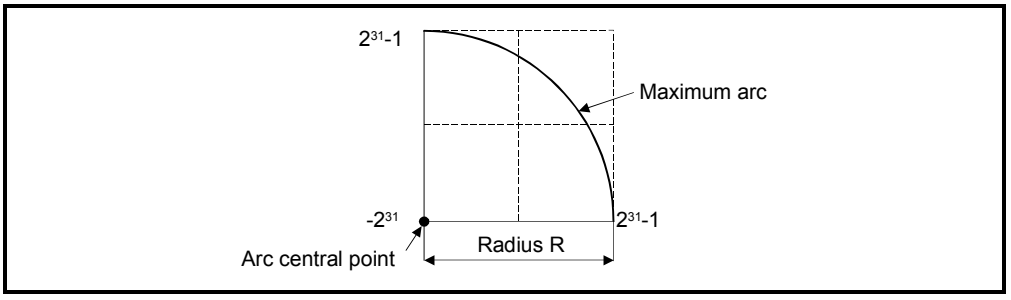

Fig.6.19 Maximum arc

Control using INC ↷, INC ↶ (Incremental method)

(1) Circular interpolation from the current stop address (0, 0) with a radius equivalent to the distance between the start point (0, 0) and central point.

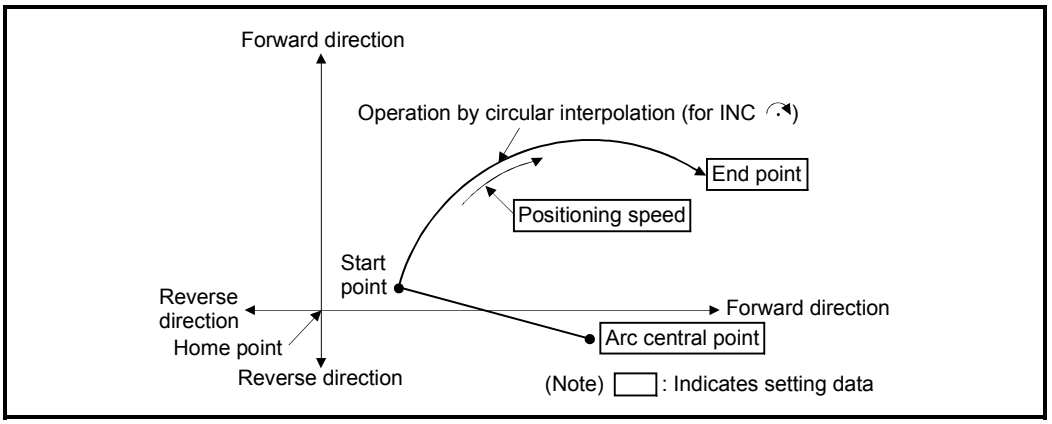

Fig.6.20 Circular interpolation control using incremental data method (INC ↷)

(2) Positioning control of a complete round is possible in the central point-specified circular interpolation control.

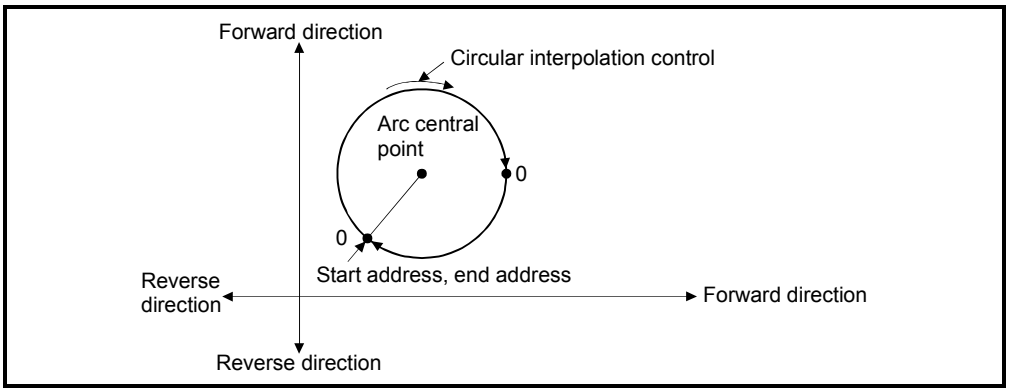

Fig.6.21 Positioning control of a complete round

(3) Setting range of travel value to end point address and arc central point is 0 to (2^{31}-1).

(4) The maximum arc radius is (2^{31}-1).
If the end point and central point are set more than a radius of (2^{31}-1), an error occurs at the start and error code [109] is stored in the data register.

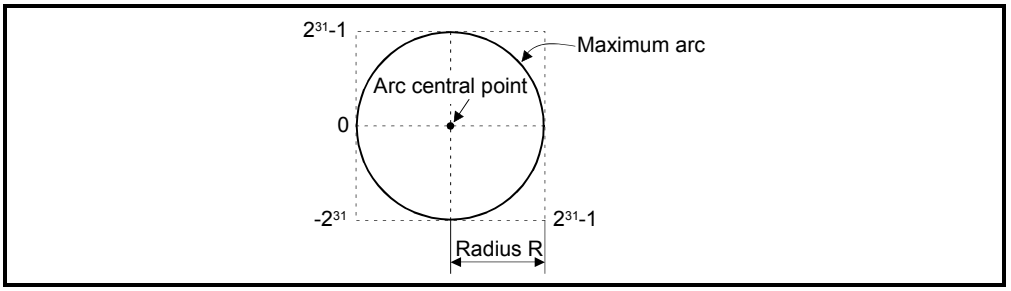

Fig.6.22 Maximum arc radius

[Program]

Program for central point-specified circular interpolation control is shown as the following conditions.

(1) System configuration

Central point-specified circular interpolation control of Axis 1 and Axis 2.

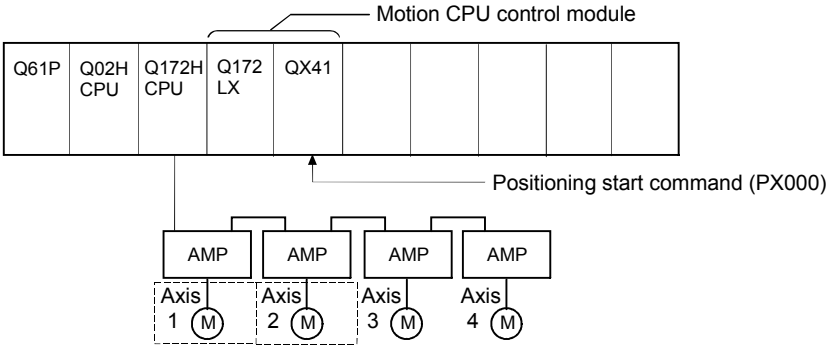

(2) Positioning operation details

The positioning uses the Axis 1 and Axis 2 servomotors.

The positioning by the Axis 1 and Axis 2 servomotors is shown in the diagram below.

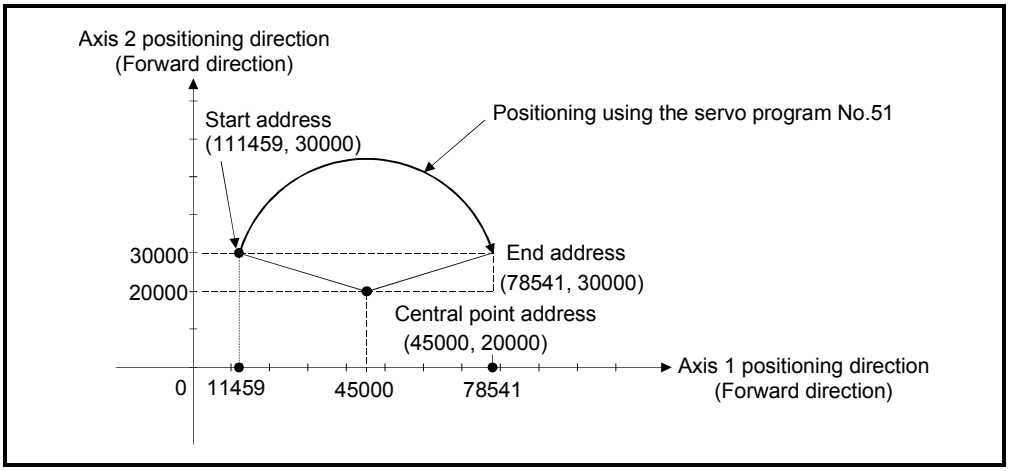

(3) Positioning conditions

(a) Positioning conditions are shown below.

Item	Servo Program No.
	No.51
Positioning method	Absolute data method
Positioning speed	1000

(b) Positioning start command ..... Turning PX000 off to on (OFF → ON)

(4) Operation timing

Operation timing for central point-specified circular interpolation is shown below.

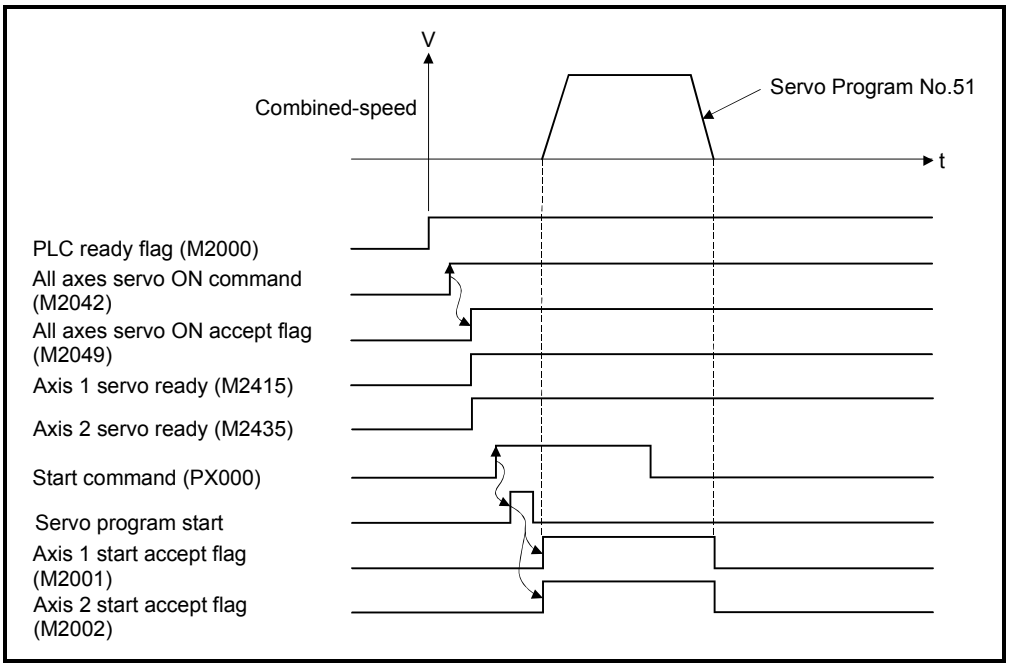

(5) Servo program

Servo program No.51 for central point-specified circular interpolation is shown below.

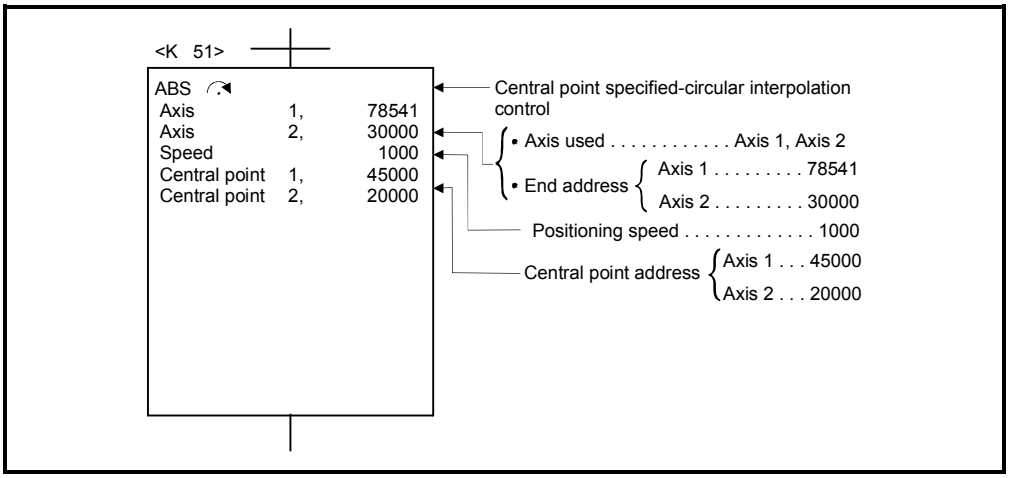

(Note): Example of the Motion SFC program for positioning control is shown next page.

(6) Motion SFC program

Motion SFC program for which executes the servo program is shown below.

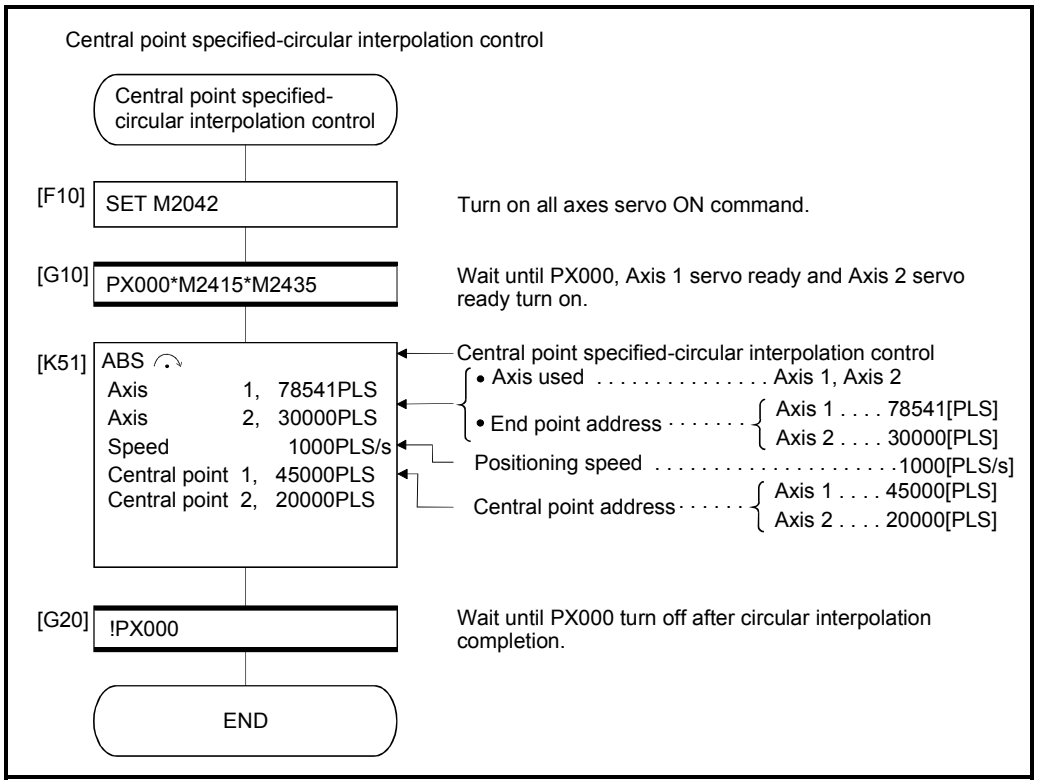

(Note): Example of the above Motion SFC program is started using the automatic start or PLC program.

6.9 Helical Interpolation Control

The linear interpolation control with linear axis is executed simultaneously while the circular interpolation specified with any 2 axes is executed, the specified number of pitches rotates spirally and performs the locus control to command position.

Servo instruction	Processing	Number of control axes	Items are set in peripheral devices																								Speed change
			Common							Arc				Parameter block											Others		
			Parameter block No.	Axis	Address/travel value	Command speed	Dwell time	M-code	Torque limit value	Auxiliary point	Radius	Central point	Pitch count	Control units	Speed limit value	Acceleration time	Deceleration time	Rapid stop deceleration time	Torque limit value	Deceleration processing on stop input	Allowable error range for circular interpolation	S-curve ratio	Cancel	WAIT-ON/OFF	
ABH	Absolute radius-specified helical interpolation less than CW 180°	3	△	○	○	○	△	△			○		○	△	△	△	△	△	△	△		△	△		Valid
ABH	Absolute radius-specified helical interpolation CW 180° or more	3	△	○	○	○	△	△			○		○	△	△	△	△	△	△	△		△	△		
ABH	Absolute radius-specified helical interpolation less than CCW 180°	3	△	○	○	○	△	△			○		○	△	△	△	△	△	△	△		△	△		
ABH	Absolute radius-specified helical interpolation CCW 180° or more	3	△	○	○	○	△	△			○		○	△	△	△	△	△	△	△		△	△		
INH	Incremental radius-specified helical interpolation less than CW 180°	3	△	○	○	○	△	△			○		○	△	△	△	△	△	△	△		△	△		
INH	Incremental radius-specified helical interpolation CW 180° or more	3	△	○	○	○	△	△			○		○	△	△	△	△	△	△	△		△	△		
INH	Incremental radius-specified helical interpolation less than CCW 180°	3	△	○	○	○	△	△			○		○	△	△	△	△	△	△	△		△	△		
INH	Incremental radius-specified helical interpolation CCW 180° or more	3	△	○	○	○	△	△			○		○	△	△	△	△	△	△	△		△	△		
ABH	Absolute central point-specified helical interpolation CW	3	△	○	○	○	△	△				○	○	△	△	△	△	△	△	△		△	△		
ABH	Absolute central point-specified helical interpolation CCW	3	△	○	○	○	△	△				○	○	△	△	△	△	△	△	△		△	△		
INH	Incremental central point-specified helical interpolation CW	3	△	○	○	○	△	△				○	○	△	△	△	△	△	△	△		△	△		
INH	Incremental central point-specified helical interpolation CCW	3	△	○	○	○	△	△				○	○	△	△	△	△	△	△	△		△	△		
ABH	Absolute auxiliary point- specified helical interpolation	3	△	○	○	○	△	△		○			○	△	△	△	△	△	△	△		△	△		
INH	Incremental auxiliary point-specified helical interpolation	3	△	○	○	○	△	△		○			○	△	△	△	△	△	△	△		△	△		

○: Must be set
△: Set if required

6.9.1 Circular interpolation specified method by helical interpolation

The following method of circular interpolation is possible for the helical interpolation. The specified method of circular interpolation connected start point and end point at the seeing on the plane for which performs circular interpolation are as follows.

Servo instruction	Positioning method	Circular interpolation specified method
ABH	Absolute	Radius-specified method less than CW180°
INH	Incremental	
ABH	Absolute	Radius-specified method less than CCW180°
INH	Incremental	
ABH	Absolute	Radius-specified method CW180° or more.
INH	Incremental	
ABH	Absolute	Radius-specified method CCW180° or more.
INH	Incremental	
ABH	Absolute	Central point-specified method CW
INH	Incremental	
ABH	Absolute	Central point- specified method CCW
INH	Incremental	
ABH	Absolute	Auxiliary point-specified method
INH	Incremental	

[Cautions]

(1) The helical interpolation instruction can be used at the both of real/virtual mode.

(2) When the number of pitches is 0 and travel value of linear axis is not "0" is set, operation example is shown below.

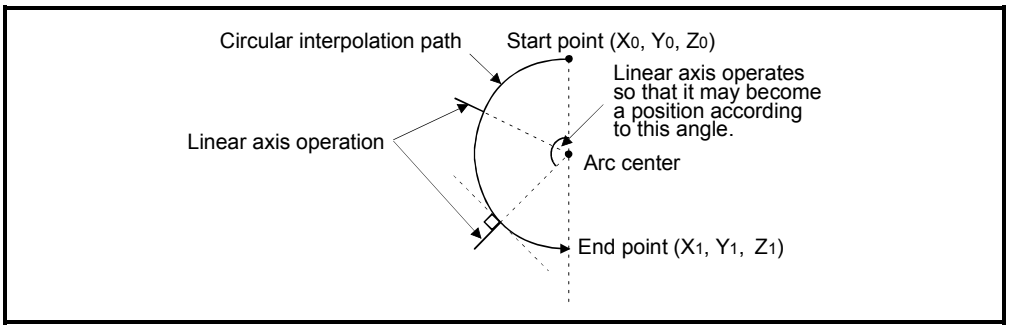

Condition	Operation
Number of pitches is 0	Control on the circular plane.
Number of pitches is not 0	Rotation spirally of the number of pitches to linear axis direction.

(3) When the travel value of linear axis is "0" is set, it can be controlled.

Condition	Operation
Number of pitches is 0	Same control as normal circular interpolation control. (Allowable error range for circular interpolation can be set.)
Number of pitches is not 0	Linear interpolation to linear axis does not executed, circle for the number of pitches is drawn on the circle plane. (Allowable error range for circular interpolation can be set.)

(4) Units for linear axis have not restrictions.

(5) Circular interpolation axis has the following restrictions.
- When the unit of one axis is [degree] axis (with stroke range), set another axis also as [degree] axis (without stroke range).
- The axis of [degree] unit as without stroke range cannot be set.
- The axis as without stroke range cannot be set in the virtual mode.

(6) Specified the speed which executes speed change by CHGV instruction during helical interpolation operation with the combined-speed of circular interpolation axis 2. If speed change is requested by specifying negative speed by CHGV instruction during helical interpolation operation, deceleration starts from the time and it is possible to return to reverse direction at the deceleration completion.

(7) If start point = end point, number of pitches = 1 and travel value of linear axis = 0, at the only central point-specified circular interpolation, full circle can be drawn. when the address of "start point = end point" is set at the radius-specified helical interpolation or auxiliary point-specified helical interpolation, a minor error (error code [108]) occurs at the start and cannot be start.

(8) When the control unit is [degree] and the stroke limit is invalid, if the helical interpolation control is executed using absolute data method, positioning in near direction to specified address based on the current value.

(9) Allowable error range for circular interpolation can be set.

ABH ↶, ABH ↷, ABH ↶, ABH ↷ Absolute radius-specified helical interpolation control

[Control details]

The linear interpolation to other linear axis is executed performing 2 axes circular interpolation from current stop position (X0, Y0, Z0) to specified circular end address (X1, Y1) or linear axis end point address (Z1), and the absolute helical interpolation is executed so that it may become a spiral course.
It goes around on the specified circle for the specified number of pitches, the circular interpolation which had remainder specified is executed, and positioning to end address is executed. The radius-specified circle specifies circular interpolation method connected start point and end point at the seeing on the plane for which performs circular interpolation.

Operation details for absolute radius-specified helical interpolation are shown below.

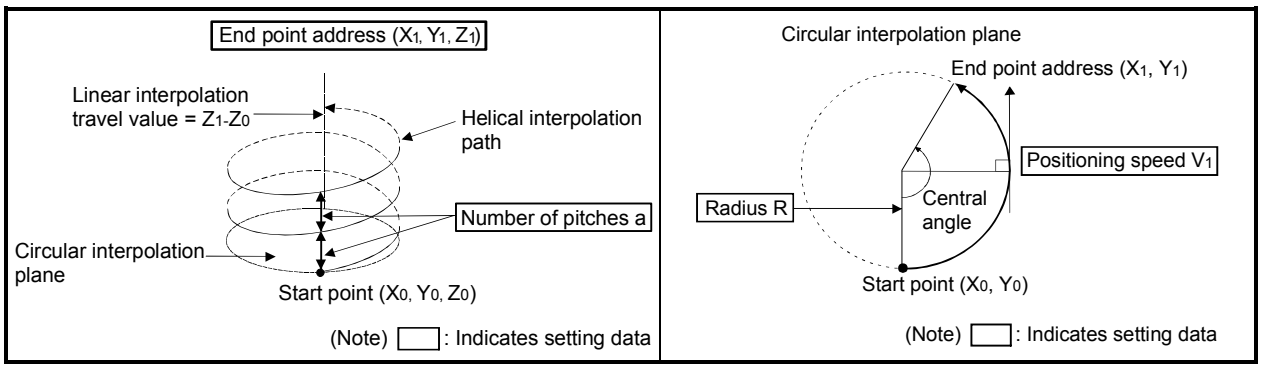

Control details for the servo instructions are shown below.

Instruction	Rotation direction of servomotor	Controllable angle of arc	Positioning pass
ABH ↶ Radius-specified helical interpolation less than CW 180°	Clockwise (CW)	0° < θ < 180°	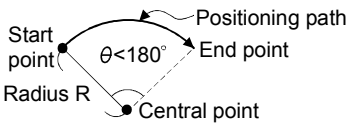
ABH ↷ Radius-specified helical interpolation less than CCW 180°	Counter clockwise (CCW)		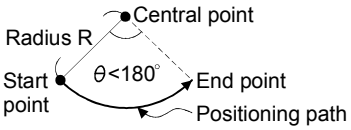
ABH ↶ Radius-specified helical interpolation CW 180° or more	Clockwise (CW)	180° ≦ θ ≦ 360°	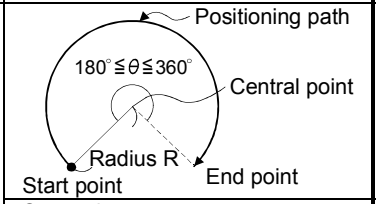
ABH ↷ Radius-specified helical interpolation CCW 180° or more	Counter clockwise (CCW)		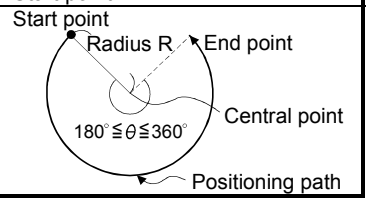

(1) The setting range of end point address for the both of circular interpolation axis and linear interpolation axis is (-2^{31}) to (2^{31}-1).

(2) The maximum arc radius on the circular interpolation plane is (2^{31}-1).
For example, the maximum arc radius for electronic gear 1:1 of unit [mm] is 214748364.7[μm].

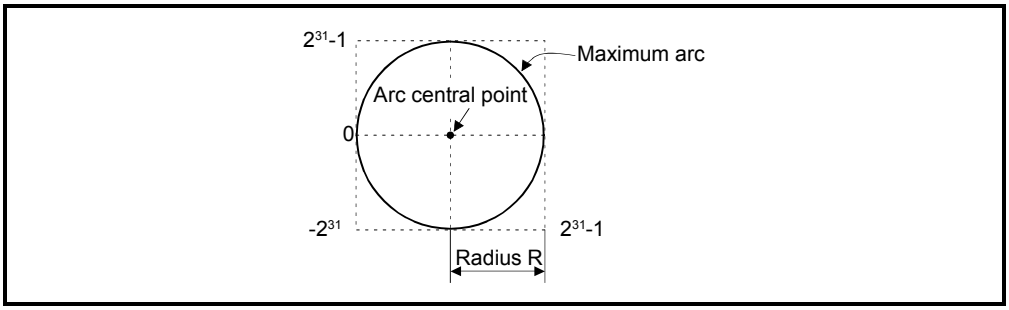

(3) Set the command speed with the combined-speed for 2 axes circular interpolation axis.

(4) The command speed unit is specified in the parameter block.

(5) Set the number of pitches within the range of 0 to 999. If it is set outside the setting range, the servo program error [28] occurs, and cannot be started.

(6) All of the circular interpolation axis, linear axis and point address, command speed, radius (2 word data above) and number of pitches (1 word data) are set indirectly by D, W and #.

[Program]

(1) Servo program

Servo program No.52 for absolute radius-specified helical interpolation control is shown below.

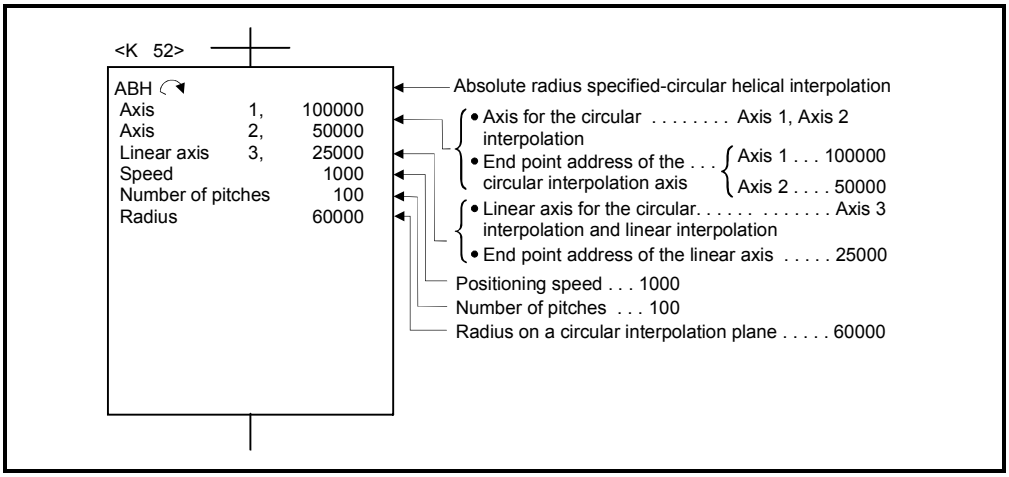

(Note): Example of the Motion SFC program for positioning control is shown next page.

(2) Motion SFC program

Motion SFC program for which executes the servo program is shown below.

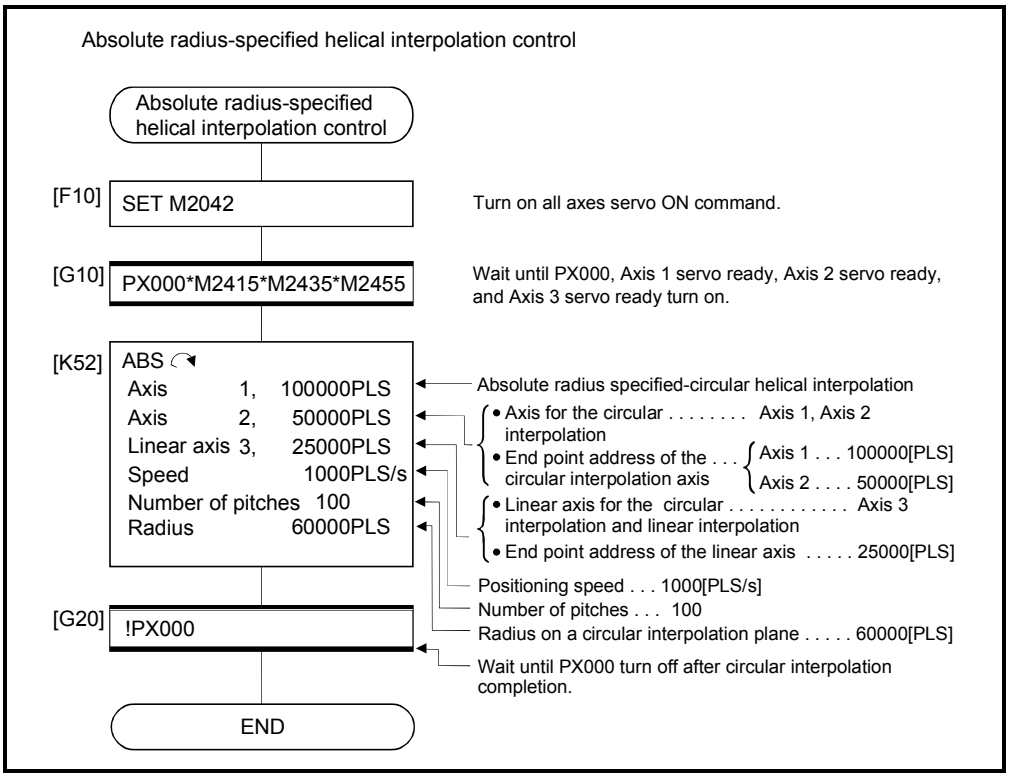

(Note): Example of the above Motion SFC program is started using the automatic start or PLC program.

INH ↷, INH ↶, INH ↷, INH ↶ Incremental radius-specified helical interpolation control

[Control details]

The linear interpolation to other linear axis is executed performing circular interpolation from current stop position (start point) to specified circular relative end address (X1, Y1) or linear axis end point relative address (Z1), and the incremental helical interpolation control is executed so that it may become a spiral course.
It goes around on the specified circle for the specified number of pitches, the circular interpolation which had remainder specified is executed, and positioning to end address is executed. The radius-specified circle specifies circular interpolation method connected start point and end point at the seeing on the plane for which performs circular interpolation.

Operation details for incremental radius-specified helical interpolation are shown below.

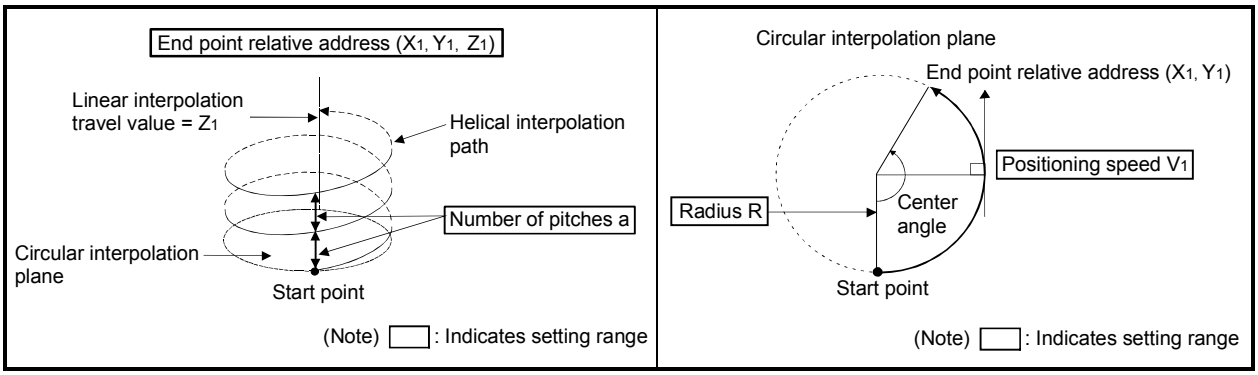

Control details for the servo instructions are shown below.

Instruction	Rotation direction of servomotor	Controllable angle of arc	Positioning pass
INH Radius-specified helical interpolation less than CW 180°	Clockwise (CW)	0° < θ < 180°	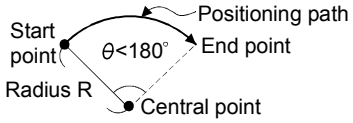
INH Radius-specified helical interpolation less than CCW 180°	Counter clockwise (CCW)		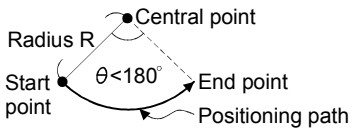
INH Radius-specified helical interpolation CW 180° or more	Clockwise (CW)	180° ≦ θ ≦ 360°	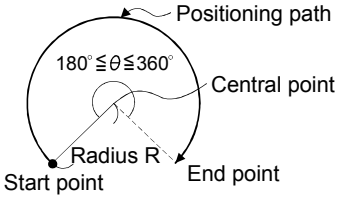
INH Radius-specified helical interpolation CCW 180° or more	Counter clockwise (CCW)		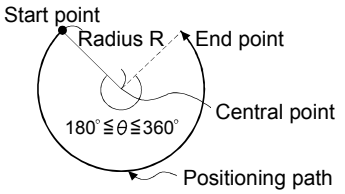

(1) The setting range of end point relative address for the both of circular interpolation axis and linear interpolation axis is 0 to ± (2^{31}-1).
The travel direction is set by the sign (+/ -) of the travel value, as follows:
• Positive travel value .....Positioning control to forward direction
(Address increase direction)
• Negative travel value.....Positioning control to reverse direction
(Address decrease direction)

(2) The maximum arc radius on the circular interpolation plane is 2^{31}-1.
For example, the maximum arc radius for electronic gear 1:1 of unit [mm] is 214748364.7[μm].

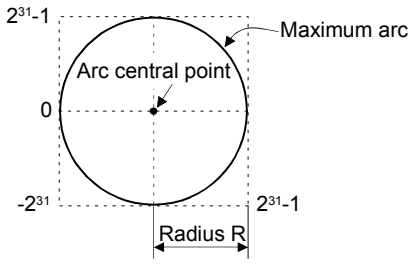

(3) Set the command speed with the combined-speed for 2 axes circular interpolation axis.

(4) The command speed unit is specified in the parameter block.

(5) Set the number of pitches within the range of 0 to 999. If it is set outside the setting range, the servo program error [28] occurs and operation does not start.

(6) All of the circular interpolation axis, linear axis end point relative address, command speed, radius (2 word data above) and number of pitches (1 word data) are set indirectly by D, W and #.

[Program]

(1) Servo program

Servo program No.53 for incremental radius-specified helical interpolation control is shown below.

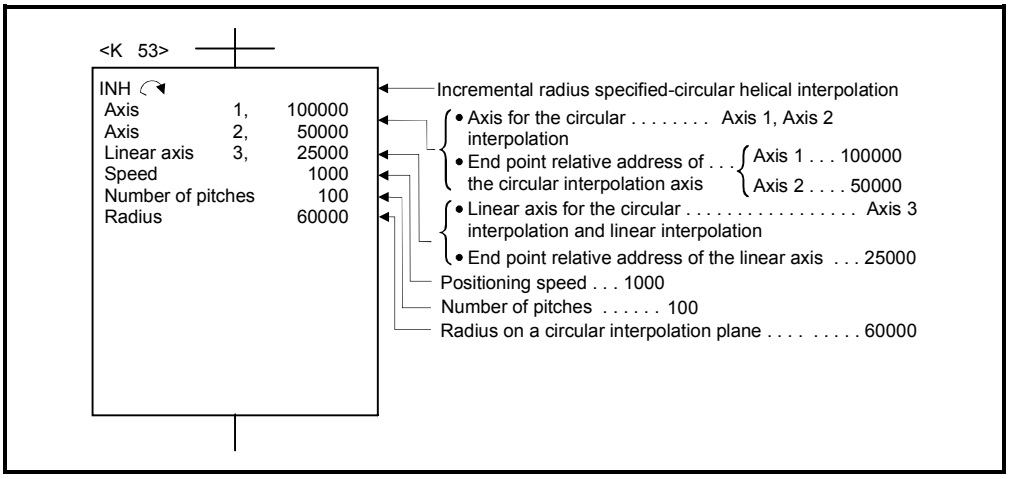

(Note): Example of the Motion SFC program for positioning control is shown next page.

(2) Motion SFC program

Motion SFC program for which executes the servo program is shown below.

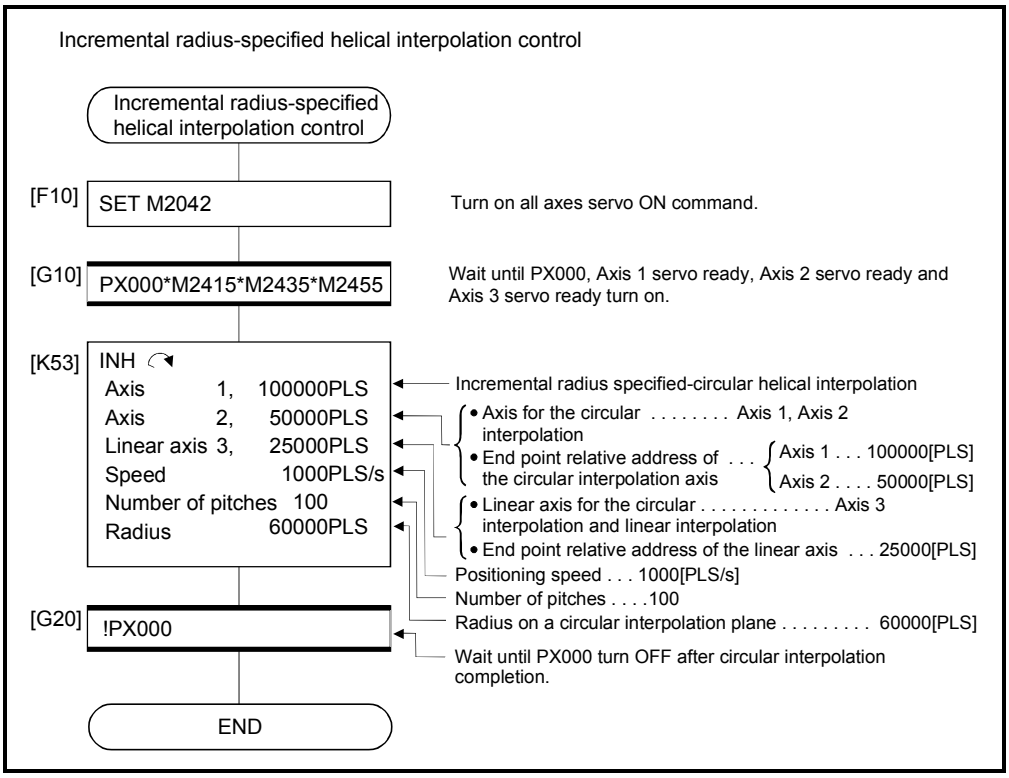

(Note): Example of the above Motion SFC program is started using the automatic start or PLC program.

ABH ↷, ABH ↶ Absolute central point-specified helical interpolation control

[Control details]

The linear interpolation to other linear axis is executed performing 2 axes circular interpolation from current stop position (X0, Y0, Z0) to specified circular end address (X1, Y1) or linear axis end point address (Z1), and the absolute helical interpolation is executed so that it may become a spiral course.
It goes around on the specified circle for the specified number of pitches, the circular interpolation which had remainder specified is executed, and positioning to end address is executed. The central point-specified circle specifies circular interpolation method connected start point and end point at the seeing on the plane for which performs circular interpolation.

Operation details for absolute central point-specified helical interpolation are shown below.

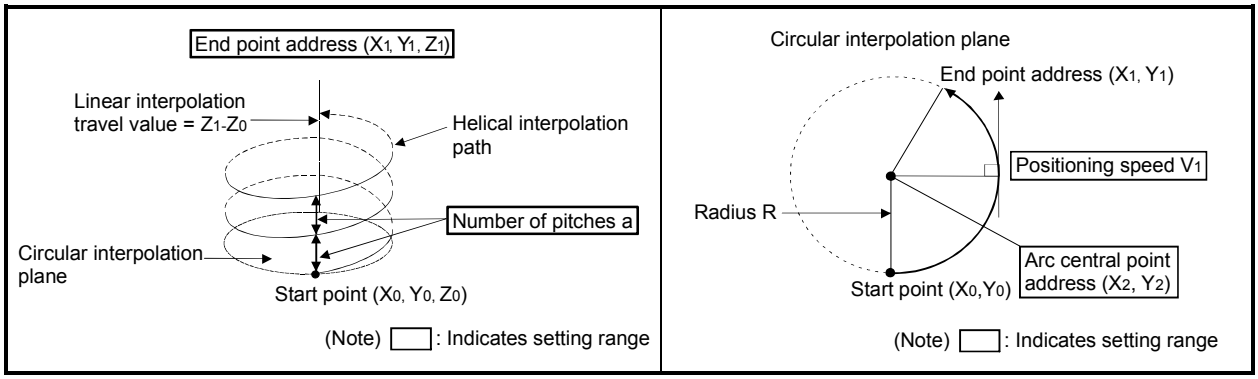

Control details for the servo instructions are shown below.

Instruction	Rotation direction of servomotor	Controllable angle of arc	Positioning pass
ABH ↷ Central point-specified helical interpolation CW	Clockwise (CW)	0° < θ ≦ 360°	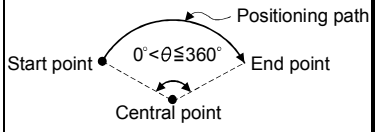
ABH ↶ Central point-specified helical interpolation CCW	Counter clockwise (CCW)		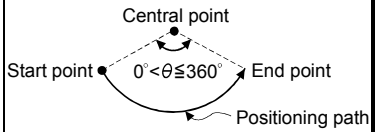

(1) The setting range of end point address for the both of circular interpolation axis and linear interpolation axis is (-2^{31}) to $(2^{31}-1)$.

(2) The setting range of central point address is (-2^{31}) to $(2^{31}-1)$.

(3) The maximum arc radius on the circular interpolation plane is 2^{31}-1.
For example, the maximum arc radius for electronic gear 1:1 of unit [mm] is 214748364.7[μm].

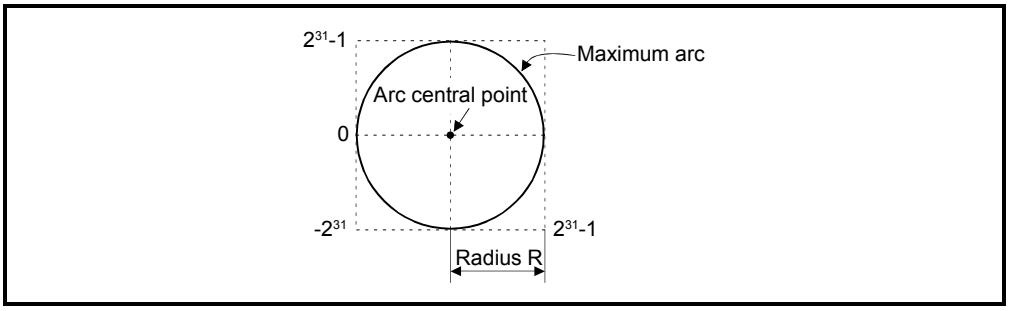

(4) Set the command speed with the combined-speed for 2 axes circular interpolation axis.

(5) The command speed unit is specified in the parameter block.

(6) Set the number of pitches within the range of 0 to 999. If it is set outside the setting range, the servo program error [28] occurs and operation does not start.

(7) All of the circular interpolation axis, linear axis end point address, command speed, radius (2 word data above) and number of pitches (1 word data) are set indirectly by D, W and #.

(8) If start point = end point, number of pitches = 1 and travel value of linear axis = 0, at the only central point-specified circular interpolation, full circle can be drawn.

[Program]

(1) Servo program

Servo program No.55 for absolute central point-specified helical interpolation control is shown below.

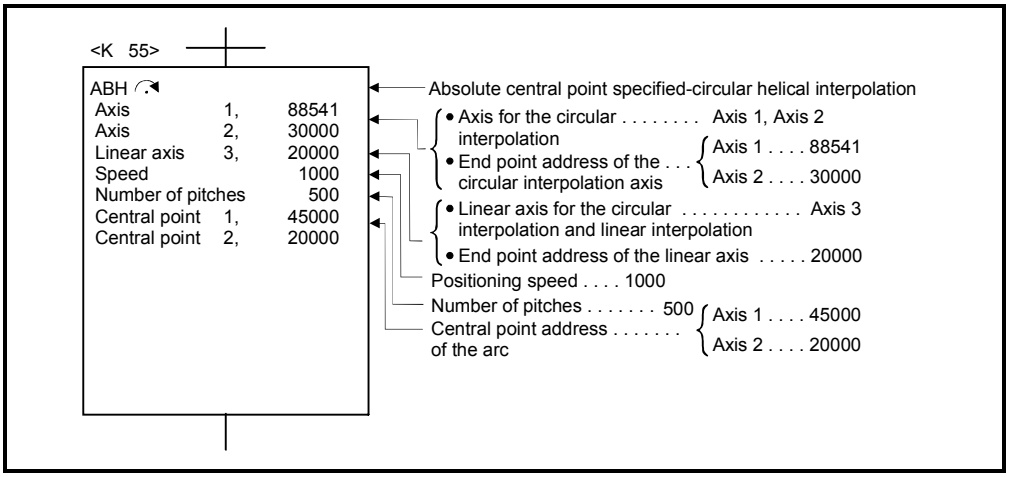

(Note): Example of the Motion SFC program for positioning control is shown next page.

(2) Motion SFC program

Motion SFC program for which executes the servo program is shown below.

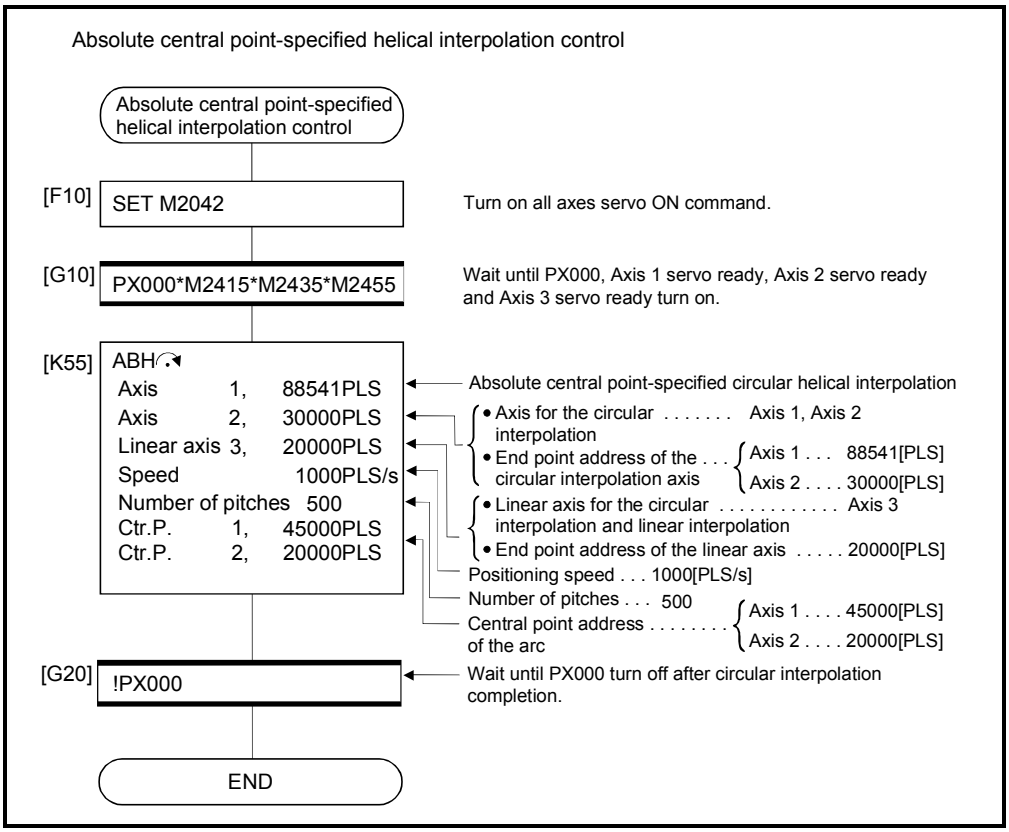

(Note): Example of the above Motion SFC program is started using the automatic start or PLC program.

INH ↷, INH ↶ Incremental central point-specified helical interpolation control

[Control details]

The linear interpolation to other linear axis is executed performing circular interpolation from current stop position (start point) to specified circular relative end address (X1, Y1) or linear axis end point relative address (Z1), and the incremental helical interpolation control is executed so that it may become a spiral course.
It goes around on the specified circle for the specified number of pitches, the circular interpolation which had remainder specified is executed, and positioning to end address is executed. The central point-specified circle specifies circular interpolation method connected start point and end point at the seeing on the plane for which performs circular interpolation.

Operation details for incremental central point -specified helical interpolation are shown below.

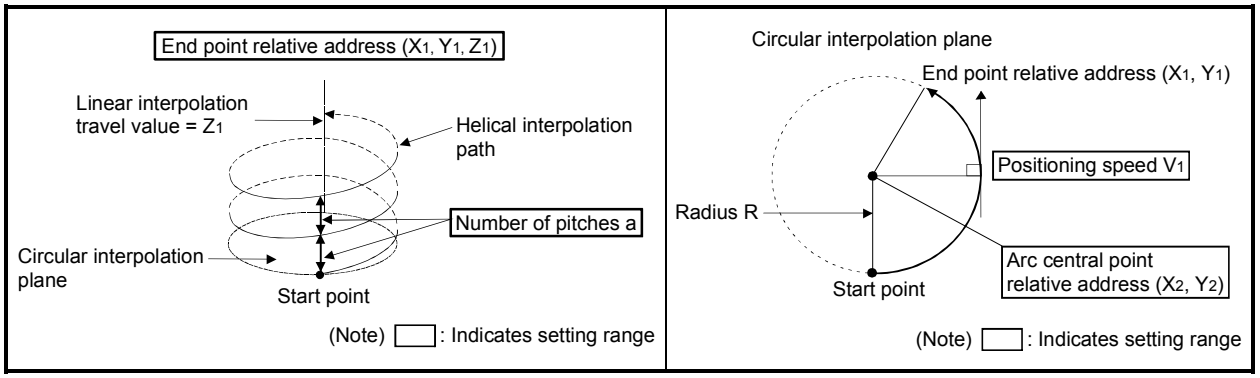

Control details for the servo instructions are shown below.

Instruction	Rotation direction of servomotor	Controllable angle of arc	Positioning pass
INH ↷ Central point-specified helical interpolation CW	Clockwise (CW)	0° < θ ≦ 360°	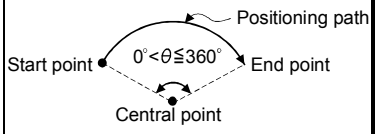
INH ↶ Central point-specified helical interpolation CCW	Counter clockwise (CCW)		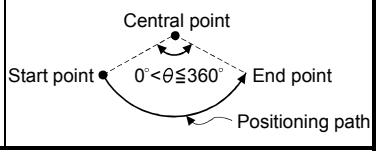

(1) The setting range of end point relative address for the both of circular interpolation axis and linear interpolation axis is 0 to ± (2^{31}-1).

(2) The setting range of central point relative is 0 to ± (2^{31}-1).

(3) The maximum arc radius on the circular interpolation plane is (2^{31}-1).
For example, the maximum arc radius for electronic gear 1:1 of unit [mm] is 214748364.7[μm].

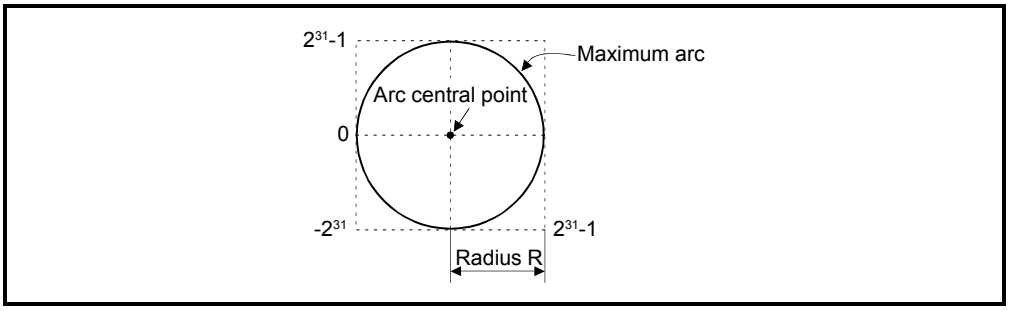

(4) Set the command speed with the combined-speed for 2 axes circular interpolation axis.

(5) The command speed unit is specified in the parameter block.

(6) Set the number of pitches within the range of 0 to 999. If it is set outside the setting range, the servo program error [28] occurs and operation does not start.

(7) All of the circular interpolation axis, linear axis end relative address, command speed, radius (2 word data above) and number of pitches (1 word data) are set indirectly by D, W and #.

(8) If start point = end point, number of pitches = 1 and travel value of linear axis = 0, at the only central point-specified circular interpolation, full circle can be drawn.

[Program]

(1) Servo program

Servo program No.56 for incremental central point-specified helical interpolation control is shown below.

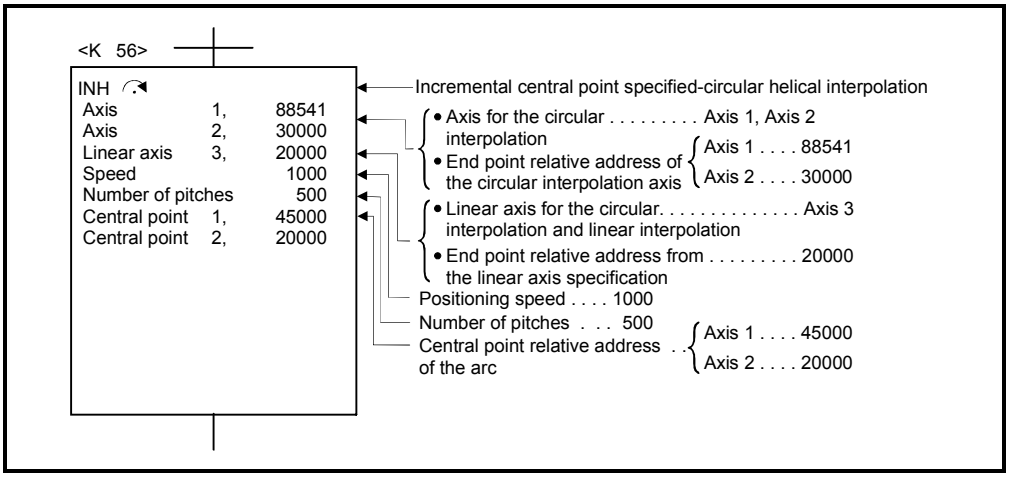

(Note): Example of the Motion SFC program for positioning control is shown next page.

(2) Motion SFC program

Motion SFC program for which executes the servo program is shown below.

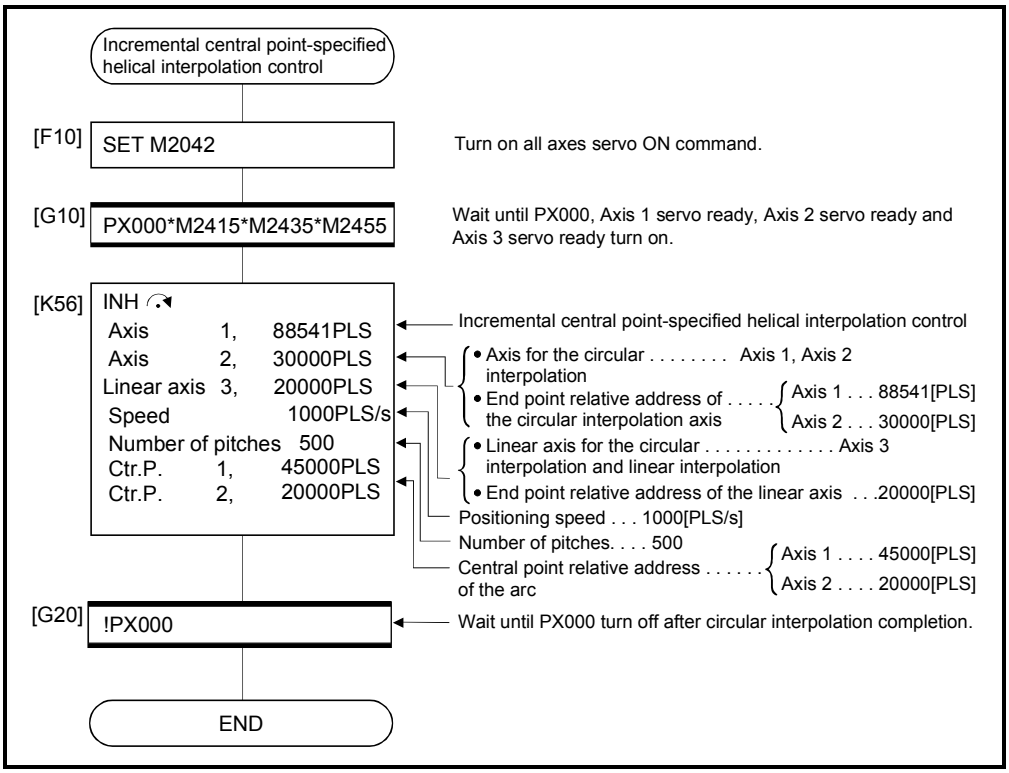

(Note): Example of the above Motion SFC program is started using the automatic start or PLC program.

ABH Absolute auxiliary point-specified helical interpolation control

[Control details]

The linear interpolation to other linear axis is executed performing 2 axes circular interpolation from current stop position (X0, Y0, Z0) to specified circular end address (X1, Y1) or linear axis end point address (Z1), and the absolute helical interpolation is executed so that it may become a spiral course.
It goes around on the specified circle for the specified number of pitches, the circular interpolation which had remainder specified is executed, and positioning to end address is executed. The auxiliary point-specified circle specifies circular interpolation method connected start point and end point at the seeing on the plane for which performs circular interpolation.

Operation details for absolute auxiliary point-specified helical interpolation are shown below.

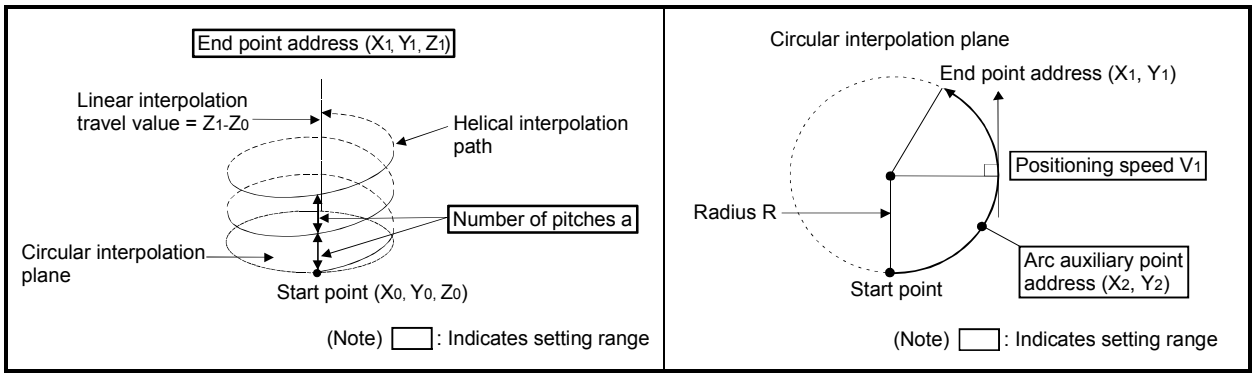

Control details for the servo instructions are shown below.

Instruction	Rotation direction of servomotor	Controllable angle of arc
ABH Auxiliary point-specified helical interpolation	Clockwise (CW)/ Counter clockwise (CCW)	$0° < \theta \leqq 360°$

(1) The setting range of end point address for the both of circular interpolation axis and linear interpolation axis is (-2^{31}) to $(2^{31}-1)$.

(2) The setting range of auxiliary point address is (-2^{31}) to $(2^{31}-1)$.

(3) The maximum arc radius on the circular interpolation plane is $2^{31}-1$.
For example, the maximum arc radius for electronic gear 1:1 of unit [mm] is 214748364.7[μm].

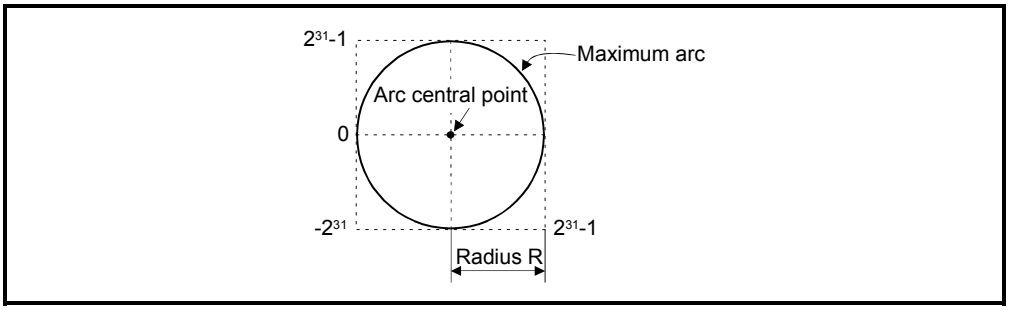

(4) Set the command speed with the combined-speed for 2 axes circular interpolation axis.

(5) The command speed unit is specified in the parameter block.

(6) Set the number of pitches within the range of 0 to 999. If it is set outside the setting range, the servo program error [28] occurs and operation does not start.

(7) All of the circular interpolation axis, linear axis end relative address, command speed, radius (2 word data above) and number of pitches (1 word data) are set indirectly by D, W and #.

[Program]

(1) Servo program

Servo program No.60 for absolute auxiliary point-specified helical interpolation control is shown below.

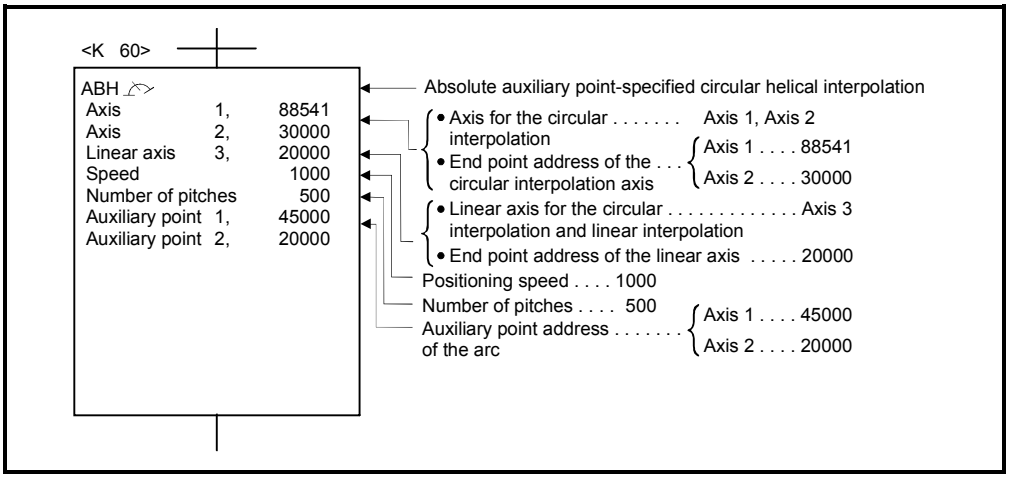

(Note): Example of the Motion SFC program for positioning control is shown next page.

(2) Motion SFC program

Motion SFC program for which executes the servo program is shown below.

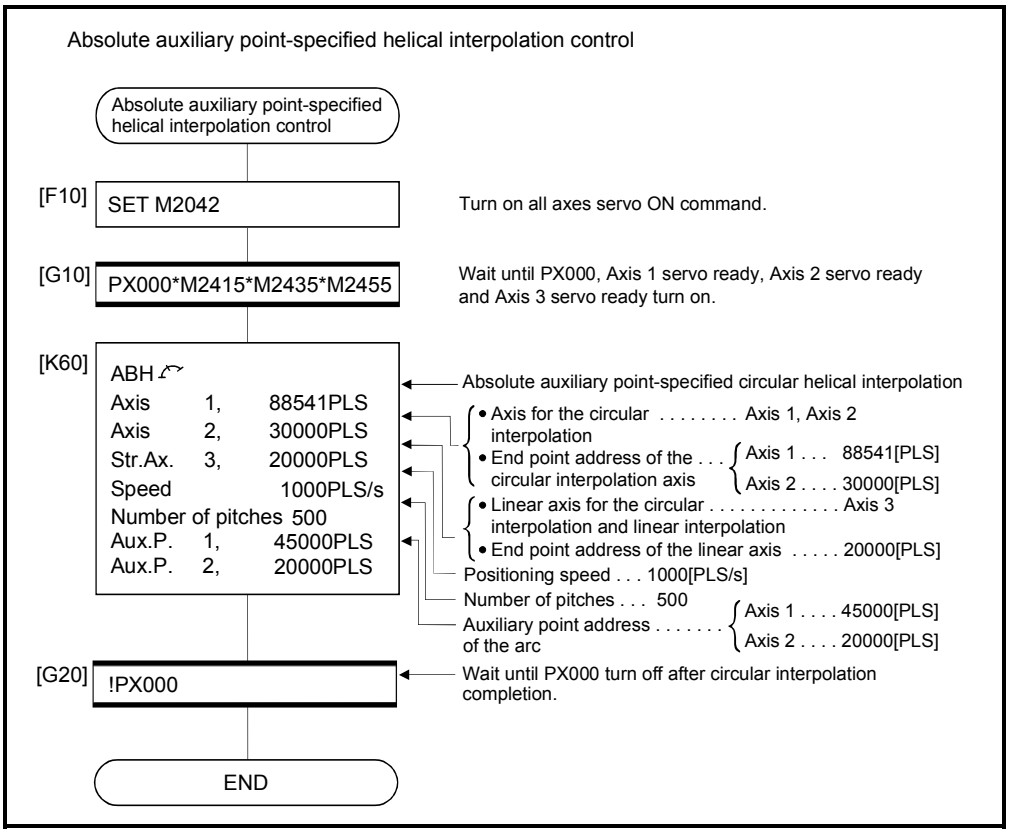

(Note): Example of the above Motion SFC program is started using the automatic start or PLC program.

INH Incremental auxiliary point-specified helical interpolation control

[Control details]

The linear interpolation to other linear axis is executed performing circular interpolation from current stop position (start point) to specified circular relative end address (X1, Y1) or linear axis end point relative address (Z1), and the incremental helical interpolation control is executed so that it may become a spiral course.
It goes around on the specified circle for the specified number of pitches, the circular interpolation which had remainder specified is executed, and positioning to end address is executed. The auxiliary point-specified circle specifies circular interpolation method connected start point and end point at the seeing on the plane for which performs circular interpolation.

Operation details for incremental auxiliary point-specified helical interpolation are shown below.

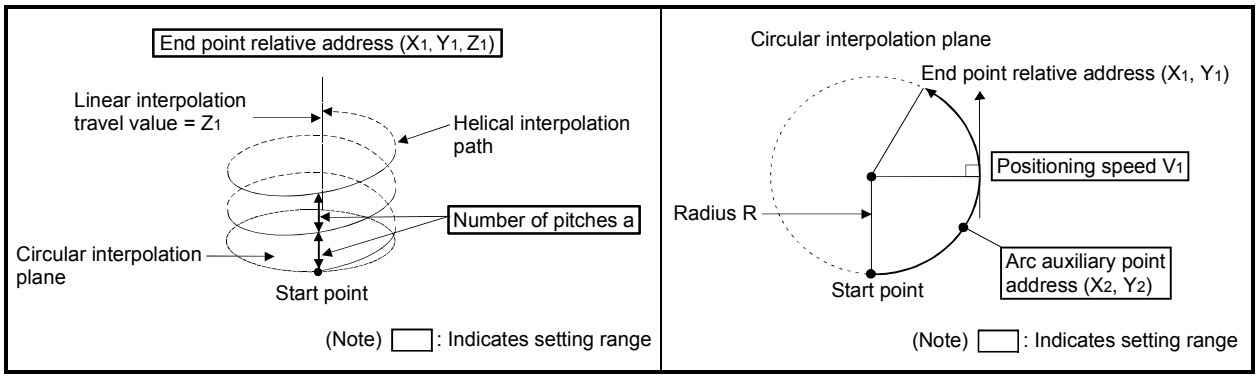

Control details for the servo instructions are shown below.

Instruction	Rotation direction of servomotor	Controllable angle of arc
INH Auxiliary point-specified helical interpolation	Clockwise (CW)/ Counter clockwise (CCW)	$0° < \theta \leqq 360°$

(1) The setting range of end point relative address for the both of circular interpolation axis and linear interpolation axis is 0 to $\pm (2^{31}-1)$.

(2) The setting range of auxiliary point relative is 0 to $\pm (2^{31}-1)$.

(3) The maximum arc radius on the circular interpolation plane is $(2^{31}-1)$.
For example, the maximum arc radius for electronic gear 1:1 of unit [mm] is 214748364.7[μm].

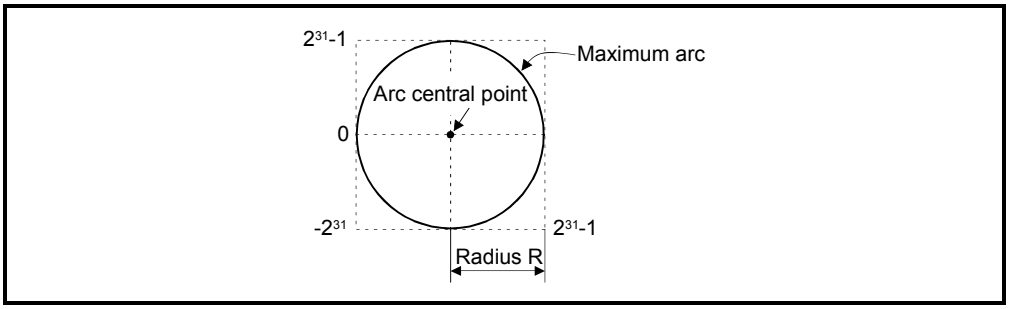

(4) Set the command speed with the combined-speed for 2 axes circular interpolation axis.

(5) The command speed unit is specified in the parameter block.

(6) Set the number of pitches within the range of 0 to 999. If it is set outside the setting range, the servo program error [28] occurs and operation does not start.

(7) All of the circular interpolation axis, linear axis end point address, command speed, radius (2 word data above), and number of pitches (1 word data) are set indirectly by D, W and #.

[Program]

(1) Servo program

Servo program No.61 for incremental auxiliary point-specified helical interpolation control is shown below.

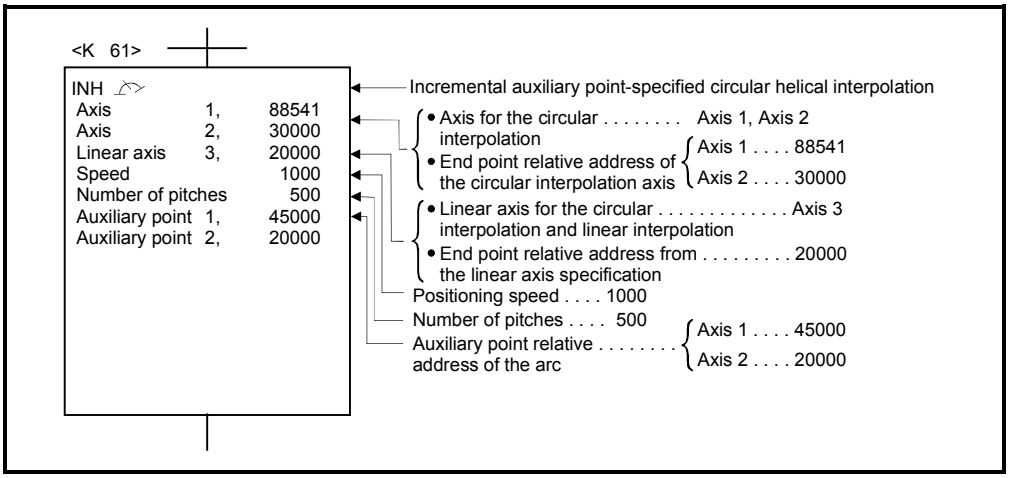

(Note): Example of the Motion SFC program for positioning control is shown next page.

(2) Motion SFC program

Motion SFC program for which executes the servo program is shown below.

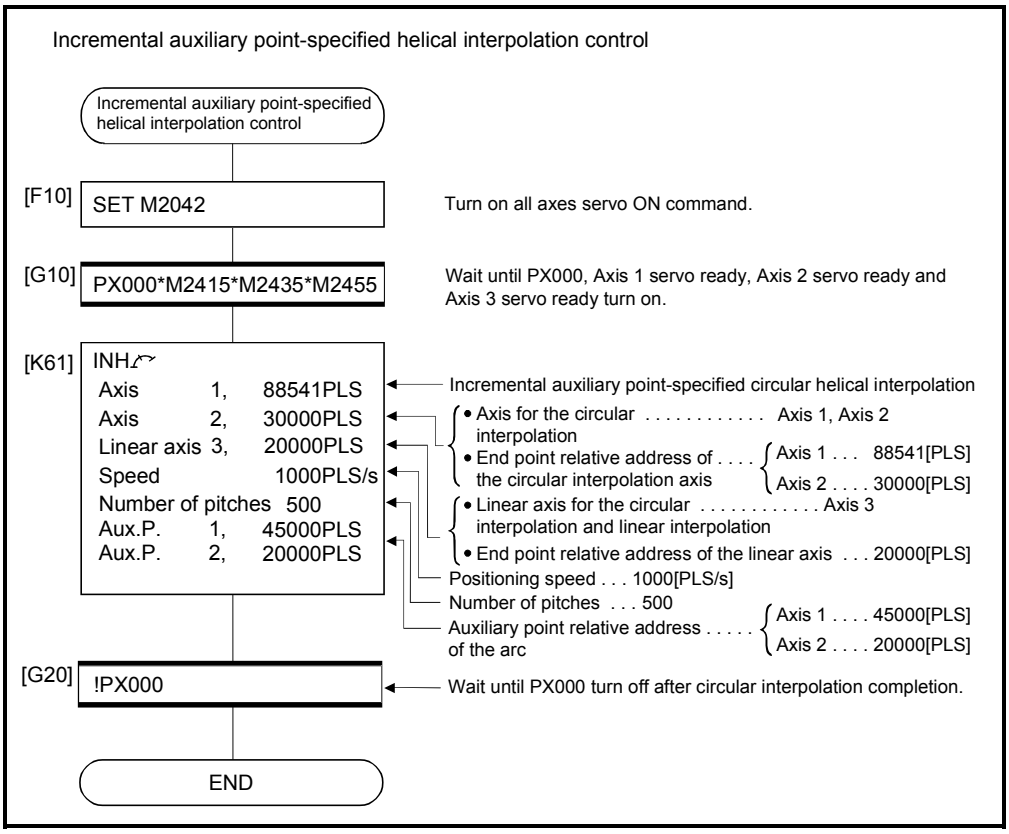

(Note): Example of the above Motion SFC program is started using the automatic start or PLC program.

6.10 1 Axis Fixed-Pitch Feed Control

Positioning control for specified axis of specified travel value from the current stop point.
Fixed-pitch feed control uses the FEED-1servo instruction.

Servo instruction	Positioning method	Number of control axes	Items are set in peripheral devices																					Speed change
			Common							Arc			Parameter block									Others		
			Parameter block No.	Axis	Address/travel value	Command speed	Dwell time	M-code	Torque limit value	Auxiliary point	Radius	Central point	Control units	Speed limit value	Acceleration time	Deceleration time	Rapid stop deceleration time	Torque limit value	Deceleration processing on stop input	Allowable error range for circular interpolation	S-curve ratio	Cancel	WAIT-ON/OFF	
FEED-1	Incremental	1	△	○	○	○	△	△						△	△	△	△	△	△		△	△		Valid

○: Must be set
△: Set if required

[Control details]

(1) Positioning control for the specified travel value from the current stop position "0" is executed.

(2) The travel direction is set by the sign (+/ -) of the travel value, as follows:
- Positive travel value .....Positioning control to forward direction (Address increase direction)
- Negative travel value.....Positioning control to reverse direction (Address decrease direction)

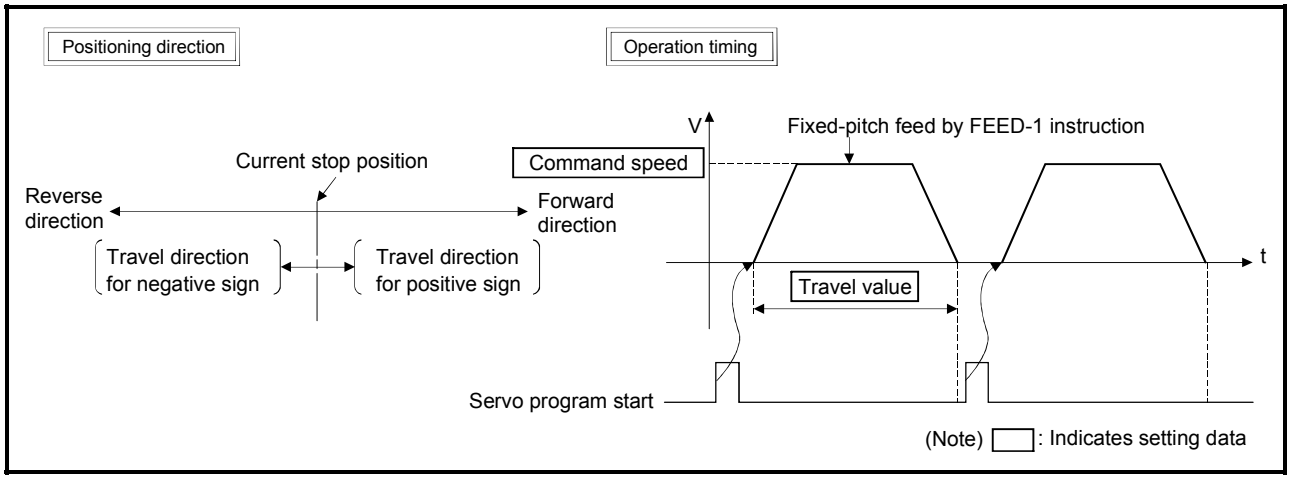

Fig.6.23 1 axis fixed-pitch feed control

POINT

Do not set the travel value to "0" for fixed-pitch feed control.
If the travel value is set to "0", fixed-pitch feed completion without fixed-pitch feed.

[Program]

Program for repetition 1 axis fixed-pitch feed control is shown as the following conditions.

(1) System configuration

Fixed-pitch feed control of Axis 4.

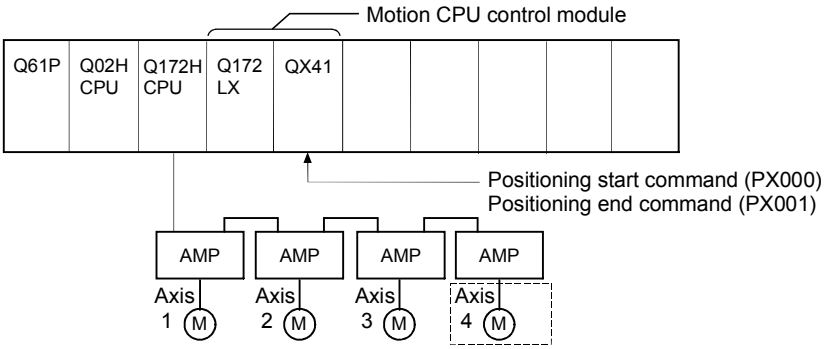

(2) Fixed-pitch feed control conditions

(a) Positioning conditions are shown below.

Item	Setting
Servo program No.	No.300
Control axis	Axis 4
Control speed	10000
Travel value	80000

(b) Fixed-pitch feed control start command ..... Turning PX000 off to on (OFF → ON)

(c) Fixed-pitch feed control end command ..... Turning PX001 off to on (OFF → ON)

(3) Operation timing

Operation timing for fixed-pitch feed control is shown below.

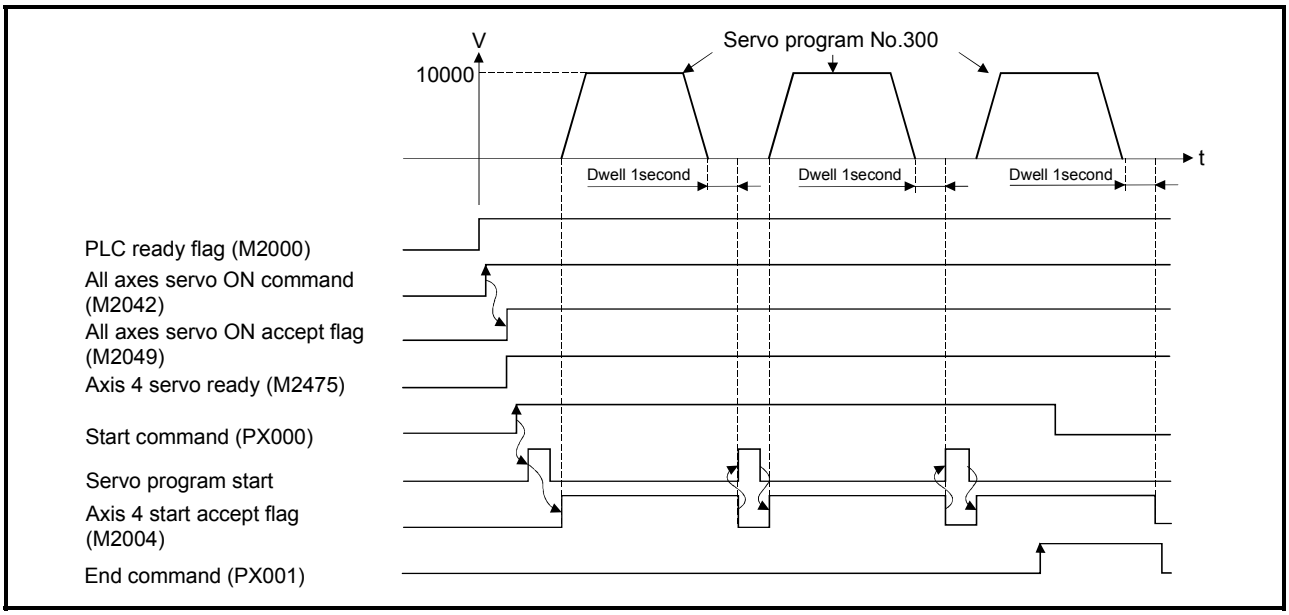

(4) Servo program

Servo program No.300 for fixed-pitch feed control is shown below.

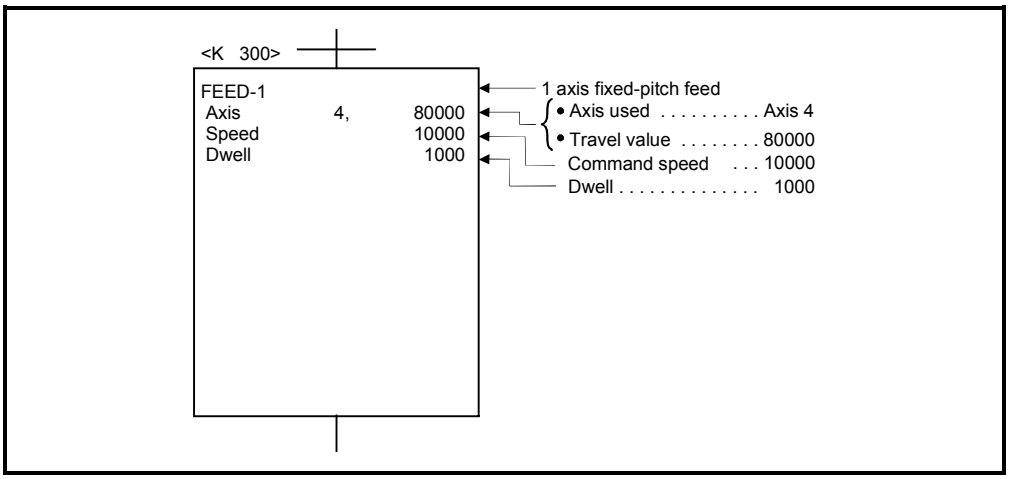

(Note): Example of the Motion SFC program for positioning control is shown next page.

(5) Motion SFC program

Motion SFC program for which executes the servo program is shown below.

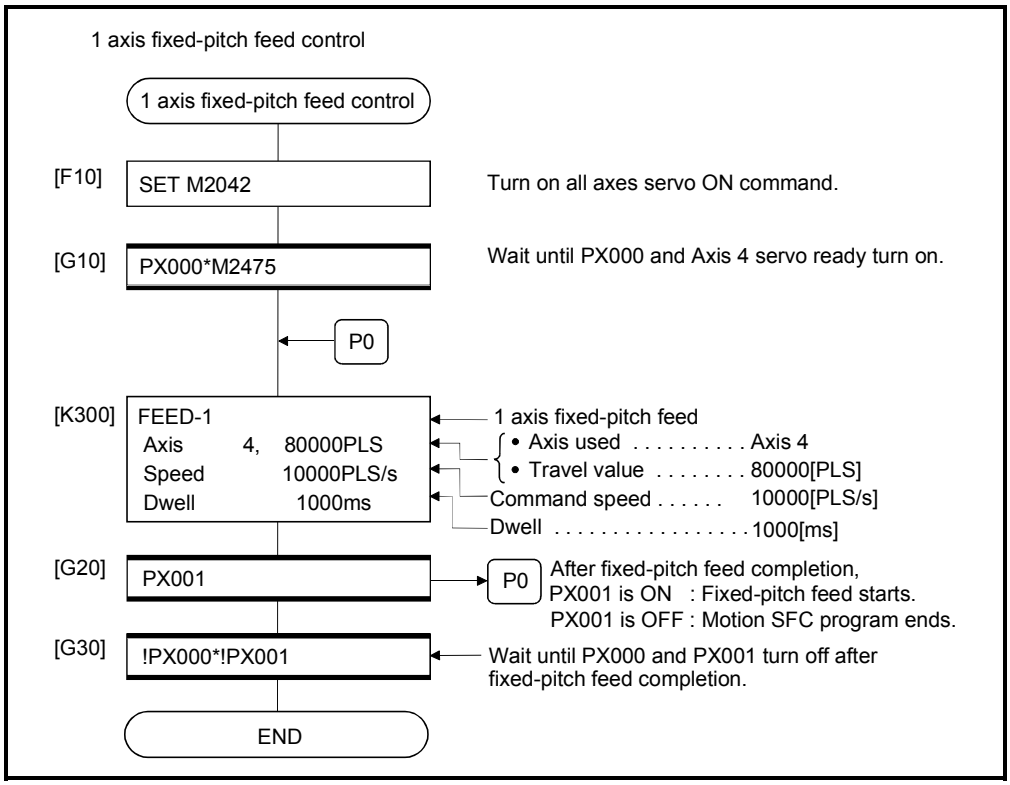

(Note): Example of the above Motion SFC program is started using the automatic start or PLC program.

6.11 Fixed-Pitch Feed Control Using 2 Axes Linear Interpolation

Fixed-pitch feed control using 2 axes linear interpolation from the current stop position with the specified 2 axes.
Fixed-pitch feed control using 2 axes linear interpolation uses the FEED-2 servo instruction.

Servo instruction	Positioning method	Number of control axes	Items are set in peripheral devices																							Speed change
			Common							Arc			Parameter block											Others		
			Parameter block No.	Axis	Address/travel value	Command speed	Dwell Time	M-Code	Torque Limit Value	Auxiliary point	Radius	Central point	Control unit	Speed limit value	Acceleration time	Deceleration time	Rapid stop deceleration time	Torque limit value	Deceleration processing on stop input	Allowable error range for circular interpolation	S-curve ratio	Cancel	WAIT-ON/OFF	
FEED-2	Incremental	2	△	○	○	○	△	△					△	△	△	△	△	△	△		△	△		Valid

○: Must be set
△: Set if required

[Control details]

(1) Positioning control from the current stop position "0" to the position which combined travel direction and travel value specified with each axis is executed.

(2) The travel direction for each axis is set by the sign (+/ -) of the travel value for each axis, as follows:
- Positive travel value .....Positioning control to forward direction (Address increase direction)
- Negative travel value.....Positioning control to reverse direction (Address decrease direction)

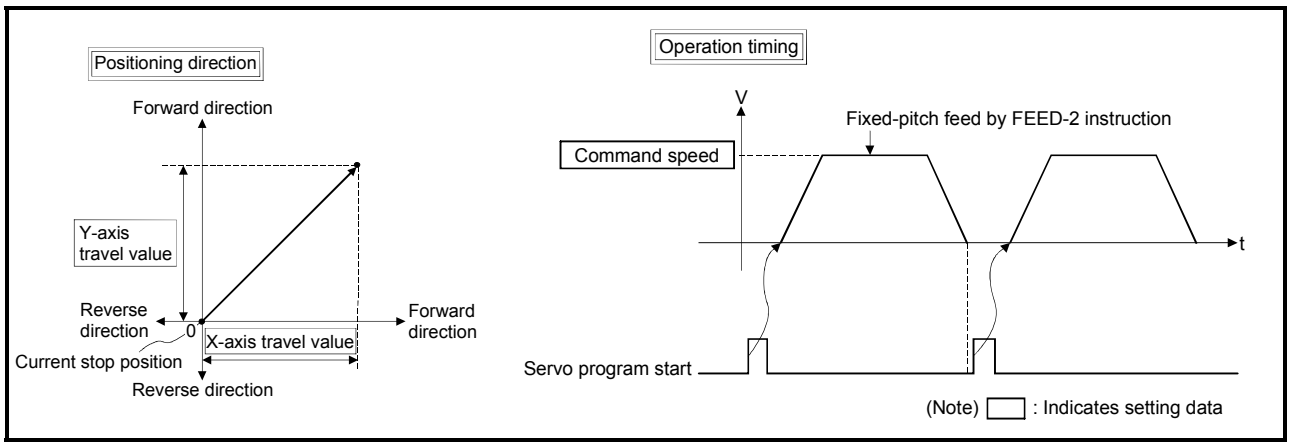

Fig.6.24 Fixed-pitch feed control using 2 axes linear interpolation

POINT
Do not set the travel value to "0" for fixed-pitch feed control. The following results if the travel value is set to "0": (1) If the travel value of both is set to "0", fixed-pitch feed completion without fixed-pitch feed.

[Program]

Program for fixed-pitch feed control using 2 axes linear interpolation is shown as the following conditions.

(1) System configuration

Fixed-pitch feed control using 2 axes linear interpolation of Axis 2 and Axis 3.

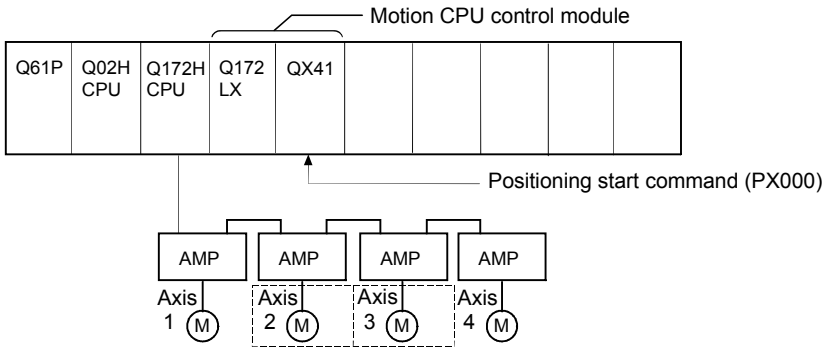

(2) Fixed-pitch feed control

(a) Fixed-pitch feed control conditions are shown below.

Item	Setting	
Servo program No.	No.310	
Positioning speed	10000	
Control axis	Axis 2	Axis 3
Travel value	500000	300000

(b) Fixed-pitch feed control start command ..... Turning PX000 off to on (OFF → ON)

(3) Operation timing

Operation timing for fixed-pitch feed control using 2 axes linear interpolation is shown below.

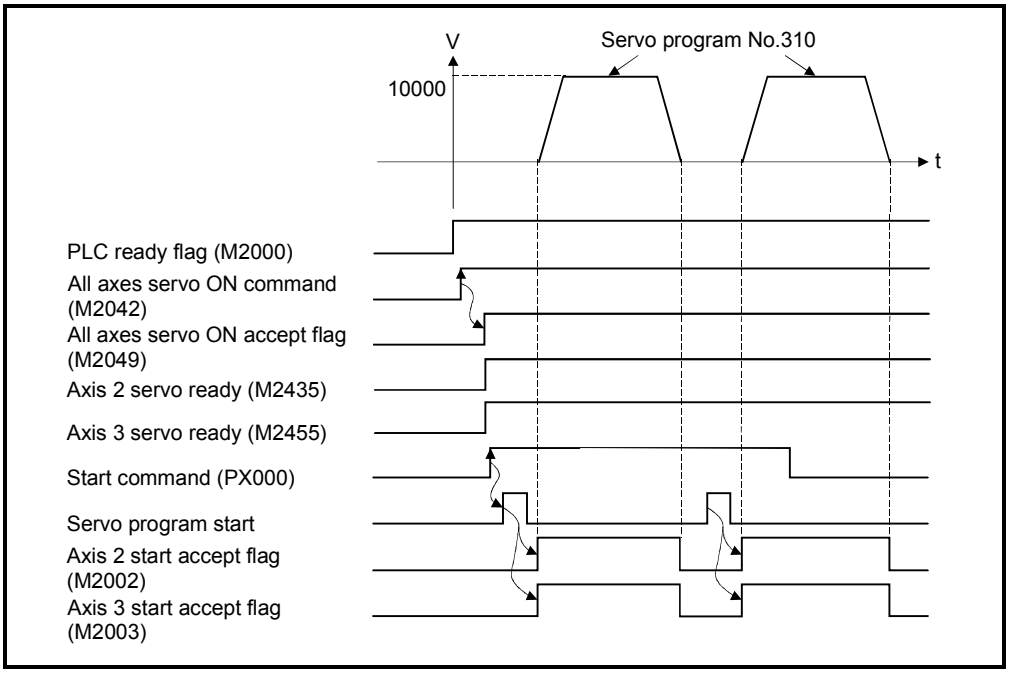

(4) Servo program

Servo program No.310 for fixed-pitch feed control using 2 axes linear interpolation is shown below.

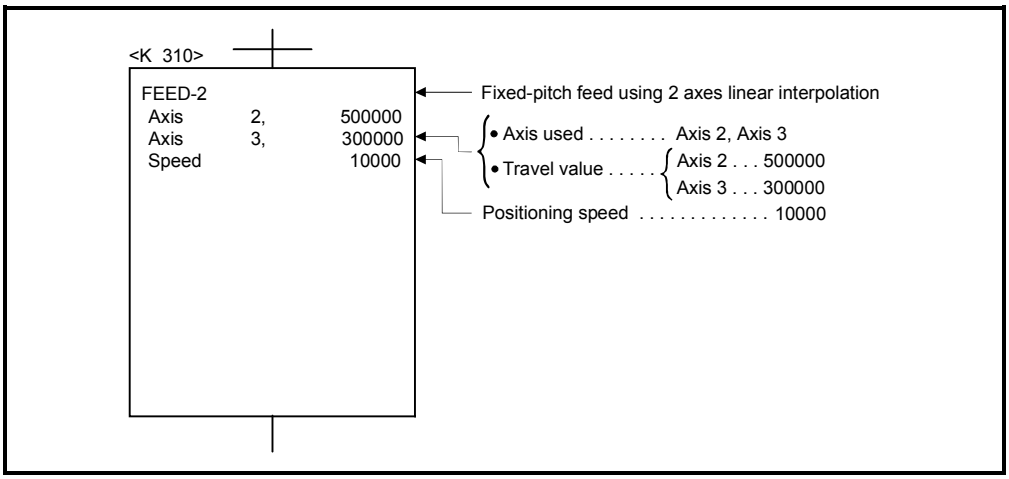

(Note): Example of the Motion SFC program for positioning control is shown next page.

(5) Motion SFC program

Motion SFC program for which executes the speed-switching control is shown below.

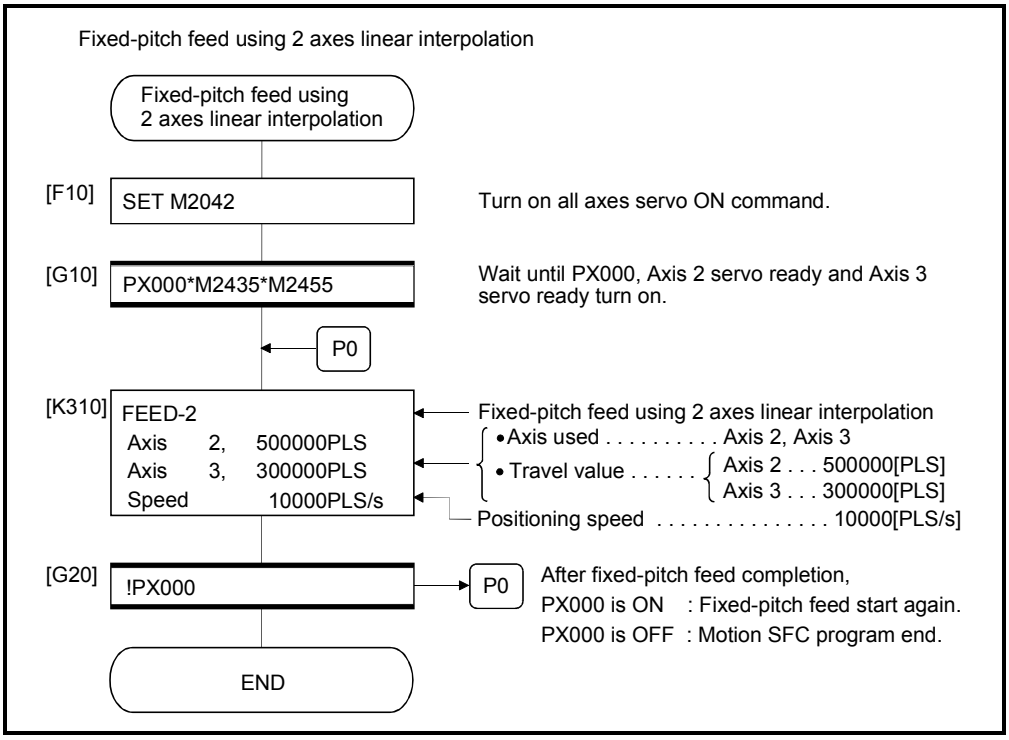

(Note): Example of the above Motion SFC program is started using the automatic start or PLC program.

6.12 Fixed-Pitch Feed Control Using 3 Axes Linear Interpolation

Fixed-pitch feed control using 3 axes linear interpolation from the current stop position with the specified 3 axes.
Fixed-pitch feed control using 3 axes linear interpolation uses the FEED-3 servo instruction.

Servo instruction	Positioning method	Number of control axes	Items are set in peripheral devices																							Speed change
			Common							Arc			Parameter block											Others		
			Parameter block No.	Axis	Address/travel value	Command speed	Dwell time	M-code	Torque limit value	Auxiliary point	Radius	Central point	Control unit	Speed limit value	Acceleration time	Deceleration time	Rapid stop deceleration time	Torque limit value	Deceleration processing on stop input	Allowable error range for circular interpolation	S-curve ratio	Cancel	WAIT-ON/OFF	
FEED-3	Incremental	3	△	○	○	○	△	△					△	△	△	△	△	△	△		△	△		Valid

○: Must be set
△: Set if required

[Control details]

(1) Positioning control from the current stop position "0" to the position which combined travel direction and travel value specified with each axis is executed.

(2) The travel direction for each axis is set by the sign (+/ -) of the travel value for each axis, as follows:
- Positive travel value .....Positioning control to forward direction (Address increase direction)
- Negative travel value.....Positioning control to reverse direction (Address decrease direction)

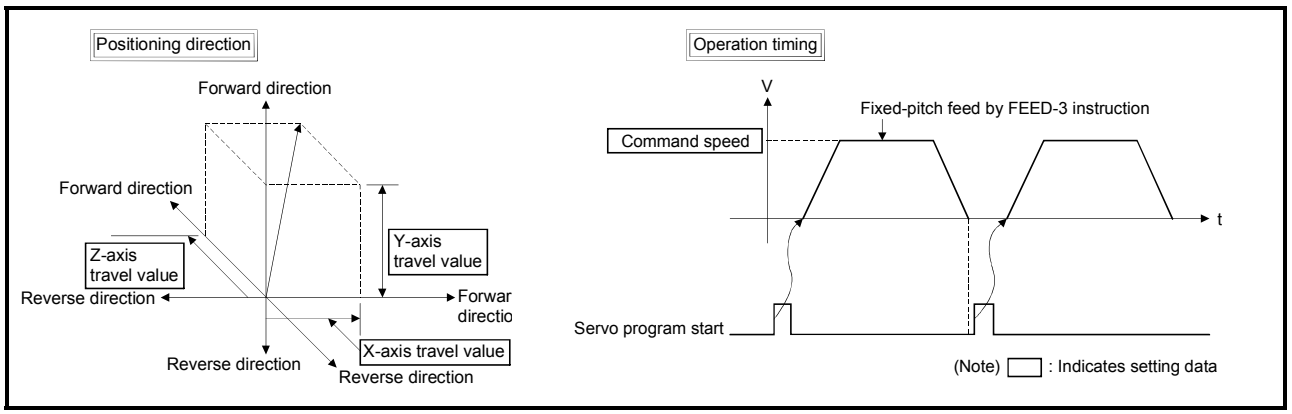

Fig. 6.25 Fixed-pitch feed control using 3 axes linear interpolation

POINT
Do not set the travel value to "0" for fixed-pitch feed control. The following results if the travel value is set to "0": (1) If the travel value of all axes are set to "0", fixed-pitch feed completion without fixed-pitch feed.

[Program]

Program for fixed-pitch feed control using 3 axes linear interpolation is shown as the following conditions.

(1) System configuration

Fixed-pitch feed control using 3 axes linear interpolation of Axis 1, Axis 2 and Axis 3.

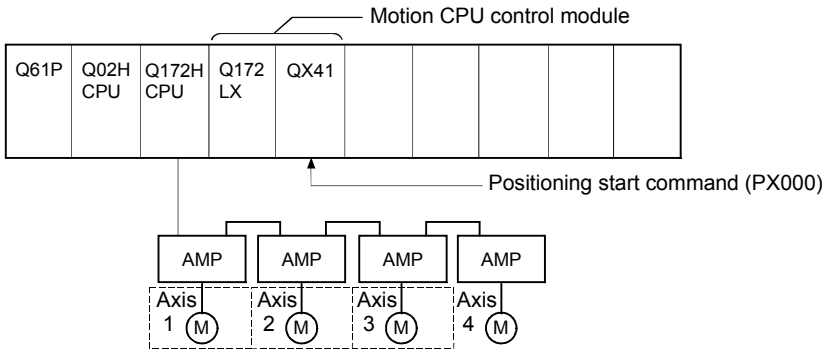

(2) Fixed-pitch feed control

(a) Fixed-pitch feed control conditions are shown below.

Item	Setting		
Servo program No.	No.320		
Positioning speed	1000		
Control axes	Axis 1	Axis 2	Axis 3
Travel value	50000	40000	30000

(b) Fixed-pitch feed control start command ..... Turning PX000 off to on (OFF → ON)

(3) Operation timing

Operation timing for fixed-pitch feed control using 3 axes linear interpolation is shown below.

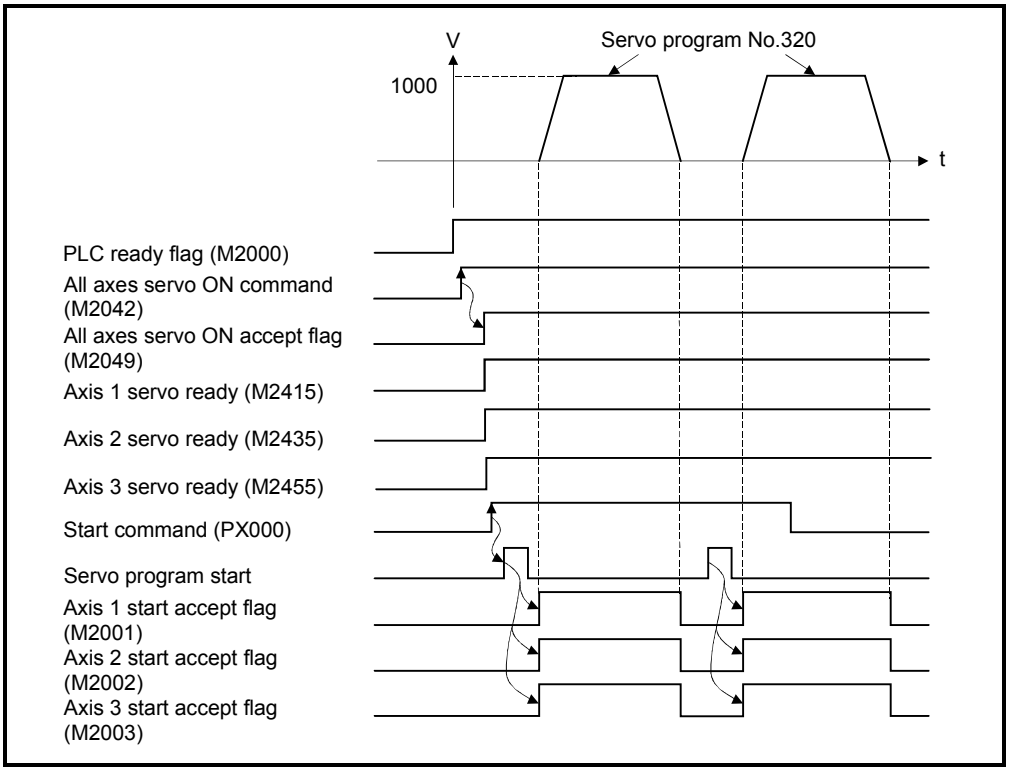

(4) Servo program

Servo program No.320 for fixed-pitch feed control using 3 axes linear interpolation is shown below.

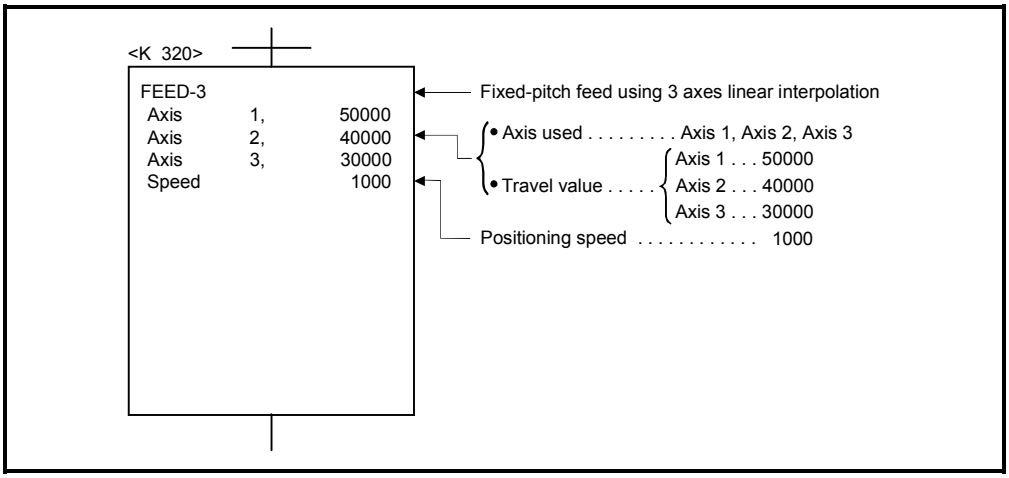

(Note): Example of the Motion SFC program for positioning control is shown next page.

(5) Motion SFC program

Motion SFC program for which executes the servo program is shown below.

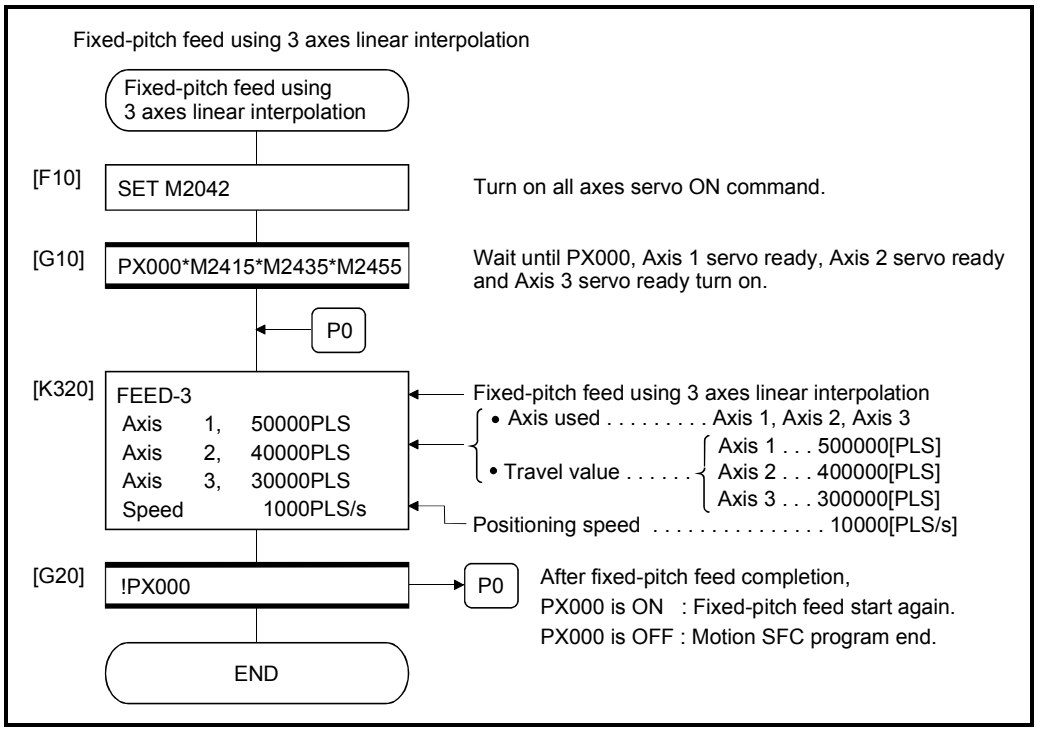

(Note): Example of the above Motion SFC program is started using the automatic start or PLC program.

6.13 Speed Control (I)

(1) Speed control for the specified axis is executed.

(2) Control includes positioning loops for control of servo amplifiers.

(3) Speed control (I) uses the VF (Forward) and VR (Reverse) servo instructions.

Servo instruction	Positioning method	Number of control axes	Items are set in peripheral devices																								Speed change
			Common							Arc			Parameter block												Others		
			Parameter block No.	Axis	Address/travel value	Command speed	Dwell time	M-code	Torque limit value	Auxiliary point	Radius	Central point	Control unit	Speed limit value	Acceleration time	Deceleration time	Rapid stop deceleration time	Torque limit value	Deceleration processing on stop input	Allowable error range for circular interpolation	S-curve ratio	Cancel	WAIT-ON/OFF				
VF VR	–	1	△	○		○		△						△	△	△	△	△	△		△	△					Valid

○: Must be set
△: Set if required

[Control details]

(1) Controls the axis at the specified speed until the input of the stop command after starting of the servomotors.
- VF ..... Forward direction start
- VR ..... Reverse direction start

(2) Current value does not change at "0".

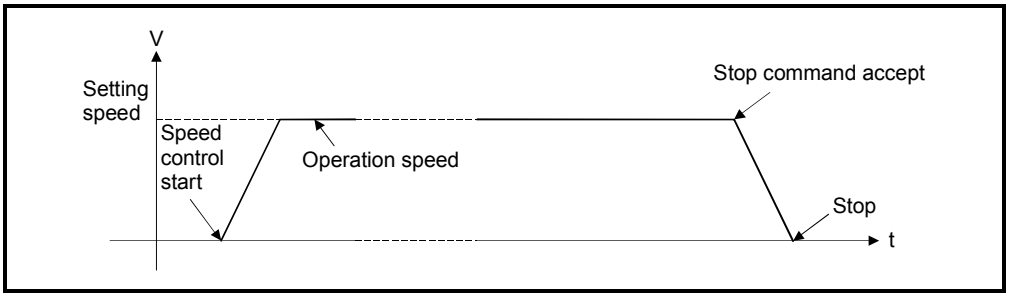

Fig.6.26 Speed control (I)

(3) Stop commands and stop processing

The stop commands and stop processing for speed control are shown in the table.6.1.

Table.6.1 Stop commands and stop processing

Stop command	Stop condition	Stop axis	Stop processing
STOP signal input of the Q172LX (STOP)	OFF → ON	Specified axis	Deceleration stop based on the parameter block or the "deceleration time on STOP input" specified with the servo instruction.
Stop command (M3200+20n)			Deceleration stop based on the parameter block or the "deceleration time" specified with the servo instruction.
Rapid stop command (Note) (M3201+20n)			Deceleration stop based on the parameter block or the "rapid stop deceleration time" specified with the servo instruction.
Rapid stop of the all axes/ deceleration stop from the peripheral devices. (Note) (Test mode)	Click icon	All axes	Deceleration stop based on the parameter block or the "rapid stop deceleration time" specified with the servo instruction.
Speed change to speed "0"	Speed change request	Specified axis	Deceleration stop based on the parameter block or the "deceleration time" specified with the servo instruction.

POINT

(Note): The rapid stop command and the rapid stop of the all axes from the peripheral devices are also valid during deceleration by the "STOP signal input of the Q172LX" (STOP) or stop command (M3200+20n), and processing based on the "rapid stop deceleration time" parameter starts at the time the stop condition occurs.

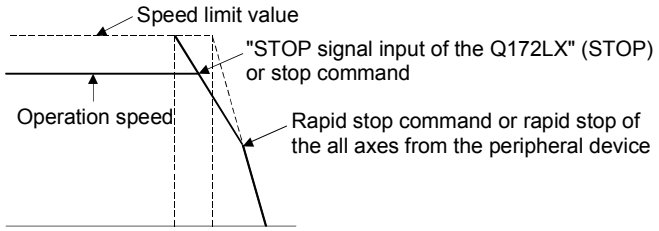

[Cautions]

(1) After executing of the speed control using the absolute position system, the feed current value cannot be set to "0" by the following operations:
- Reset
- Turning the servo power supply on (OFF → ON)

(2) The dwell time cannot be set.

[Program]

Program for speed control (I) is shown as the following conditions.

(1) System configuration

Speed control (I) of Axis 1.

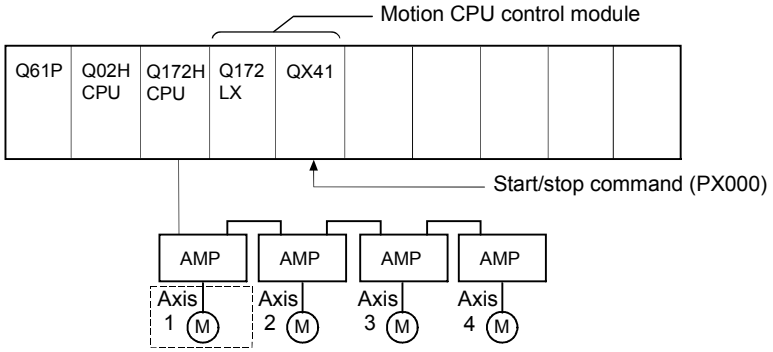

(2) Speed control (I) conditions

(a) Speed control (I) conditions are shown below.

Item	Setting
Servo program No.	No.91
Control axis	Axis 1
Control speed	3000
Rotation direction	Forward

(b) Speed control (I) start command..... Turning PX000 off to on (OFF → ON)

(c) Stop command..... Turning PX000 on to off (ON → OFF)

(3) Operation timing

Operation timing for speed control (I) is shown below.

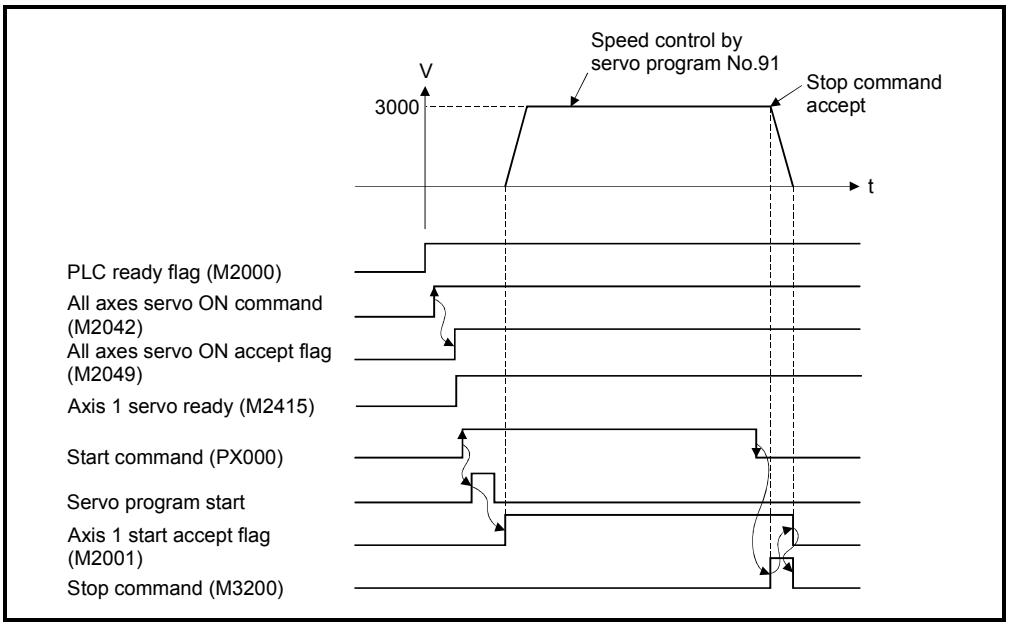

(4) Servo program

Servo program No.91 for speed control (I) is shown below.

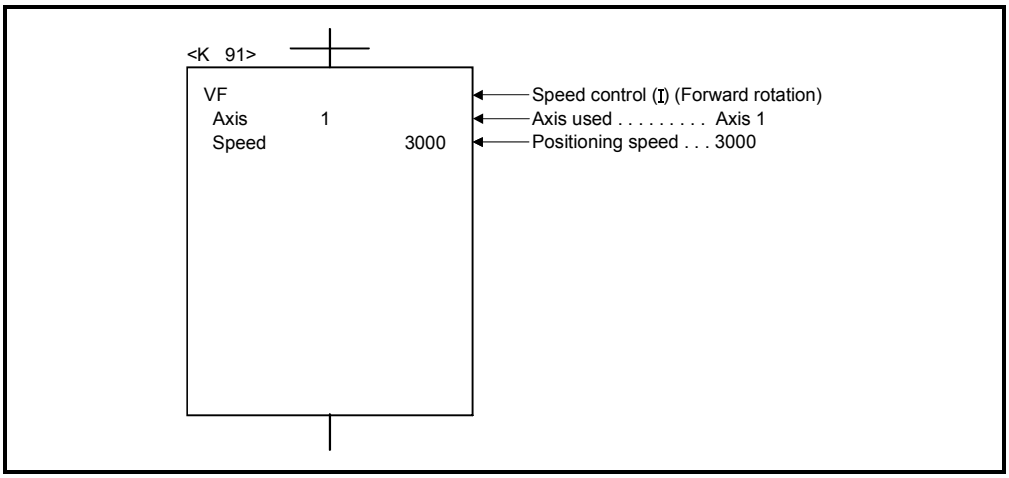

(5) Motion SFC program

Motion SFC program for which executes the servo program is shown below.

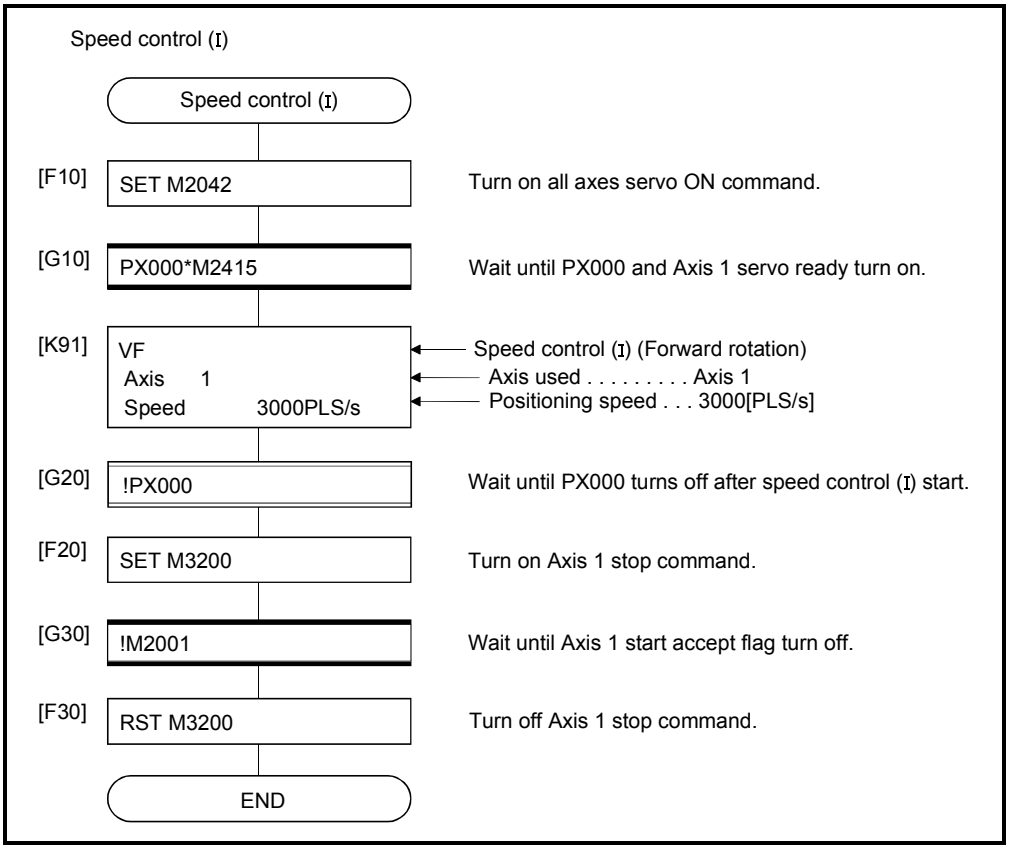

(Note): Example of the above Motion SFC program is started using the automatic start or PLC program.

6.14 Speed Control (Ⅱ)

(1) Speed control for the specified axis is executed.

(2) Speed control not includes positioning loops for control of servo amplifiers.
It can be used for stopper control, etc. so that it may not become error excessive.

(3) Speed control (Ⅱ) uses the VVF (Forward) and VVR (Reverse) servo instructions.

Servo instruction	Positioning method	Number of control axes	Items are set in peripheral devices																							Speed change
			Common							Arc			Parameter block											Others		
			Parameter block No.	Axis	Address/travel value	Command speed	Dwell time	M-code	Torque limit value	Auxiliary point	Radius	Central point	Control unit	Speed limit value	Acceleration time	Deceleration time	Rapid stop deceleration time	Torque limit value	Deceleration processing on stop input	Allowable error range for circular interpolation	S-curve ratio	Cancel	WAIT-ON/OFF	
VVF VVR	–	1	△	○		○		△	△					△	△	△	△	△	△		△	△		Valid

○: Must be set
△: Set if required

[Control details]

(1) Controls the axis at the specified speed until the input of the stop command after starting of the servomotors.
- VVF ..... Forward direction start
- VVR..... Reverse direction start

(2) Current value or deviation counter do not change at "0".

(3) When the setting for "torque" is set in the servo program and an indirect setting made, the torque limit value can be changed during operation by changing the value of the indirect device.

(4) The stop command and stop processing are the same as for speed control (I).

[Cautions]

(1) After executing of the speed control using the absolute position system, the feed current value cannot be set to "0" by the following operations:
- Reset
- Turning the servo power supply on (OFF → ON)

(2) The dwell time cannot be set.

(3) Even if the speed command is set as probe data by the digital oscilloscope function, the value on digital oscilloscope does not change with “0”.

[Program]

Program for speed control (Ⅱ) is shown as the following conditions.

(1) System configuration

Speed control (Ⅱ) of Axis 3.

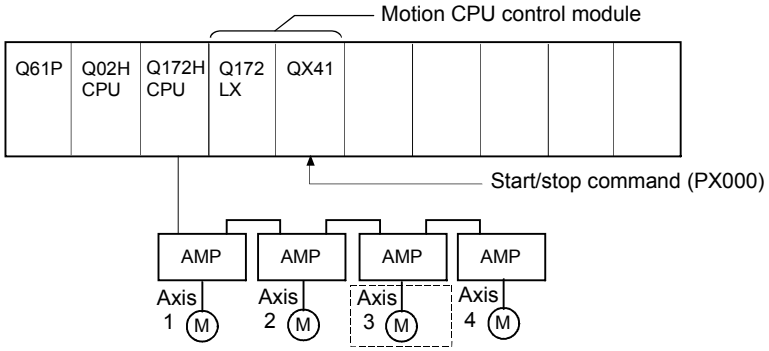

(2) Speed control (Ⅱ) conditions

(a) Speed control (Ⅱ) conditions are shown below.

Item	Setting
Servo program No.	No.55
Control axis	Axis 3
Control speed	4000
Rotation direction	Forward

(b) Speed control (Ⅱ) start command ..... Turning PX000 off to on (OFF → ON)

(c) Stop command .....…… Turning PX000 on to off (ON → OFF)

(3) Operation timing

Operation timing for speed control (Ⅱ) is shown below.

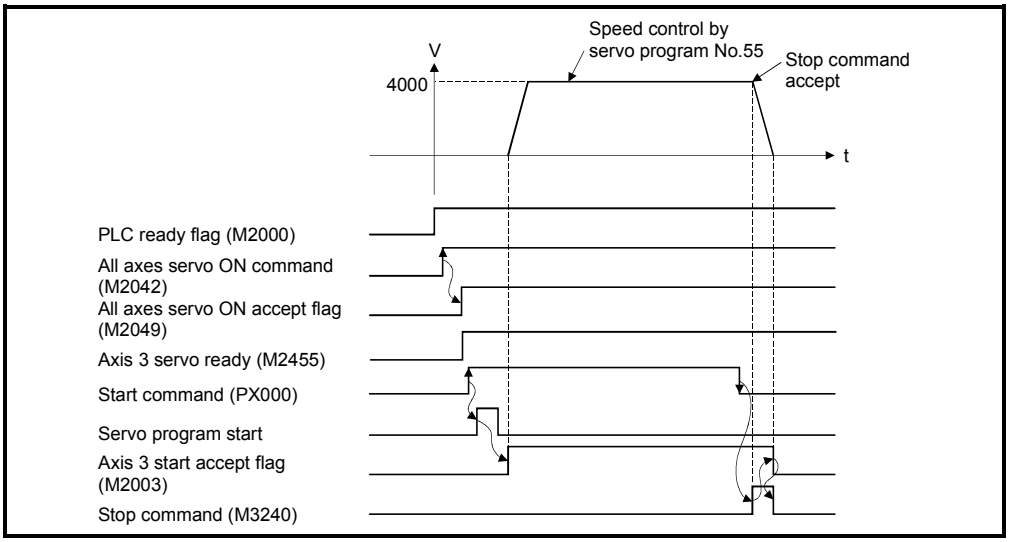

(4) Servo program

Servo program No.55 for speed control (Ⅱ) is shown below.

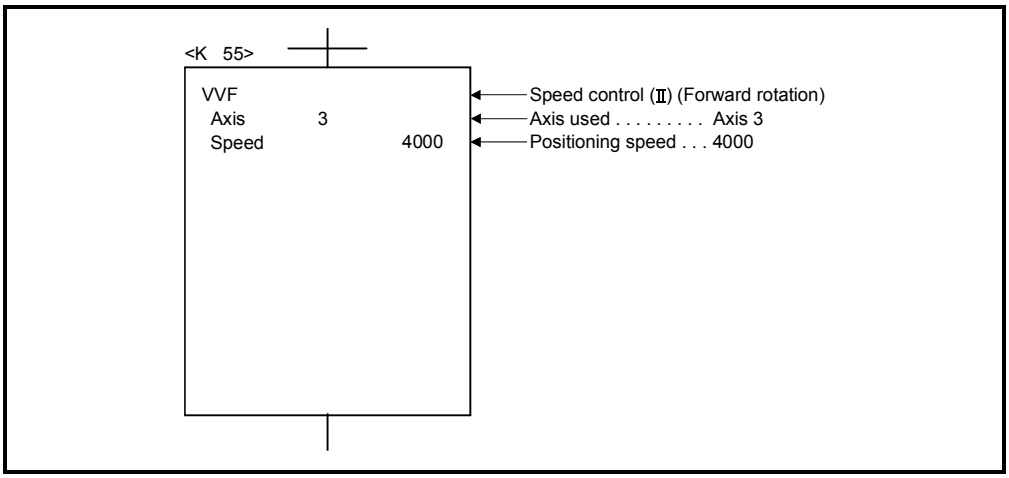

(5) Motion SFC program

Motion SFC program for which executes the servo program is shown below.

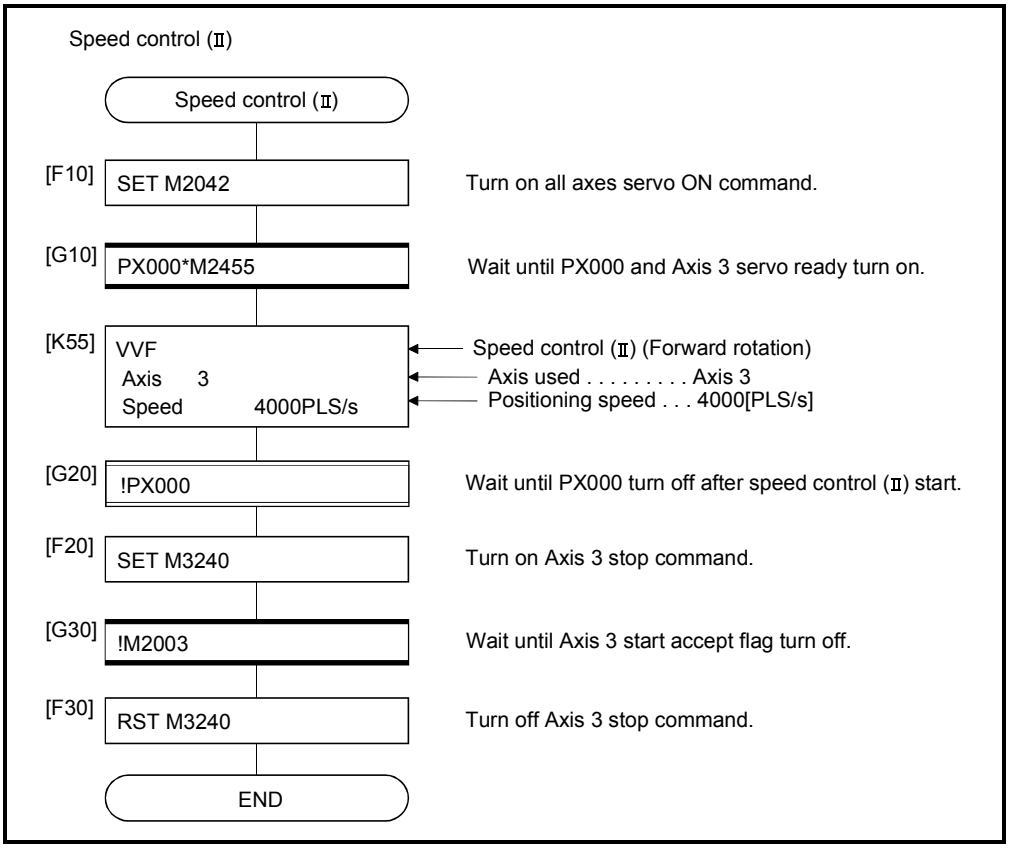

(Note): Example of the above Motion SFC program is started using the automatic start or PLC program.

6.15 Speed/Position Switching Control

6.15.1 Speed/position switching control start

Speed/position switching control for specified axis is executed.
Speed/position switching control uses the VPF (Forward rotation), VPR (Reverse rotation) and VPSTART (Re-start) servo instructions.

Servo instruction	Positioning method	Number of control axes	Items are set in peripheral devices: Common: Parameter block No.	Axis	Address/travel value	Command speed	Dwell time	M-code	Torque limit value	Arc: Auxiliary point	Radius	Central point	Parameter block: Control unit	Speed limit value	Acceleration time	Deceleration time	Rapid stop deceleration time	Torque limit value	Deceleration processing on stop input	Allowable error range for circular interpolation	S-curve ratio	Others: Cancel	WAIT-ON/OFF	Speed change
VPF VPR	Incremental	1	△	○	○	○	△	△	△					△	△	△	△	△	△		△	△		Valid

○: Must be set
△: Set if required

[Control details]

(1) The speed control is executed after the start of the servomotor, and changes from speed control to position control with the CHANGE (Speed/position switching) signal from external source, and then the specified positioning travel value is executed.
- VPF..... Forward rotation direction (Address increase direction) start
- VPR….. Reverse rotation direction (Address decrease direction) start

(2) The CHANGE signal from external source is effective during speed/position switching enable signal (M3205+20n) is on only. If M3205+20n turns on after the CHANGE signal turned on, it does not change from speed control to position control and speed control is continued.

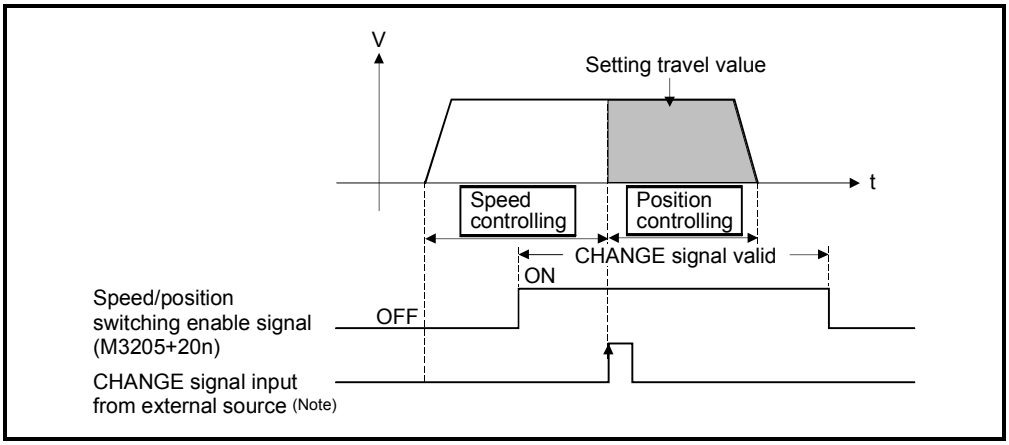

REMARK

(Note): "The external CHANGE signal input from external source" is inputted to CHANGE of the Q172LX from external source. When "normally open contact input" is set in the system settings, CHANGE input occurs at the CHANGE signal on, and when "normally closed contact input" is set, CHANGE input occurs at the CHANGE signal off. (Refer to the "Q173HCPU/Q172HCPU Motion controller User's Manual".)

(3) Feed current value processing

The feed current value is as follows by turning feed current value update request command (M3212+20n) on/off at the speed/position switching control start.

(a) M3212+20n OFF..... • The feed current value is cleared to "0" at the start.
• The feed current value is updated from the start (speed control).
• The feed current value after stop is as follows:

[Feed current value after stop] = [Travel value during speed control] + [Travel value for position control]

(b) M3212+20n ON..... • The feed current value is not cleared at the start.
• The feed current value is updated from the start (speed control).
• If the feed current value exceeds the stroke limit, a deceleration stop is executed.
• The feed current value after stop is as follows:

[Feed current value after stop] = [Address before speed control start] + [Travel value during speed control] + [Travel value for position control]

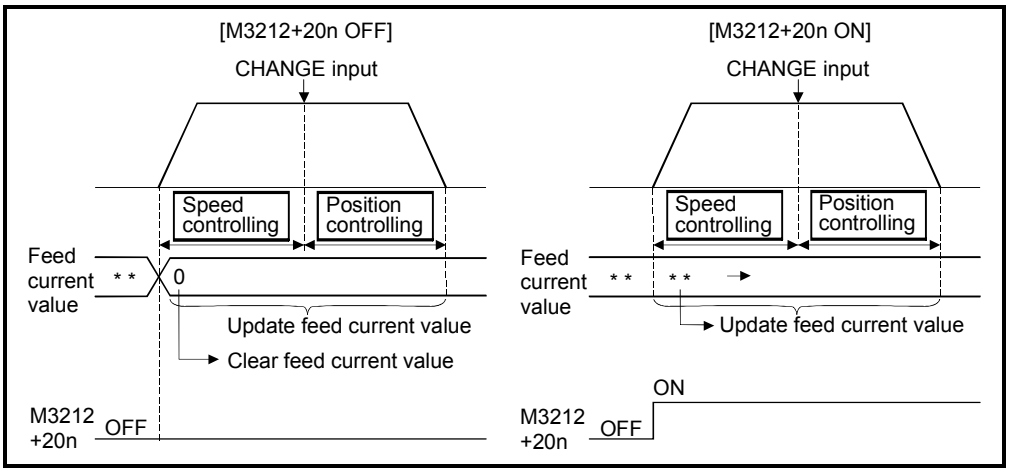

POINT

If it is started with M3212+20n on, leave M3212+20n on until positioning control is completed. If it is turns off during control, the feed current value cannot be guaranteed.

(4) Change of the travel value during speed control

The travel value for position control can be changed during speed control after speed/position control start.

(a) The travel value is set in indirect specification by data registers (2-word data) shown in the table below in the servo program.

Axis No. (Note)	Data register No. at indirect specification	Data registers for travel value change	
		Higher rank data	Lower rank data
1	D16	D17	D16
2	D36	D37	D36
3	D56	D57	D56
4	D76	D77	D76
5	D96	D97	D96
6	D116	D117	D116
7	D136	D137	D136
8	D156	D157	D156
9	D176	D177	D176
10	D196	D197	D196
11	D216	D217	D216
12	D236	D237	D236
13	D256	D257	D256
14	D276	D277	D276
15	D296	D297	D296
16	D316	D317	D316
17	D336	D337	D336
18	D356	D357	D356
19	D376	D377	D376
20	D396	D397	D396
21	D416	D417	D416
22	D436	D437	D436
23	D456	D457	D456
24	D476	D477	D476
25	D496	D497	D496
26	D516	D517	D516
27	D536	D537	D536
28	D556	D557	D556
29	D576	D577	D576
30	D596	D597	D596
31	D616	D617	D616
32	D636	D637	D636

(Note): The range of axis No.1 to 8 is valid in the Q172HCPU.

Example

The following servo program which performs the speed control for axis 4 to the forward direction at speed 50000, and the position control of the travel value set in D76, D77 after the CHANGE signal from external source turns on.

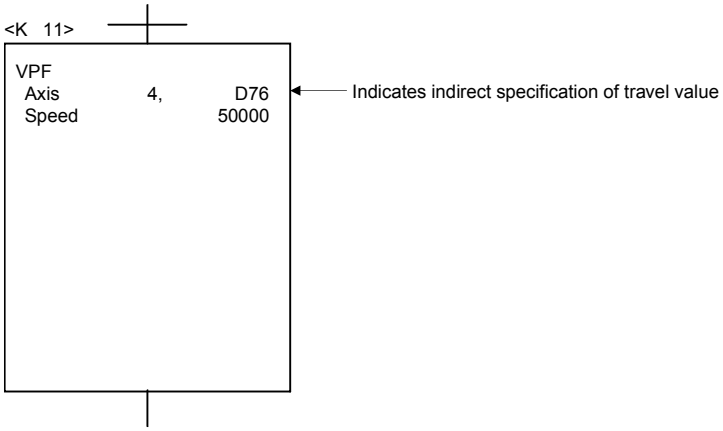

(b) The travel value is stored in the data register for travel value change during speed control in the Motion SFC program. When the CHANGE signal turns on, the contents of the data register for travel value change are set as the travel value.

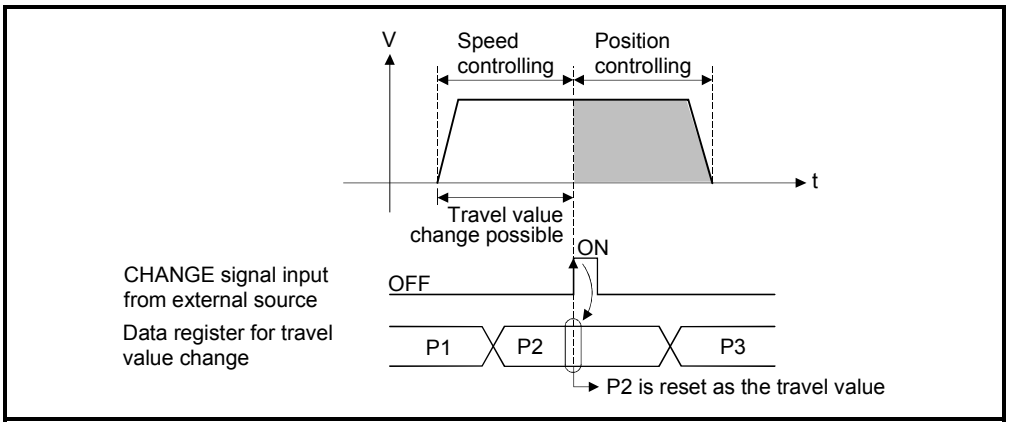

(5) Travel value area after proximity dog ON

The travel value since the position mode was selected by the CHANGE signal input from external source is stored in the travel value storage register after proximity dog ON. (Refer to Section 3.2.1)

[Cautions]

(1) Item check at the CHANGE signal ON from external source

When the external CHANGE signal turns on, speed control switches to position control if the following conditions are met:

- Start accept flag (M2001+n) is turning on.
- Speed control is executing after starting of the speed/position switching control.
- Speed/position switching enable command (M3205+20n) is turning on.

(2) No speed control

Position control only is executed if M3205+20n and CHANGE signal are turning on at the start. The speed controlling signal (M2404+20n) does not turn on.

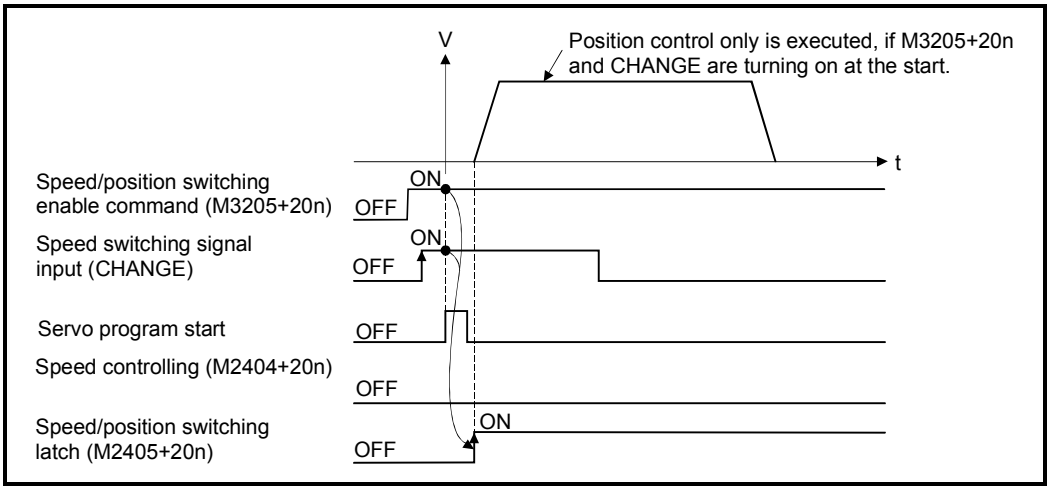

(3) "Travel value for position control" is less than "deceleration distance"

(a) If the travel value for position control is less than the deceleration distance at controlling speed, deceleration processing starts immediately when CHANGE is input.

(b) The difference between travel value for the deceleration stop and position control is the overrun. At this time, the error detection signal (M2407+20n) turns on and error code [209] is stored in the data register.

(c) The positioning complete signal (M2401+20n) does not turn on.

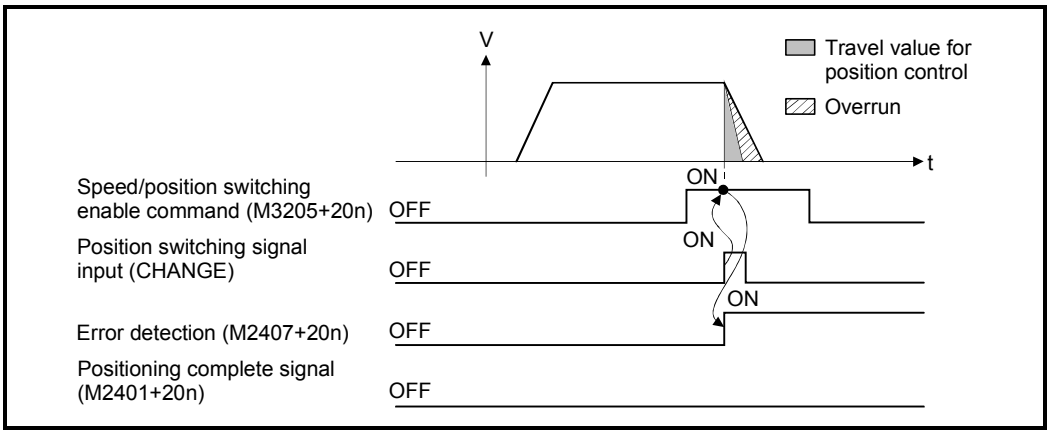

(4) Stroke limit check

Stroke limit range is not checked during the speed mode. If the travel value exceeds the stroke limit range, a minor error (error code: 210) occurs when position mode is selected, and performs a deceleration stop.

[Program]

Program for speed/position switching control is shown as the following conditions.

(1) System configuration

Speed/position switching control of Axis 4.

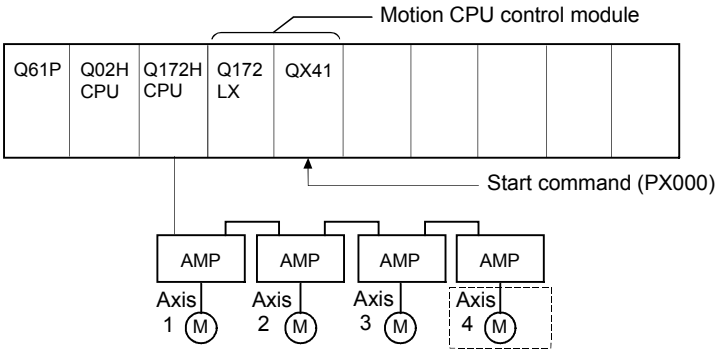

(2) Positioning conditions

(a) Positioning conditions are shown below.

Item	Positioning conditions
Servo program No.	101
Control axis	Axis 4
Travel value for positioning control	40000
Command speed	1000

(b) Positioning start command ..... Turning PX000 off to on

(c) Speed/position switching enable command M3265

(3) Operation timing

Operation timing for speed/position switching control is shown below.

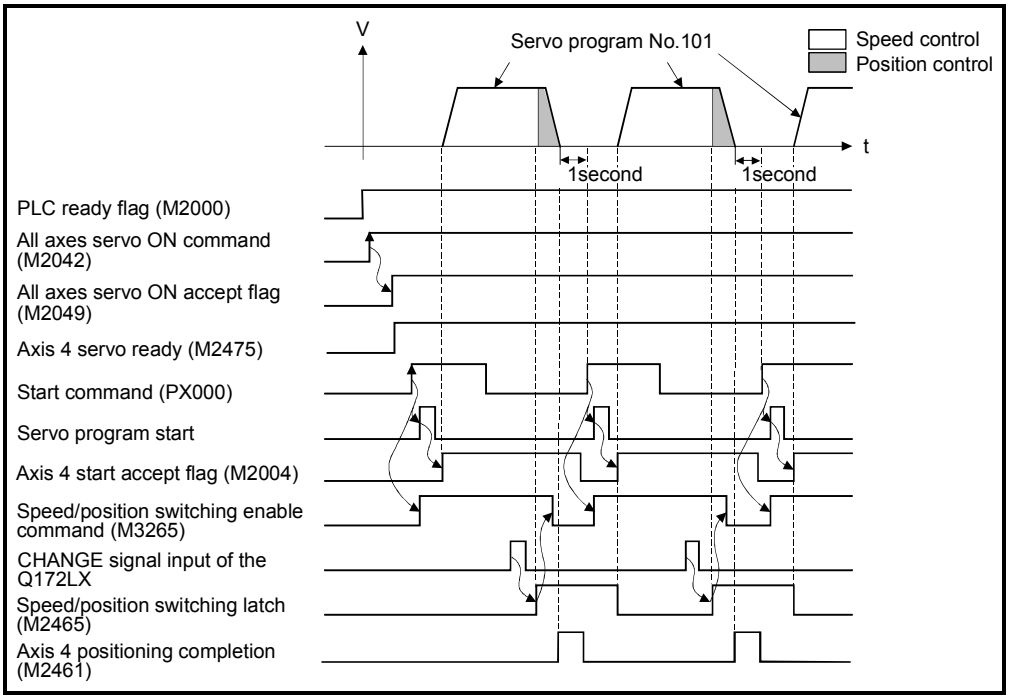

(4) Servo program

Servo program No.101 for speed/position switching control is shown below.

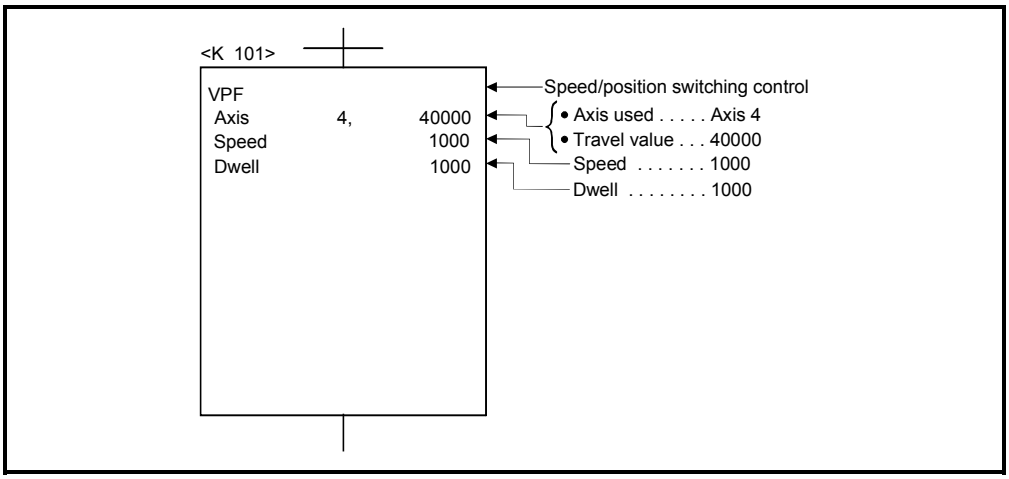

(5) Motion SFC program

Motion SFC program for which executes the servo program is shown below.

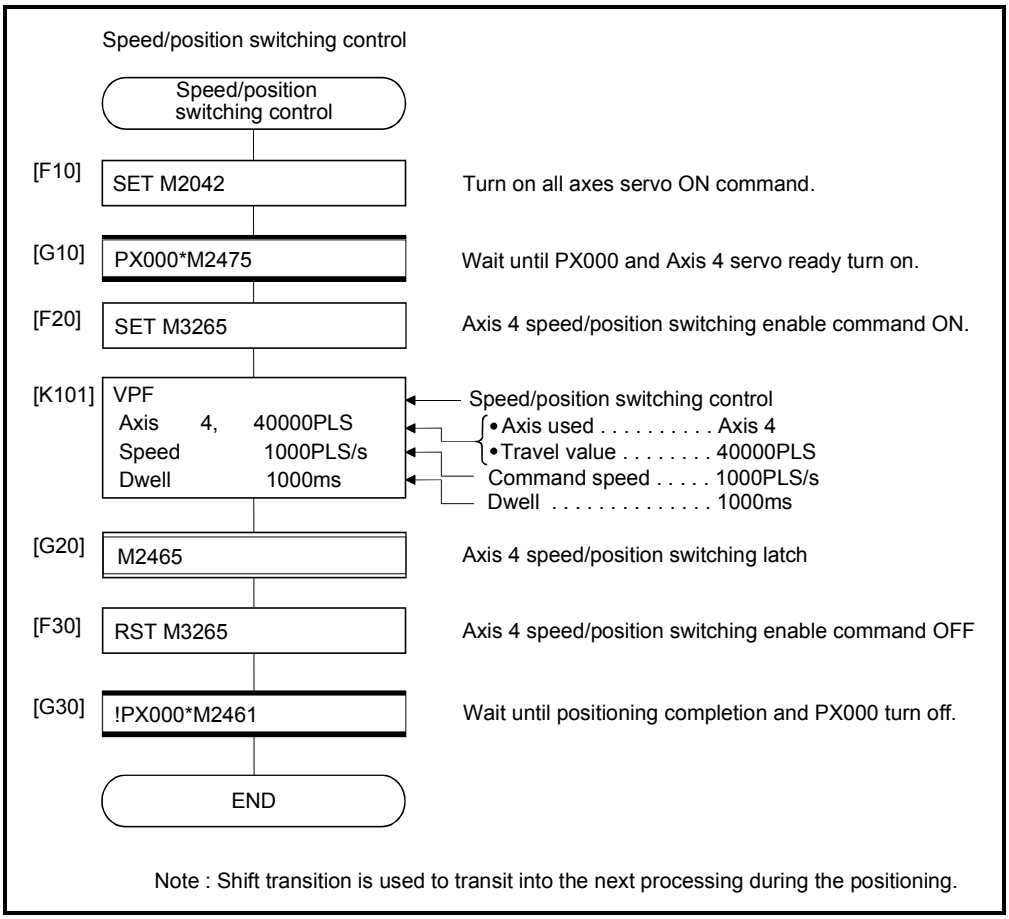

(Note): Example of the above Motion SFC program is started using the automatic start or PLC program.

6.15.2 Re-starting after stop during control

Re-starting (continuing) after stop with stop command during speed/position switching control is executed.
Re-starting uses VPSTART servo instruction.

Servo instruction	Positioning method	Number of control axes	Items are set in peripheral devices																							Speed change
			Common							Arc			Parameter block											Others		
			Parameter block No.	Axis	Address/travel value	Command speed	Dwell time	M-code	Torque limit value	Auxiliary point	Radius	Central point	Control unit	Speed limit value	Acceleration time	Deceleration time	Rapid stop deceleration time	Torque limit value	Deceleration processing on stop input	Allowable error range for circular interpolation	S-curve ratio	Cancel	WAIT-ON/OFF			
VPSTART				○																		△				

○: Must be set
△: Set if required

[Control details]

(1) The continuous control after stop during speed control is executed, after speed/position switching control start.

(2) Re-starting using the VPSTART is effective by stop during speed control or position control.
  (a) Re-starts with the speed control at the stop during speed control, then switches to position control by turning on the CHANGE signal.
    • The control contents after re-starting are same as the speed/position switching control. Refer to Section "6.15.1 Speed/position switching control start".

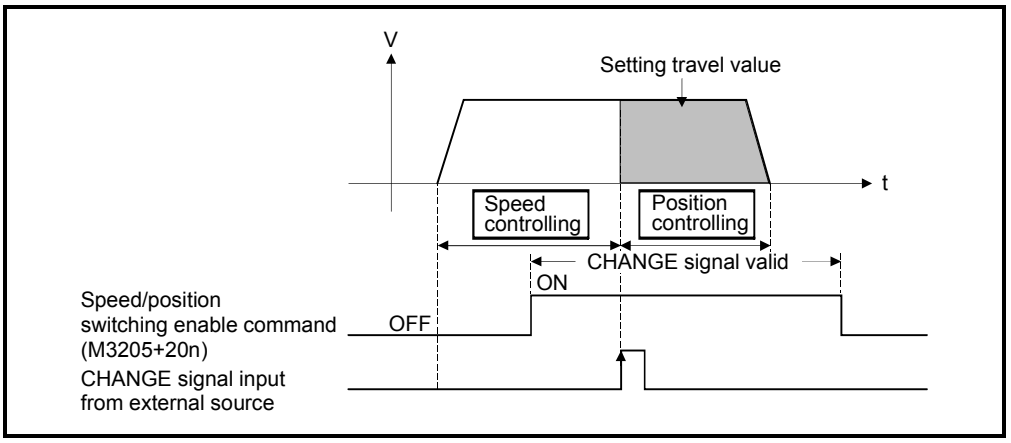

Fig. 6.27 Re-starting during speed control

(b) If the stop occurred during position control, re-start with position, and the positioning control of setting travel value.
The travel value after the re-start is calculated as follows:

Travel value after re-start (P2)	=	Setting travel value(P)	-	Travel value before stop (P1)

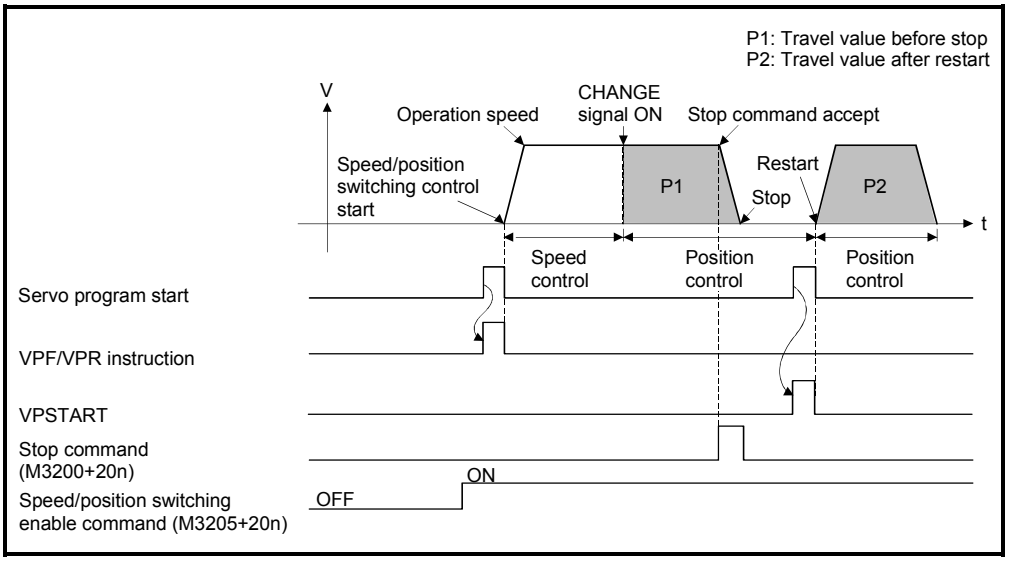

Fig.6.28 Re-starting during speed control

(3) It controls at the speed stored at the VPF/VPR instruction execution in the re-starting.
Therefore, even if the speed change before stop during control, it becomes the speed at the VPF/VPR instruction execution.

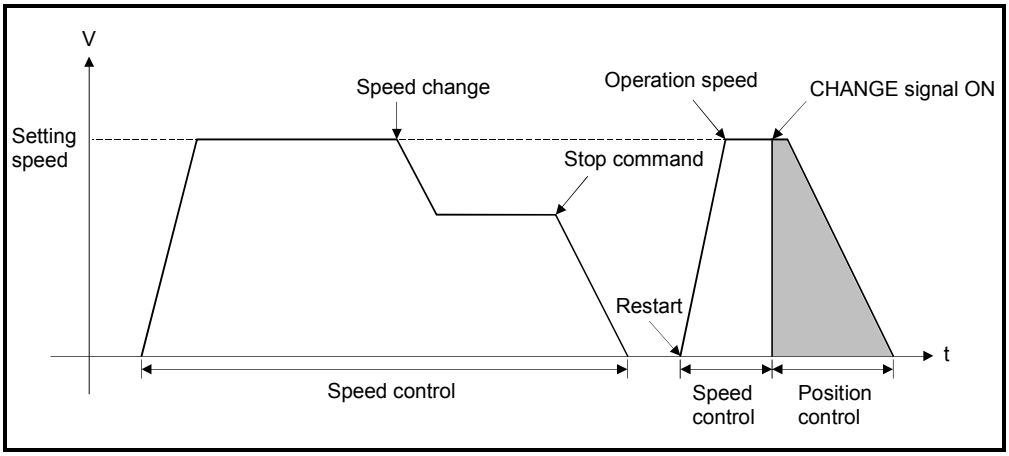

Fig.6.29 Re-starting after speed change

[Program]

Program for restarting after stop during control with the speed/position switching control is shown as the following conditions.

(1) System configuration

Speed/position switching control of Axis 4.

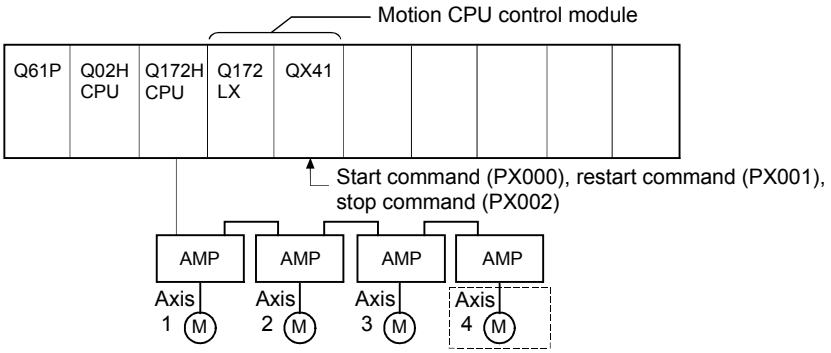

(2) Positioning conditions

(a) Positioning conditions are shown below.

Item	Positioning conditions	
	Speed/position switching control	Restart
Servo program No.	101	102
Control axis	Axis 4	Axis 4
Travel value for positioning control	40000	—
Command speed	1000	—

(b) Positioning start command ..... Turning PX000 off to on (OFF → ON)

(c) Speed/position switching enable command M3265

(d) Re-start command .....Turning PX001 off to on (OFF → ON)

(e) Stop command ..... Turning PX002 off to on (OFF → ON)

(3) Operation timing

Operation timing for speed/position switching control and re-starting are shown below.

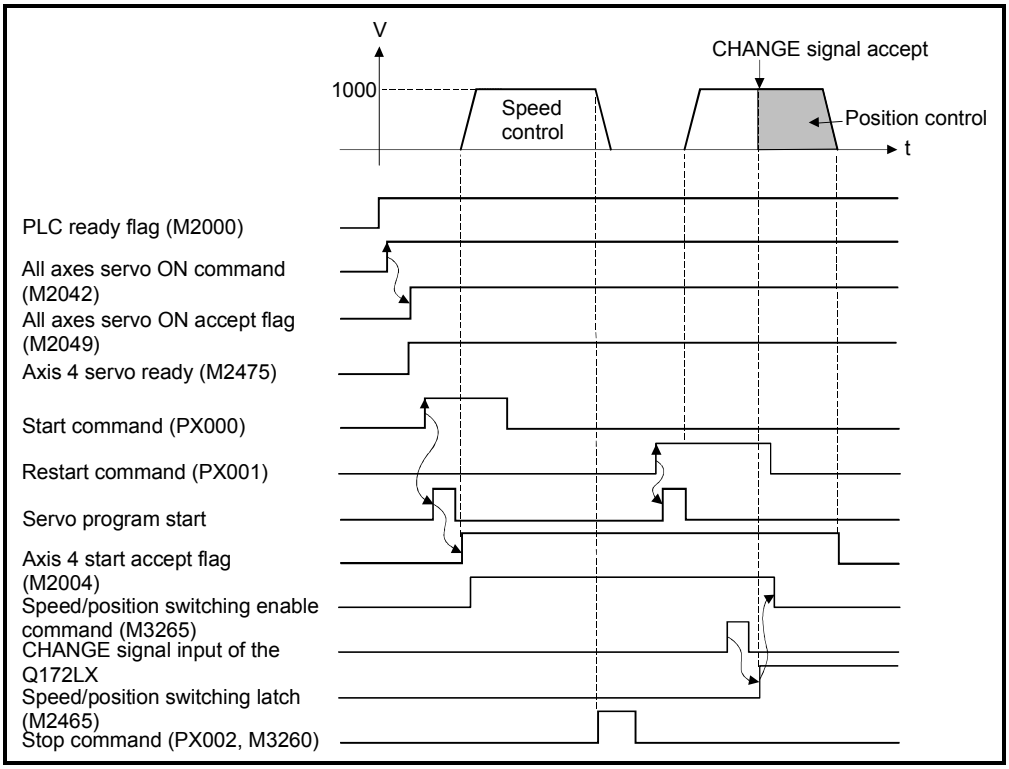

(4) Servo program

Servo program No.101 and No.2 for speed/position control and re-starting are shown below.

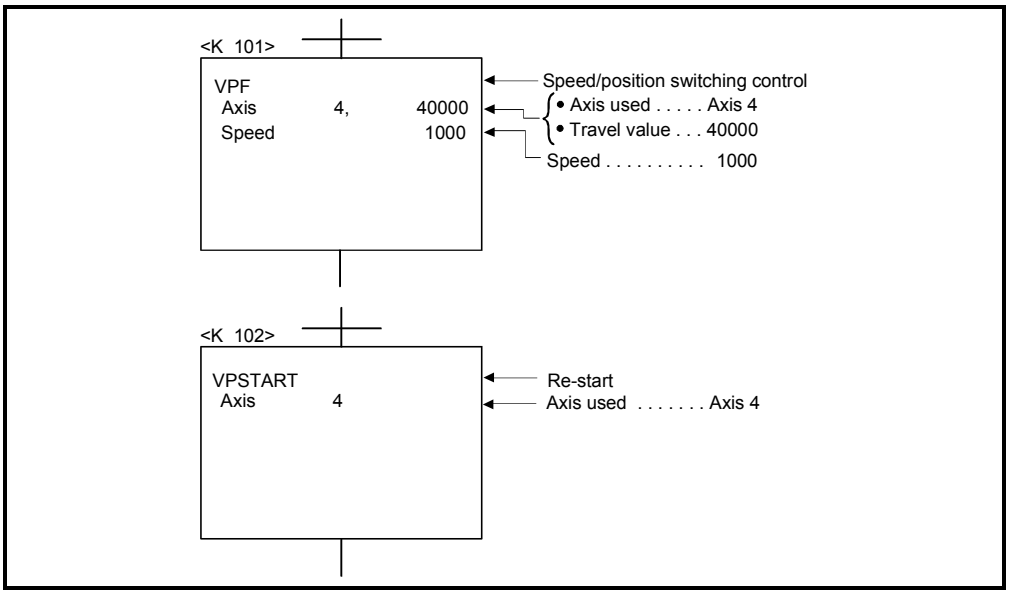

(Note): Example of the Motion SFC program for positioning control is shown next page.

(5) Motion SFC program

Motion SFC program for which executes the servo program is shown below.

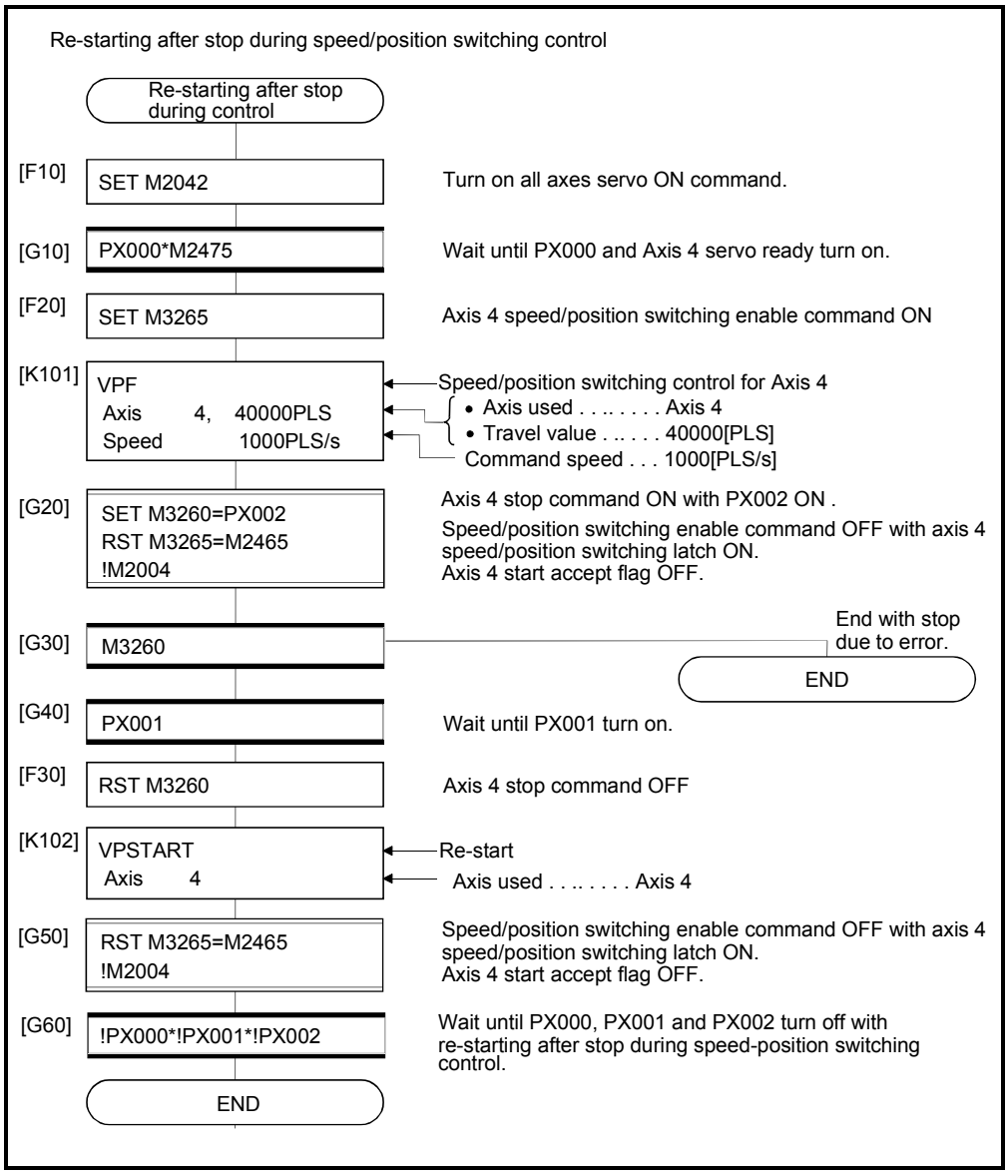

(Note): Example of the above Motion SFC program is started using the automatic start or PLC program.

6.16 Speed-Switching Control

(1) Positioning control performs changing the speed on the point beforehand set by one start.

(2) The speed-switching points and speed are set using the servo program.

(3) Repetition control between any speed-switching points can be performed by using repetition instructions.

(4) M-codes and torque limit values can be changed at each speed-switching point.

6.16.1 Speed-switching control start, speed-switching points and end specification

Servo instruction		Positioning method	Number of control axes	Items are set in peripheral devices																							Speed change
				Common							Arc			Parameter block										Others			
				Parameter block No.	Axis	Address/travel value	Command speed	Dwell time	M-code	Torque limit value	Auxiliary point	Radius	Central point	Control unit	Speed limit value	Acceleration time	Deceleration time	Rapid stop deceleration time	Torque limit value	Deceleration processing on stop input	Allowable error range for circular interpolation	S-curve ratio	Cancel	WAIT-ON/OFF	
Start	VSTART	—	—	△										△	△	△	△	△	△	△		△	△		—
End	VEND																								
End point address	ABS-1	Absolute data	1		○	○	○	△	△	△													△		Valid
	ABS-2		2																						
	ABS-3		3																						
Travel value to end point	INC-1	Incremental	1																						
	INC-2		2																						
	INC-3		3																						
Speed-Switching point	VABS	Absolute data	—			○	○		△	△															—
	VINC	Incremental																							

○: Must be set
△: Set if required

[Control details]

Start and end of the speed-switching control

Speed-switching control is started and ended using the following instructions:

(1) VSTART

Starts the speed-switching control.

(2) VEND

Ends the speed-switching control.

Travel value setting to end address/end point

The travel value to end address/end point with the speed-switching control, positioning control method and positioning speed to the end point are set using the following instructions :

(1) ABS-1/INC-1

Set 1 axis linear positioning control.
The control contents are same as Section 6.2 "1 Axis Linear Positioning Control".

(2) ABS-2/INC-2

Set 2 axes linear interpolation control.
The control contents are same as Section 6.3 "2 Axes Linear Interpolation Control".

(3) ABS-3/INC-3

Set 3 axes linear interpolation control.
The control contents are same as Section 6.4 "3 Axes Linear Interpolation Control".

Speed-switching point setting

The address (travel value) of the speed-switching point and the positioning speed are set using the following instructions:

(1) VABS

Set the speed-switching point using the absolute data method.

(2) VINC

Set the speed-switching point using the incremental data method.

POINT

The axis which set the speed-switching point (travel value) and positioning speed by 2 or 3 axes linear interpolation control is first set in the "travel value to end address/end point".

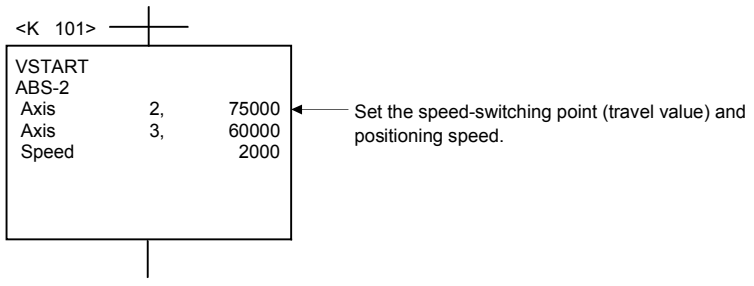

Procedure of the servo program and operation timing

Servo programs for speed-switching control and the operation timing are shown below.

[Servo program]

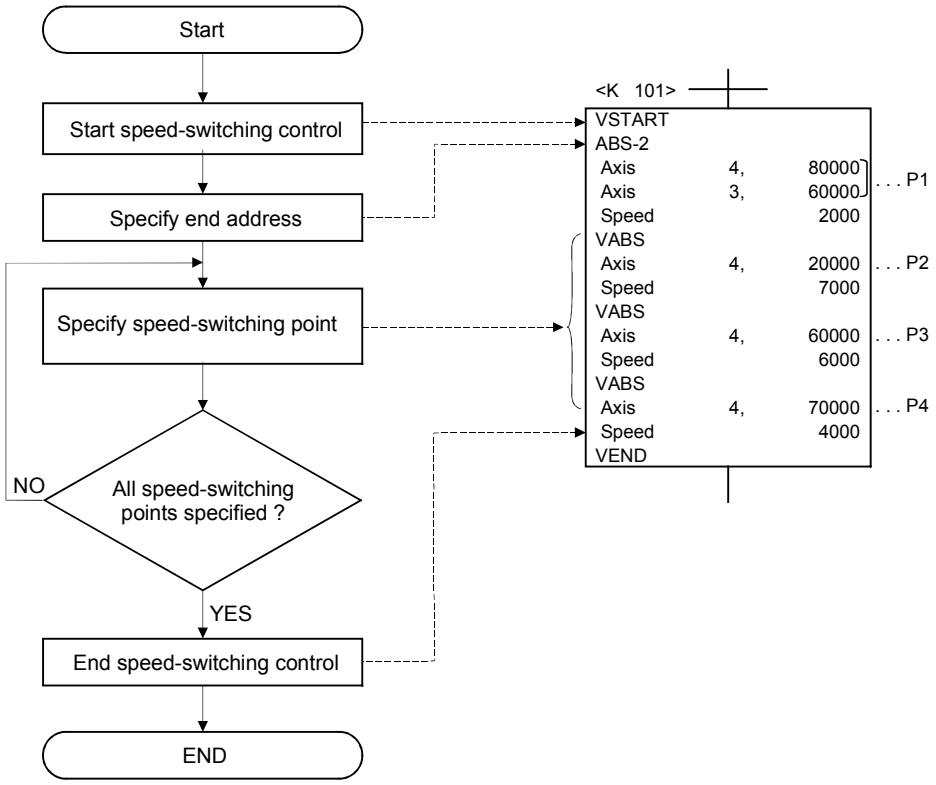

[Operation timing]

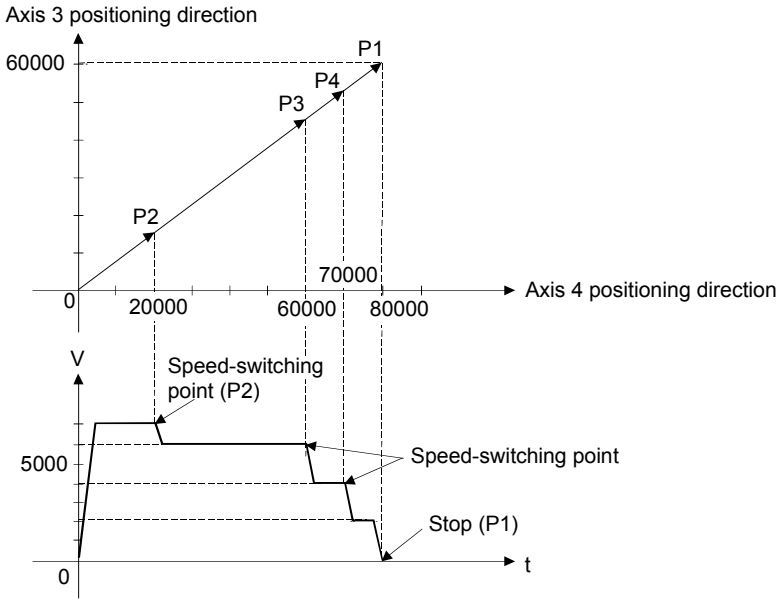

[Cautions]

(1) The number of control axes cannot be changed during control.

(2) The speed-switching point can be specified the absolute data method (VABS□) and incremental data method (VINC□) by mixed use.

(3) The speed-switching point cannot be specified an address which change in travel direction. If the travel direction change, the error code [215] is stored in the minor error storage register for each axis and the deceleration stop is performed.

(4) It checks whether to be the end address within the stroke limit range at the start. If it is positioning to outside the stroke limit range, the error code [106] is stored in the minor error storage register for each axis and operation does not start.

(5) If the travel value between speed-switching points is so short and it shifts to the next speed-switching point during speed-switching control, the speed-switching does not perform.

(6) If the M-code from the previous point is retained in the point with which M-code is not specified.

[Program]

Program for speed-switching is shown as the following conditions.

(1) System configuration

Speed-switching control of Axis 2 and Axis 3.

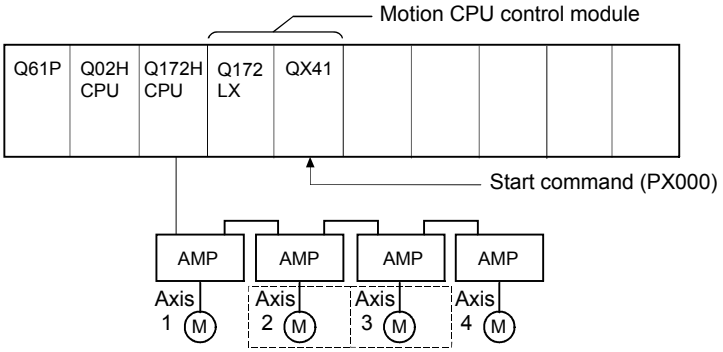

(2) Positioning conditions

(a) Speed-switching control conditions are shown below.

Item	Setting	
Servo program No.	500	
Control axis	Axis 2	Axis 3
End address	100000	50000

(b) Speed-switching control start command ..... Turning PX000 off to on (OFF → ON)

(3) Operation timing and speed-switching positions

Operation timing and speed-switching points for speed-switching control are shown below.

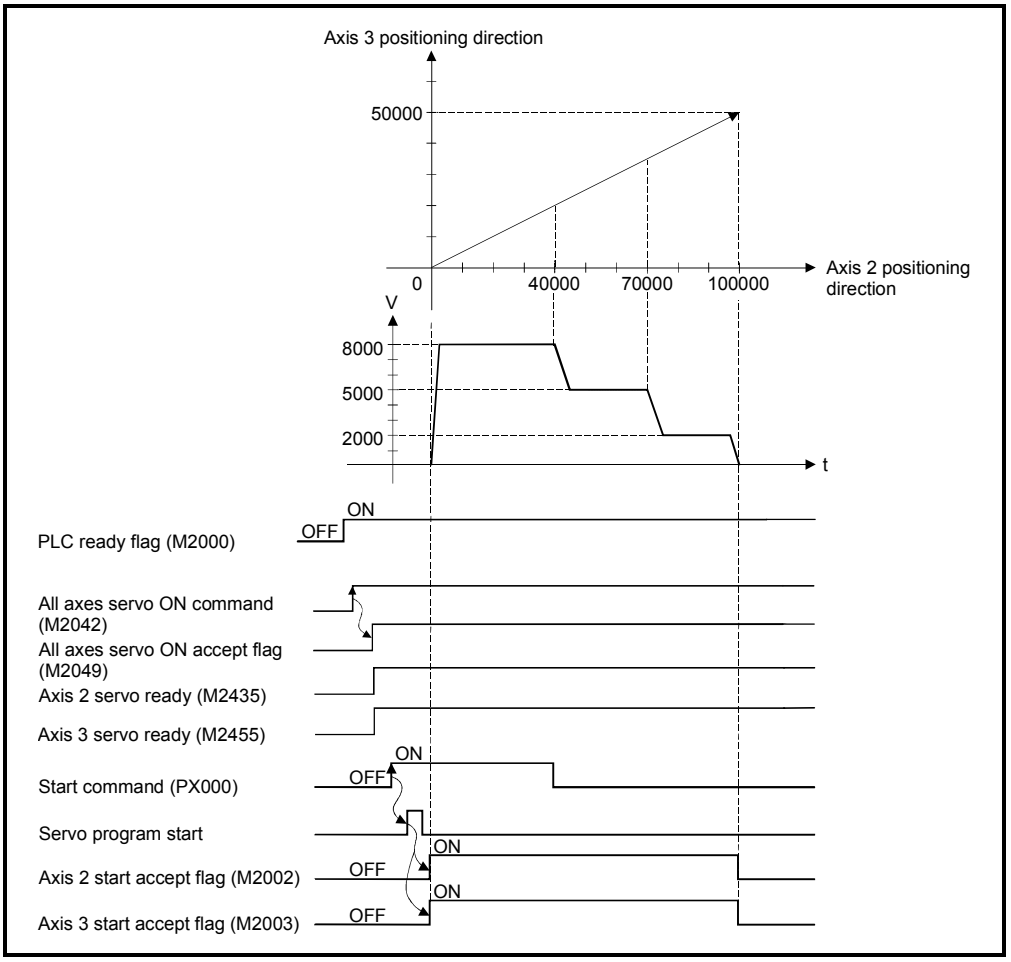

(4) Servo program

Servo program No.500 for speed-switching control is shown below.

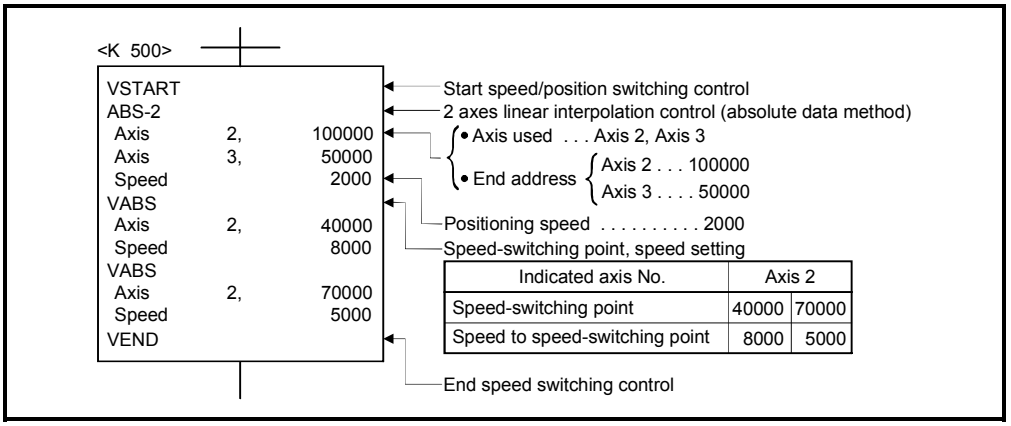

Indicated axis No.	Axis 2	
Speed-switching point	40000	70000
Speed to speed-switching point	8000	5000

(Note): Example of the Motion SFC program for positioning control is shown next page.

(5) Motion SFC program

Motion SFC program for which executes the speed-switching control is shown below.

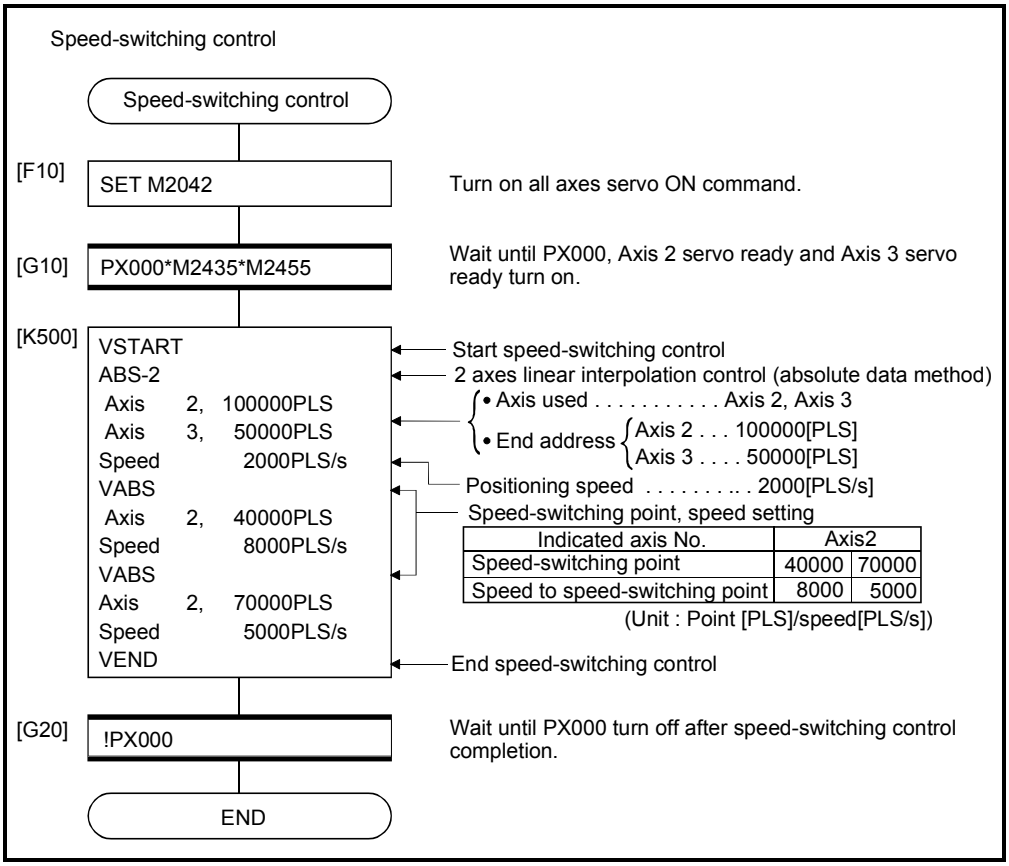

(Note): Example of the above Motion SFC program is started using the automatic start or PLC program.

6.16.2 Specification of speed-switching points using repetition instructions

Repetition execution between any speed-switching points.

Servo instruction	Positioning method	Number of control axes	Items are set in peripheral devices																								Speed change
			Common							Arc			Parameter block											Others			
			Parameter block No.	Axis	Address/travel value	Command speed	Dwell time	M-code	Torque limit value	Auxiliary point	Radius	Central point	Control unit	Speed limit value	Acceleration time	Deceleration time	Rapid stop deceleration time	Torque limit value	Deceleration processing on stop input	Allowable error range for circular interpolation	S-curve ratio	Repeated condition	Cancel	WAIT-ON/OFF	
FOR-TIMES	–	–																				○			–
FOR-ON																									
FOR-OFF																									
NEXT	–	–																							

○: Must be set
△: Set if required

[Control details]

First repetition range setting

The first repetition range is set using the following instructions:

(1) FOR-TIMES (number of loops setting)

(a) The repetition range set specified number of times is executed repeatedly.

(b) The setting range is 1 to 32767.
Outside the range of 32768 to 0 is controlled as a setting of "1".

(c) The following devices can be used as the repetition number of times:
1) Data register (D)
2) Link register (W)
3) Motion register (#)
} For indirect setting
4) Decimal constant (K)
5) Hexadecimal constant (H)

(2) FOR-ON (loop-out trigger condition setting)

(a) The repetition range set until the specified bit device turns on is executed repeatedly.

(b) The following devices are used as the loop-out trigger condition:
1) Input (X/PX)
2) Output (Y/PY)
3) Internal relay (M)/Special relay (SP.M)
4) Latch relay (L)
5) Link relay (B)
6) Annunciator (F)

(3) FOR-OFF (loop-out trigger condition setting)

(a) The repetition range set until the specified bit device turns off is executed repeatedly.

(b) The following devices are used as the loop-out trigger condition:

1) Input (X/PX)
2) Output (Y/PY)
3) Internal relay (M)/Special relay (SP.M)
4) Latch relay (L)
5) Link relay (B)
6) Annunciator (F)

Operation of the repetition control using FOR-TIMES, FOR-ON, and FOR-OFF is shown below.

[Servo program]

```
<K 701>
VSTART
INC-2
 Axis      1,      230000
 Axis      2,       10000
 Speed              2000
VINC
 Axis      1,       40000
Speed               2000
 1)
                     2)
VINC
 Axis      1,       30000
Speed                500
VINC
 Axis      1,       20000
 Speed              1000
NEXT
VEND
```

3)

1)	2)		
	Condition 1	Condition 2	Condition 3
FOR-TIMES	K1	K2	K3
FOR-ON	X010 → ON from start	X010 → ON during first execution of 3)	X010 → ON during third execution of 3)
FOR-OFF	X011 → OFF from start	X011 → OFF during first execution of 3)	X011 → OFF during third execution of 3)

(1) Operation in condition 1

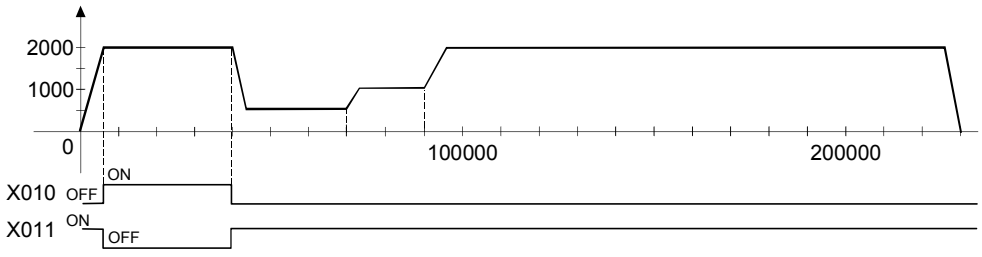

(2) Operation in condition 2

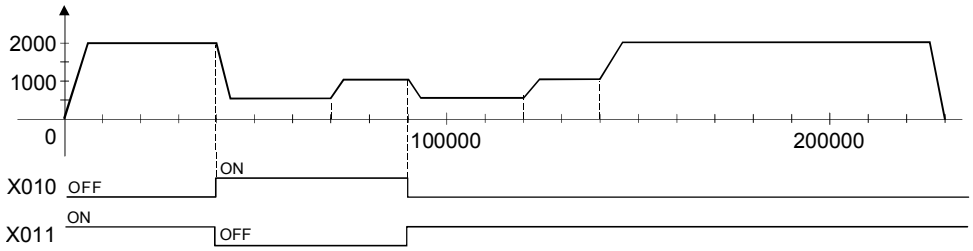

(3) Operation in condition 3

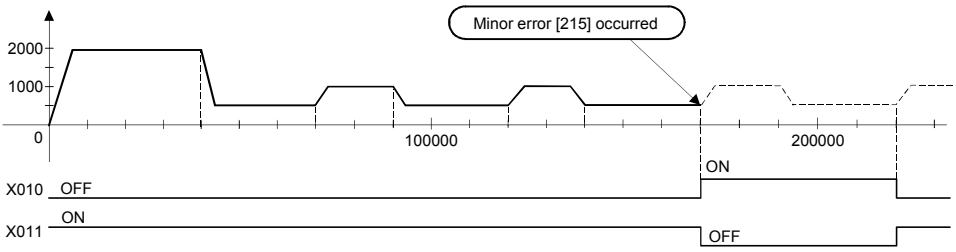

Error occurs because it exceeds the travel value to the stop position.

[Program]

Program for repetition speed-switching control is shown as the following conditions.

(1) System configuration

Speed-switching control of Axis 2 and Axis 3.

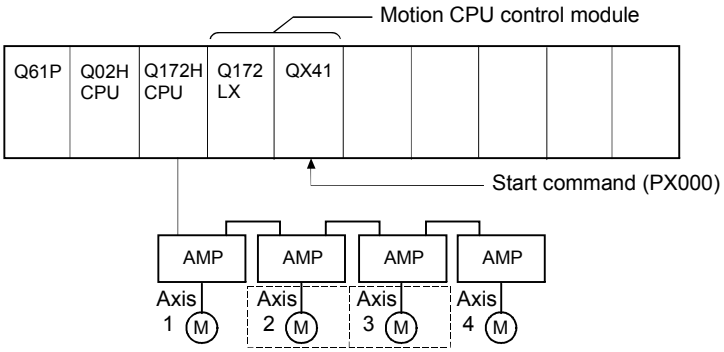

(2) Positioning conditions

(a) Speed-switching control conditions are shown below.

Item	Setting	
Servo program No.	501	
Control axes	Axis 2	Axis 3
End address	230000	100000

(b) Speed-switching control start command ..... Turning PX000 off to on (OFF → ON)

(3) Operation timing and speed-switching positions

Operation timing and speed-switching points for speed-switching control are shown below.

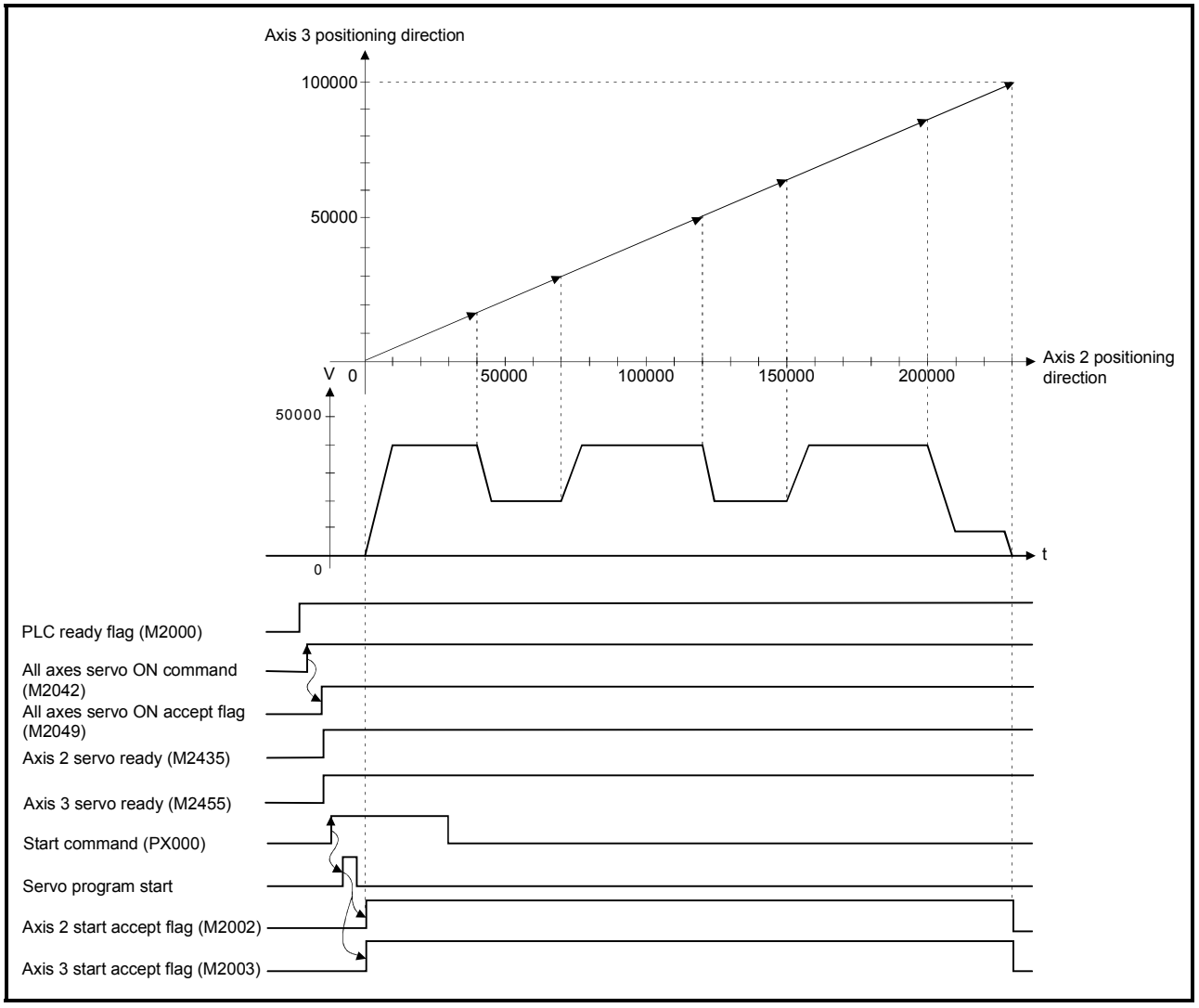

(4) Servo program

Servo program No. 501 for speed-switching control by the repetition instruction is shown below.

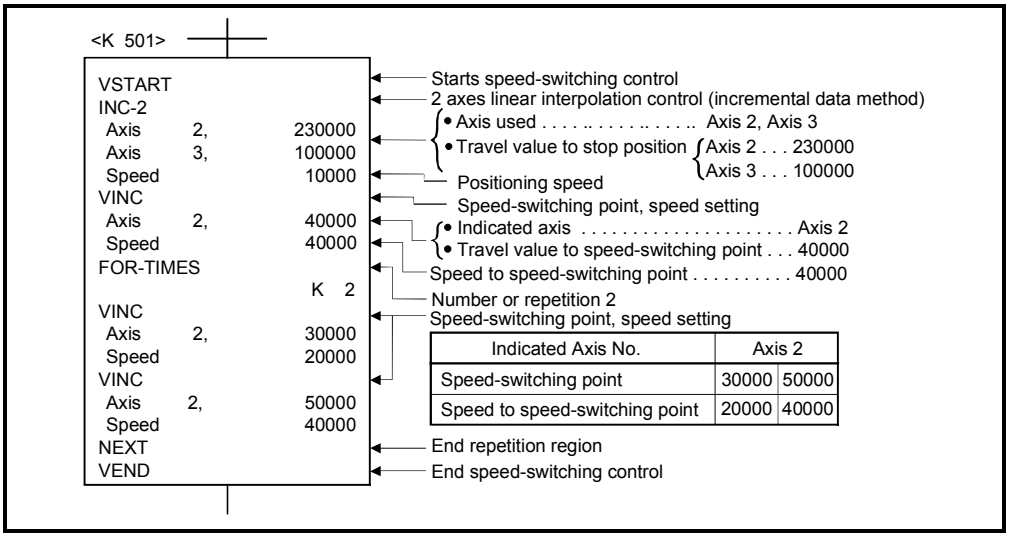

Indicated Axis No.	Axis 2	
Speed-switching point	30000	50000
Speed to speed-switching point	20000	40000

(Note): Example of the Motion SFC program for positioning control is shown next page.

(5) Motion SFC program

Motion SFC program for which executes speed-switching control using repetition instructions is shown below.

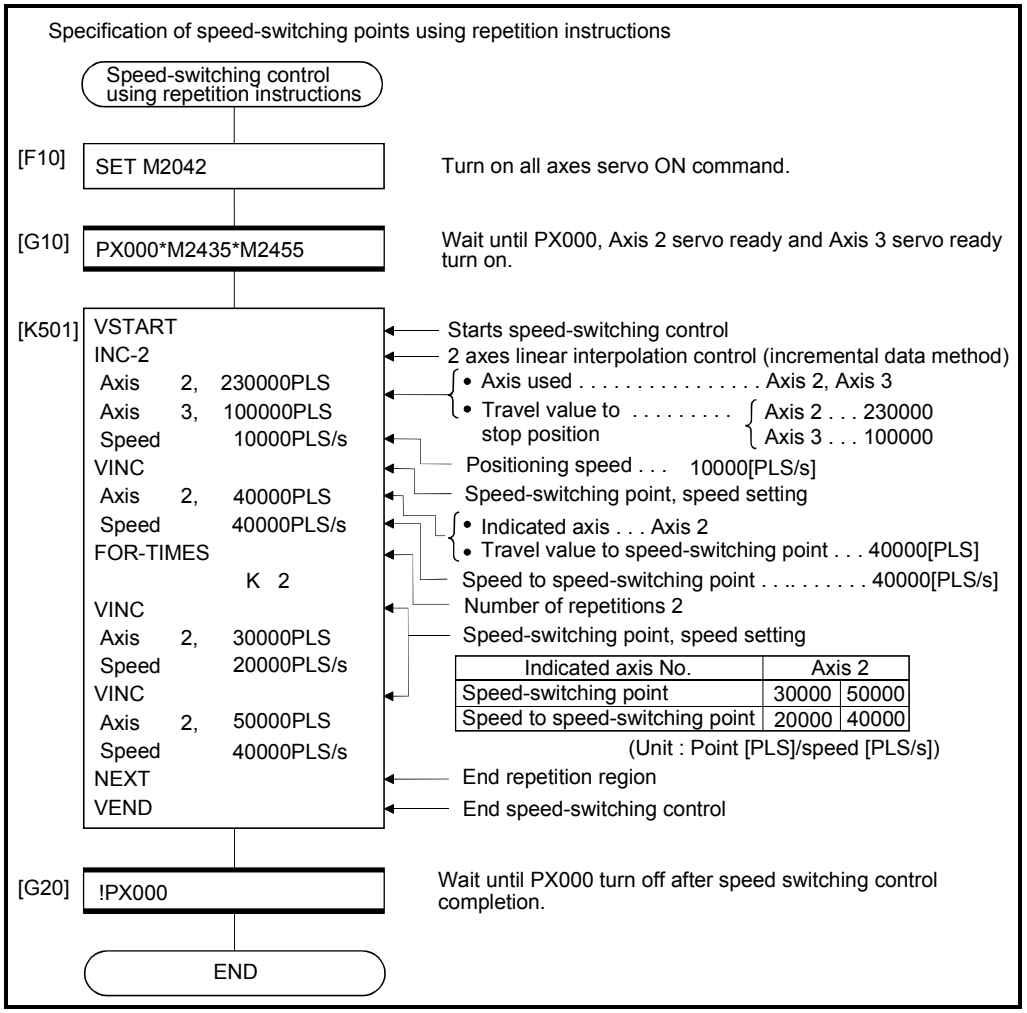

(Note): Example of the above Motion SFC program is started using the automatic start or PLC program.

6.17 Constant-Speed Control

(1) Positioning to the pass point beforehand set by one starting is executed with the specified positioning method and positioning speed.

(2) The positioning method and positioning speed can be changed for each pass point.

(3) The following parameters is set in the servo program.
- Pass point
- Positioning method from any pass point to the next pass point.
- Positioning speed from any pass point to the next pass point.

(4) Repetition control between any pass points can be performed by using repetition instructions.

(5) M-codes and torque limit values can be changed at each speed-switching point.

(6) 1 to 4 axes can be controlled.

[Procedure to write servo programs]

The method to write the servo programs for constant-speed control is shown below.

[Procedure] [Example : Servo program for 2 axes constant-speed control]

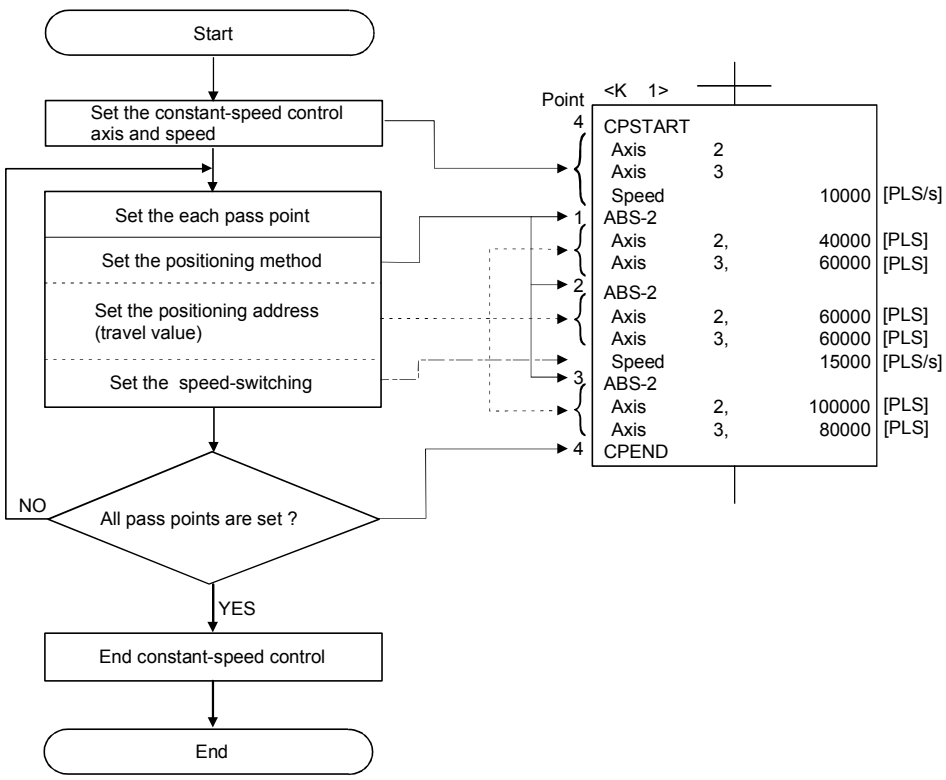

[Operation timing]

Operation timing for constant-speed control is shown below.

[Example : Operation timing for 2 axes constant-speed control]

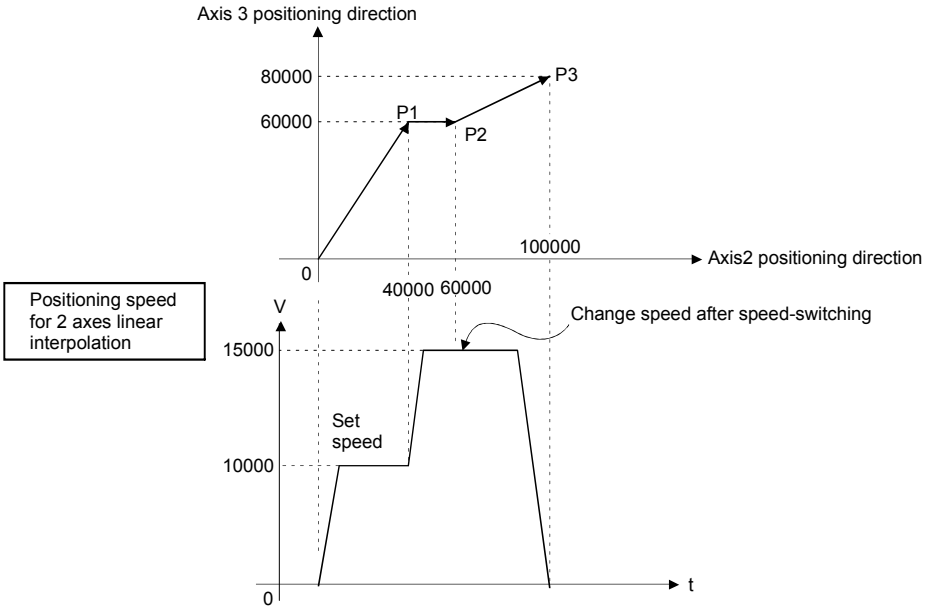

[Caution]

(1) The number of control axes cannot be changed during control.

(2) The pass point can be specified the absolute data method (ABS□) and incremental method (INC□) by mixed use.

(3) The pass point can also be specified an address which change in travel direction. The acceleration processing at a pass point is executed for 1 axis constant-speed. However, the acceleration/deceleration processing at a pass point is not executed for 2 to 4 axes constant-speed, so be careful of the servo error occurrence, etc.

(4) Speed change is possible after the start.
Note the following points at the speed change.
(a) The central point-specified circular interpolation is included the constant-speed control.
When the arc path calculated from the start address and central-point address is differ (within the allowable error range for circular interpolation) from the setting end address, if the speed is changed, error compensation (Refer to Section 4.3.3) may not function normally.
When the central point-specified circular interpolation as positioning method is used at the constant-speed control, set the start address, central point address and end address becomes arc correctly.

(b) The speed switching and change speed by CHGV instruction are executed toward the same program in the servo program.
The lower of the speed change by CHGV instructions and the command speed in the servo program is selected.
The speed change by CHGV instructions are executed if the speed is lower than the speed set in the servo program; otherwise the CHGV instructions are not executed.

1) Change speed by CHGV instruction > command speed in the servo program
The command speed in the servo program is selected.

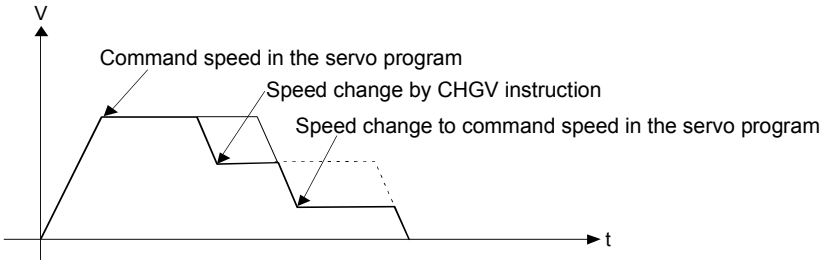

2) Change speed by CHGV instruction < command speed in the servo program
The change speed by CHGV instructions is effective.

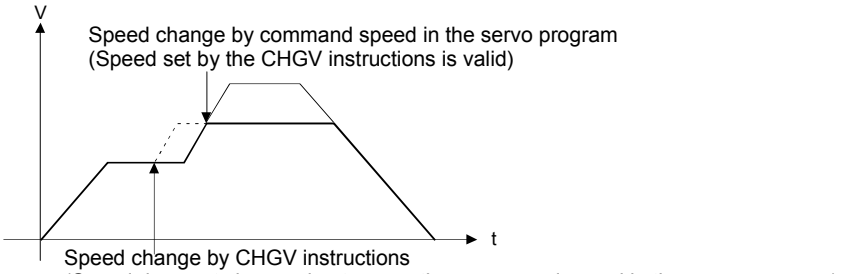

(5) An overrun occurs if the distance remaining to the final positioning point when the final positioning point is detected is less than the deceleration distance at the positioning speed after the start (command speed).
The error code [211] (overrun error) is stored in the minor error storage register for each axis.

(6) If positioning to outside the stroke limit range is executed after the start, the error code [106] is stored in the minor error storage register for each axis and a deceleration stop is executed.

(7) The minimum travel value between constant-speed control pass points is shown below:

Command speed per second (control unit/s) × Main cycle [s] < Travel distance [PLS]

Example) Main cycle: 20[ms], Command speed: 600[mm/min]
If the command speed (600[mm/min]) is divided by 60, the command speed per second is 10[mm/s], and if the main cycle (20[ms]) is divided by 1000, the main cycle is 0.02[s].
Therefore, the travel distance is as follow.

10[mm/s] × 0.02[s] = 0.2[mm]

Set the travel distance to more than 0.2[mm].

Positioning speed drops if the distance between pass points is short the minimum travel value.

6.17.1 Specification of pass points by repetition instructions

This section describes the method of the pass points for which executes between any pass points repeatedly.

Servo instruction	Positioning method	Number of control axes	Items are set in peripheral devices																								Speed change
			Common							Arc			Parameter block											Others			
			Parameter Block No.	Axis	Address/Travel Value	Command speed	Dwell Time	M Code	Torque Limit Value	Auxiliary Point	Radius	Central point	Control Unit	Speed Limit Value	Acceleration Time	Deceleration Time	Rapid Stop Deceleration Time	Torque Limit Value	Deceleration Processing on Stop Input	Allowable Error Range for Circular Interpolation	S- Curve Ratio	Repeated Condition	Cancel	WAIT-ON/OFF	
FOR-TIMES	_	_																									_
FOR-ON																						○					
FOR-OFF																											
NEXT	_	_																									

○: Must be set
△: Set if required

[Control details]

Setting the first of repetition range

The first of repetition range is set by the following instructions:

(1) FOR-TIMES (number of loops setting)

(a) The repetition range set specified number of times is executed repeatedly.

(b) The setting range is 1 to 32767.
Outside the range of 32768 to 0 is controlled as a setting of "1".

(c) The following devices can be used as the repetition number of times:
1) Data register (D)
2) Link register (W)
3) Motion register (#)
} For indirect setting
4) Decimal constant (K)
5) Hexadecimal constant (H)

(2) FOR-ON (Loop-out trigger condition setting)

(a) The repetition range set until the specified bit device turns on is executed repeatedly.

(b) The following devices are used as the loop-out trigger condition :
1) Input (X/PX)
2) Output (Y/PY)
3) Internal relay (M)/Special relay (SP.M)
4) Latch relay (L)
5) Link relay (B)
6) Annunciator (F)

(3) FOR-OFF (loop-out trigger condition setting)

(a) The repetition range set until the specified bit device turns off is executed repeatedly.

(b) The following devices are used as the loop-out trigger condition:

1) Input (X/PX)
2) Output (Y/PY)
3) Internal relay (M)/Special relay (SP.M)
4) Latch relay (L)
5) Link relay (B)
6) Annunciator (F)

The repetition control operation using FOR-TIMES, FOR-ON and FOR-OFF is shown below.

[Servo program]

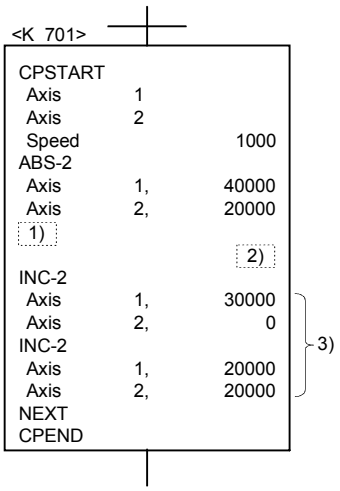

1)	2)		
	Condition 1	Condition 2	Condition 3
FOR-TIMES	K1	K2	K3
FOR-ON	X010 → ON during first positioning 3)	X010 → ON during second positioning 3)	X010 → ON during third positioning 3)
FOR-OFF	X011 → OFF during first positioning 3)	X011 → OFF during second positioning 3)	X011 → OFF during third positioning 3)

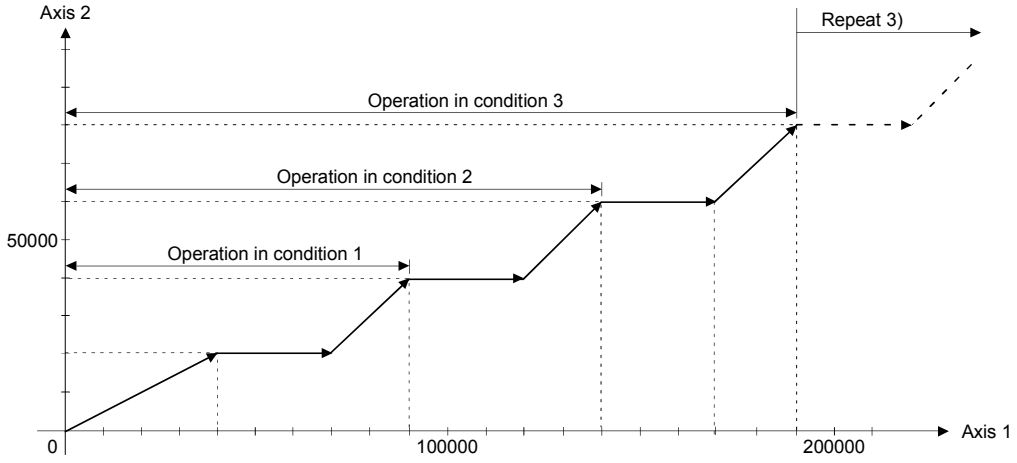

[Program]

Program for repetition constant-speed control is shown as the following conditions.

(1) System configuration

Constant-speed control for Axis 2 and Axis 3.

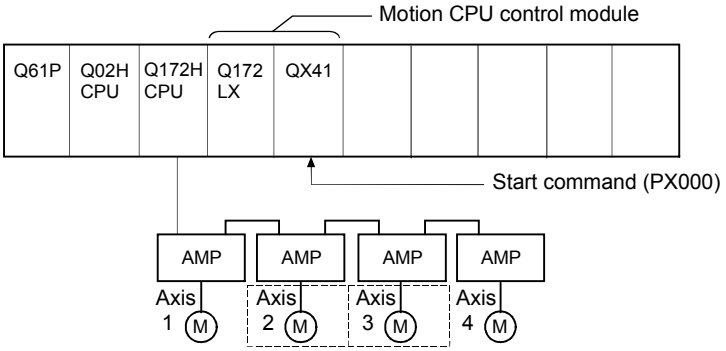

(2) Positioning conditions

(a) Constant-speed control conditions are shown below.

Item	Setting
Servo program No.	510
Control axis	Axis 2, Axis 3
Positioning speed	10000

(b) Constant-speed control start command ..... Turning PX000 off to on (OFF → ON)

(3) Operation timing

Operation timing for constant-speed control is shown below.

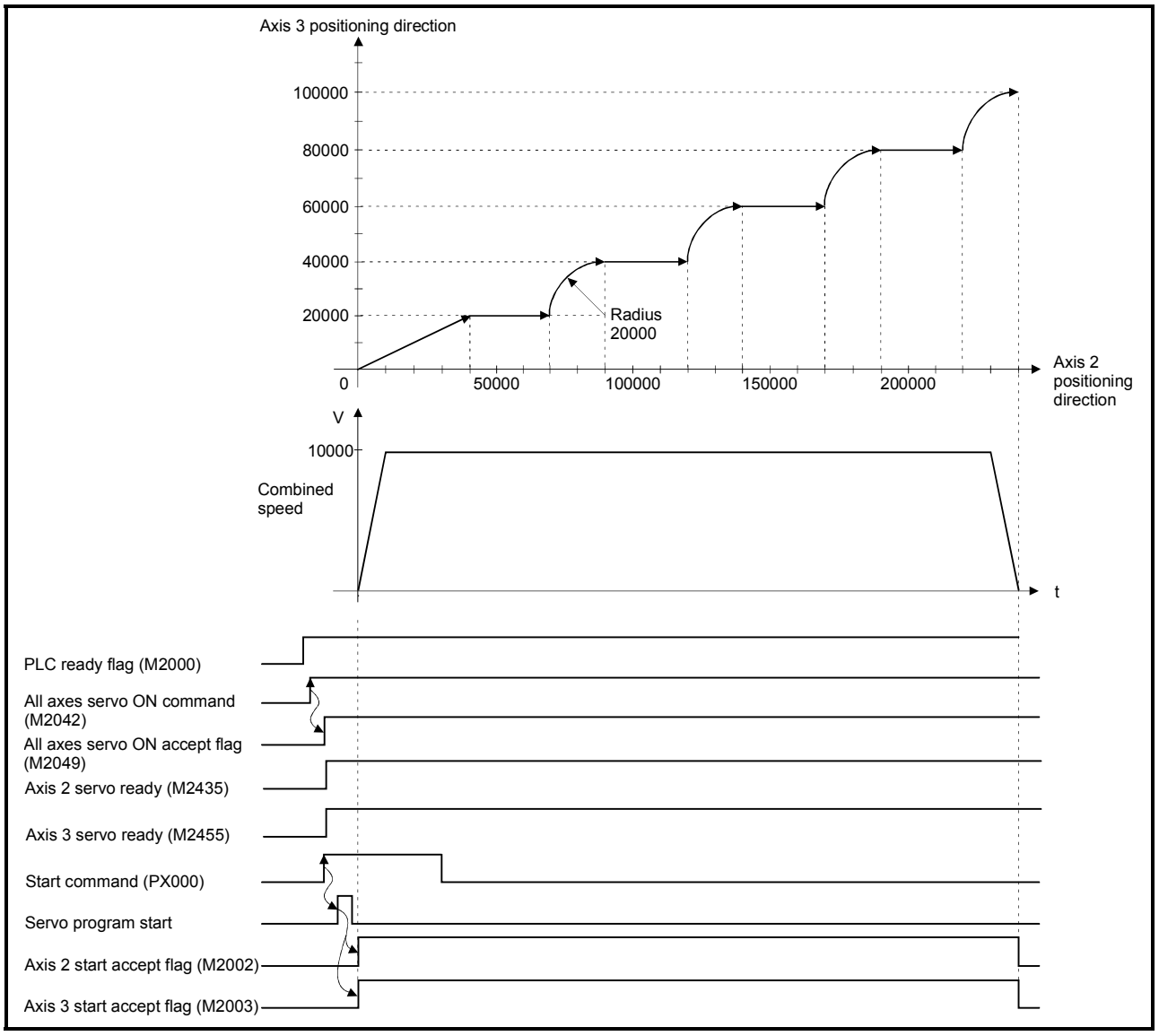

(4) Servo program

Servo program No.510 for constant-speed control is shown below.

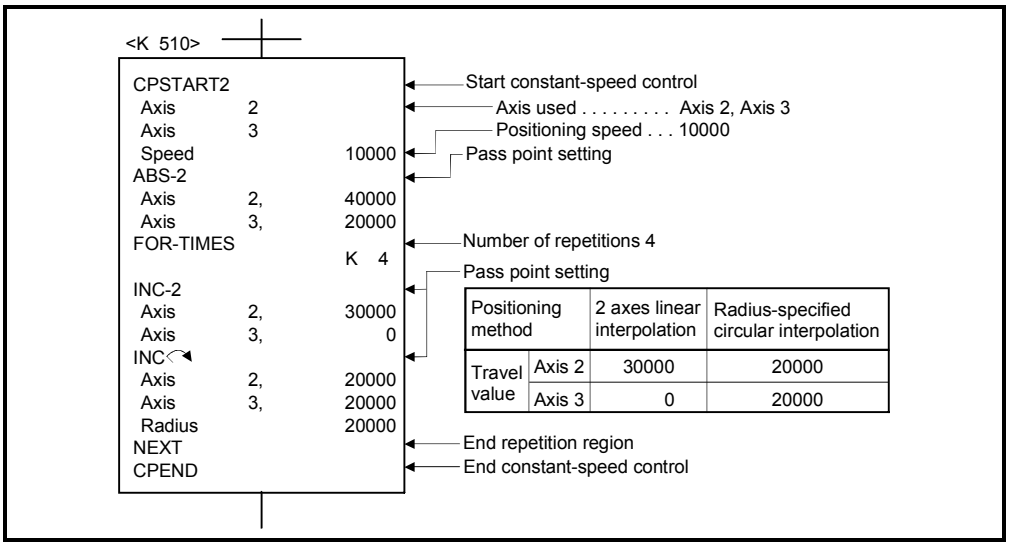

Positioning method		2 axes linear interpolation	Radius-specified circular interpolation
Travel value	Axis 2	30000	20000
	Axis 3	0	20000

(5) Motion SFC program

Motion SFC program for which executes the servo program is shown below.

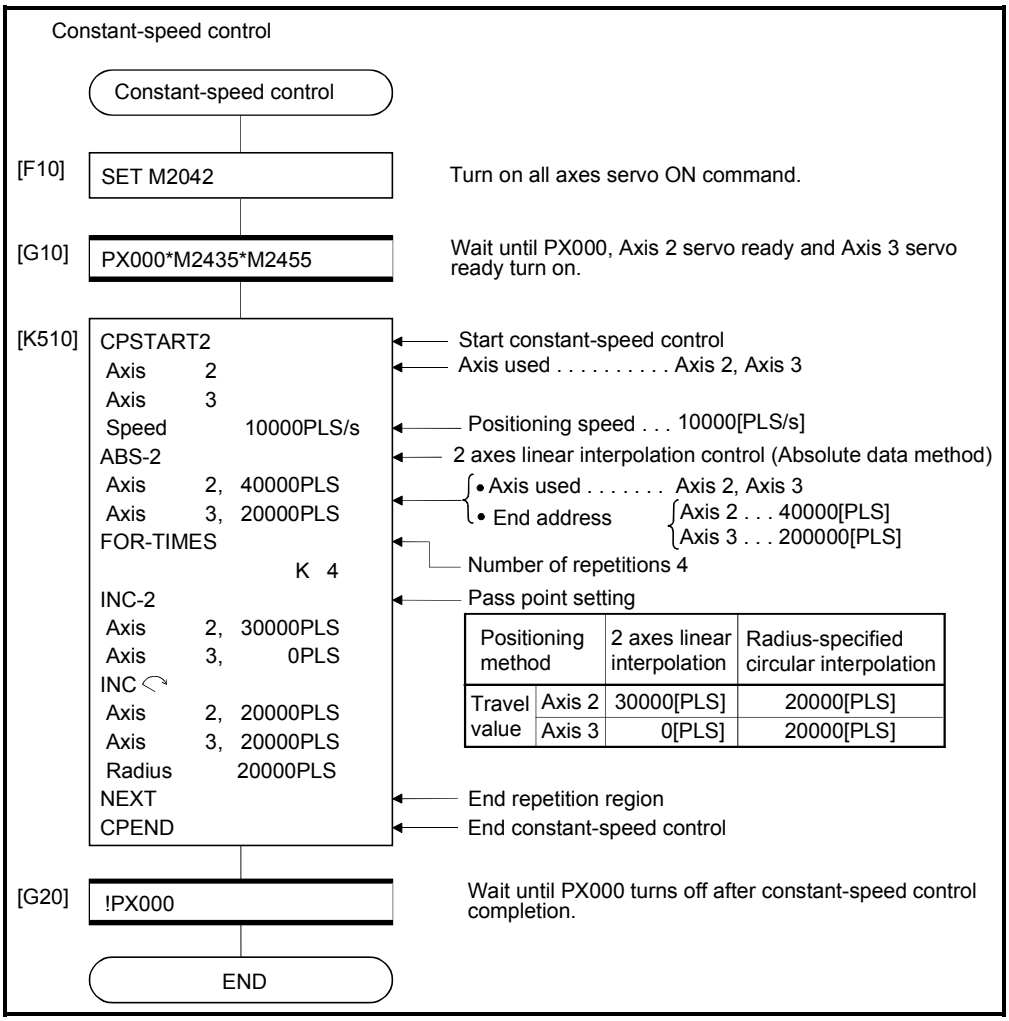

Positioning method		2 axes linear interpolation	Radius-specified circular interpolation
Travel value	Axis 2	30000[PLS]	20000[PLS]
	Axis 3	0[PLS]	20000[PLS]

(Note): Example of the above Motion SFC program is started using the automatic start or PLC program.

6.17.2 Speed-switching by instruction execution

The speed can be specified for each pass point during the constant-speed control instruction.
The speed change from a point can be specified directly or indirectly in the servo program.

[Cautions]

(1) The speed switching during servo instruction is possible at the constant-speed control for 1 to 4 axes.

(2) The speed command can be set for each point.

(3) By turning on the speed-switching point specified flag M2040 (Refer to Section 3.1.3) before the start, the point which completes speed change can be specified.
The speed change timing at the flag ON/OFF.

(a) M2040 is OFF

The speed change starts with the specified speed-switching point.

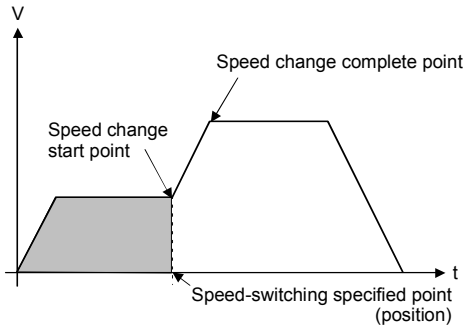

(b) M2040 is ON

The speed change ends with the specified speed-switching point.

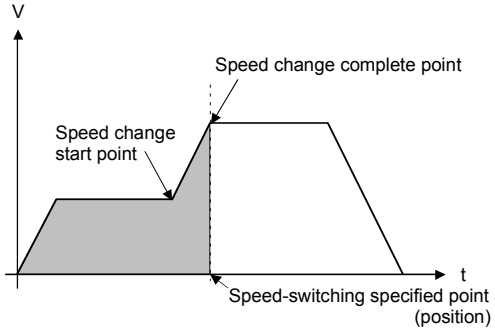

[Program]

Program for which executes the speed-switching control by turning on M2040 during constant-speed instruction is shown as the following conditions.

(1) System configuration

Switches speed for Axis 1 and Axis 2.

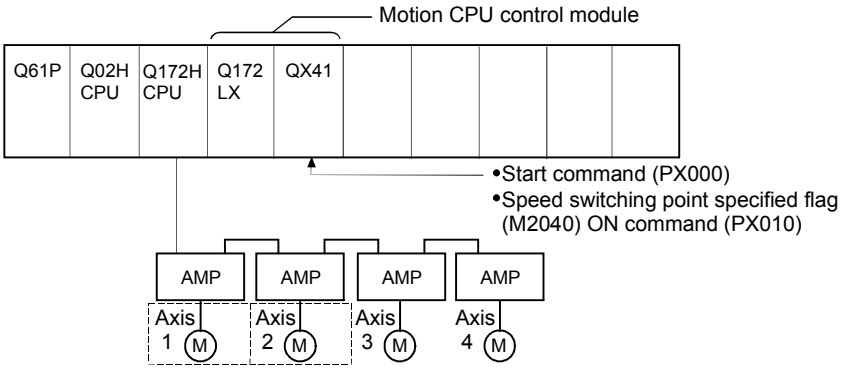

(2) Positioning conditions

(a) Speed switching conditions are shown below.

Item		Setting			
Servo program No.		310			
Positioning speed		10000		15000	
Positioning method		2 axes linear interpolation	Central point-specified circular interpolation	2 axes linear interpolation	2 axes linear interpolation
Pass point	Axis 1	20000	30000	40000	50000
	Axis 2	10000	20000	25000	40000

(b) The constant-speed start command for speed switching

.....Turning PX000 off to on (OFF → ON)

(3) Operation timing and speed-switching positions

Operation timing and positions for speed switching are shown below.

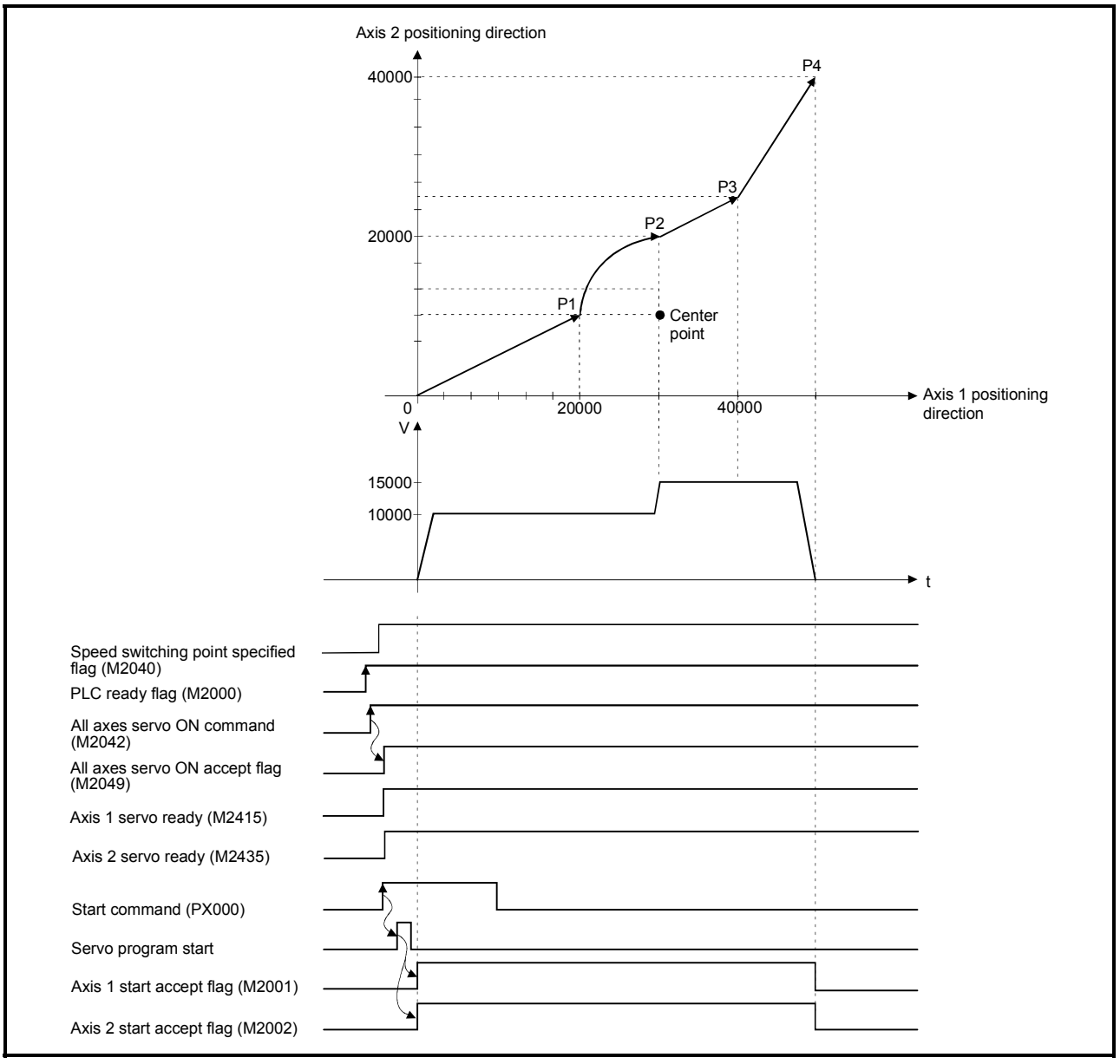

(4) Servo program

Servo program No.310 for speed-switching is shown below.

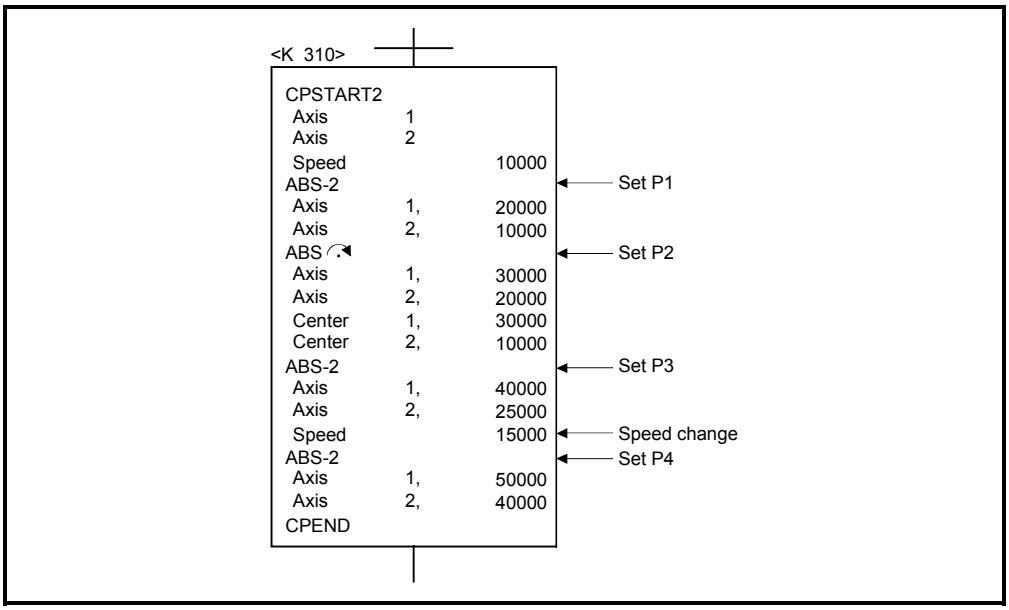

(Note): Example of the Motion SFC program for positioning control is shown next page.

(5) Motion SFC program

Motion SFC program for which executes the servo program is shown below.

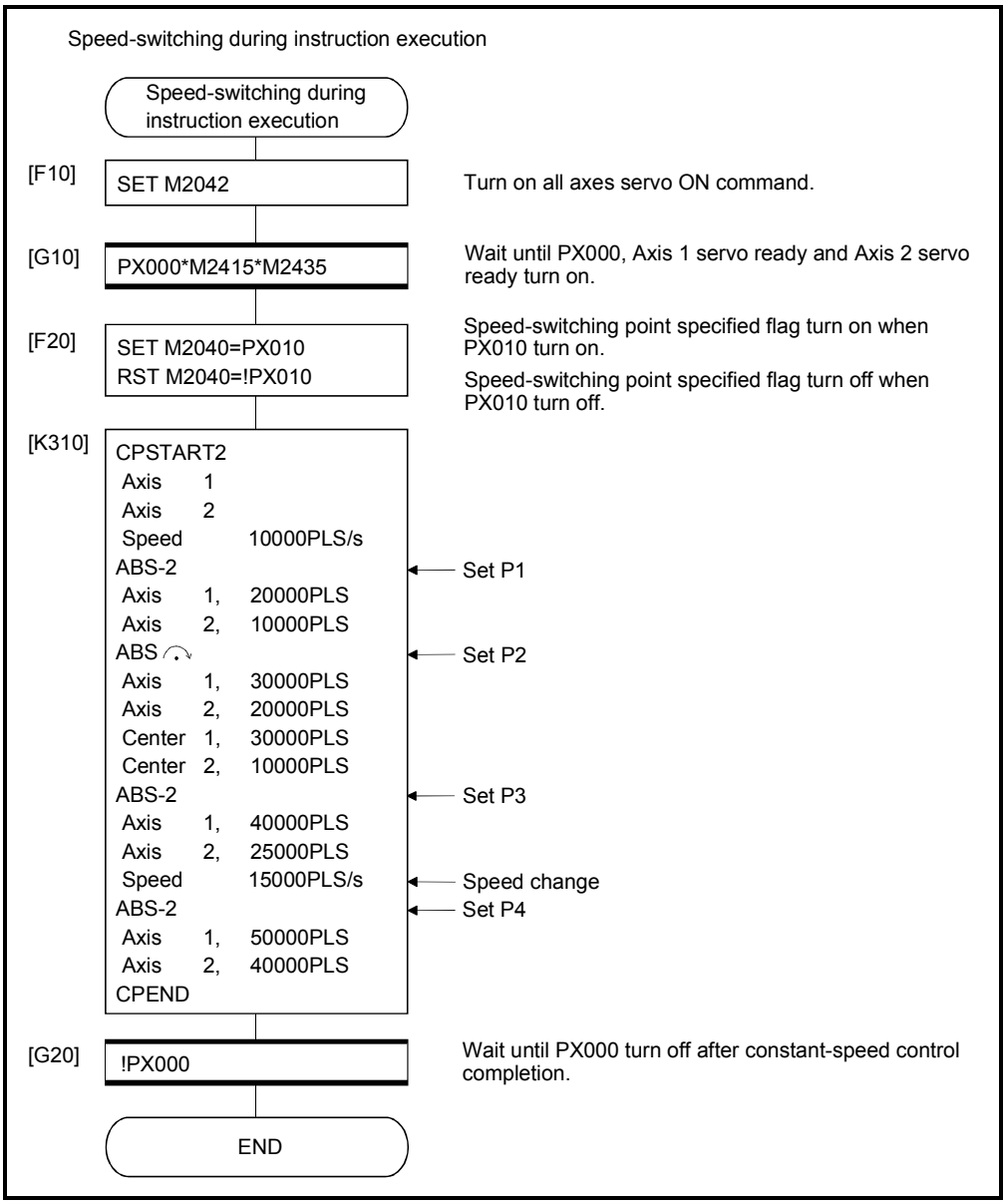

(Note): Example of the above Motion SFC program is started using the automatic start or PLC program.

6.17.3 1 axis constant-speed control

Servo instruction		Positioning method	Number of control axes	Items are set in peripheral devices																								Speed change
				Common							Arc			Parameter block											Others				
				Parameter block No.	Axis	Address/travel value	Command speed	Dwell time	M-code	Torque limit value	Auxiliary point	Radius	Central point	Control unit	Speed limit value	Acceleration time	Deceleration time	Rapid stop deceleration time	Torque limit value	Deceleration processing on stop input	Allowable error range for circular interpolation	S-curve ratio	Commanded speed (Constant)	Cancel	Skip	FIN acceleration/deceleration	WAIT-ON/OFF	
Start	CPSTART1	—	1	△	○		○								△	△	△	△	△	△		△		△		△		Valid
End	CPEND	—	—					△																				
Pass point	ABS-1	Absolute data	1		○	○			△	△													△		△		△	
	INC-1	Incremental	1		○	○			△	△													△		△		△	

○: Must be set
△: Set if required

[Control details]

Start and end for 1 axis constant-speed control

1 axis constant-speed control is started and ended by the following instructions:

(1) CPSTART1

Starts the 1 axis constant-speed control. Sets the axis No. and command speed.

(2) CPEND

Ends the 1 axis constant-speed control for CPSTART1.

Positioning control method to the pass point

The positioning control to change control is specified by the following instructions:

(1) ABS-1/INC-1

Sets the 1 axis linear positioning control.

Refer to Section 6.2 "1 Axis Linear Positioning Control" for details.

[Program]

Program for repetition 1 axis constant-speed control is shown as the following conditions.

(1) System configuration

Axis 4 constant-speed control.

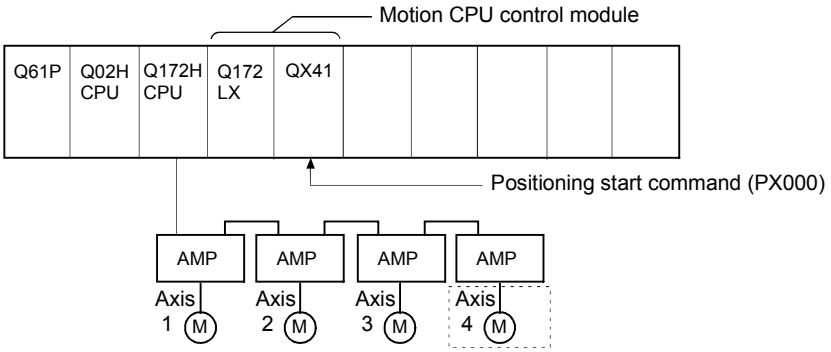

(2) Positioning conditions

(a) Constant-speed control conditions are shown below.

Item		Setting
Servo program No.		500
Control axis		Axis 4
Positioning speed		10000
Number of repetitions		100
Pass point travel value	P1	-1000
	P2	2000
	P3	-2000
	P4	1000

(b) Constant-speed control start command ..... Turning PX000 off to on (OFF → ON)

(3) Details of positioning operation

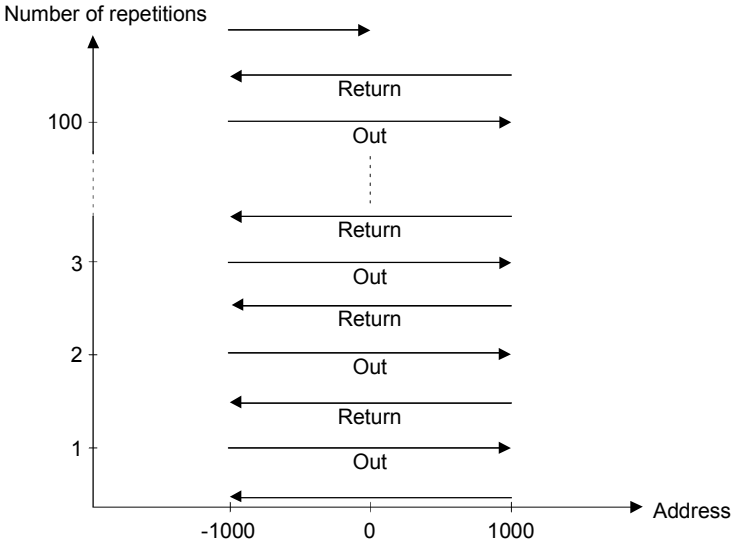

(4) Operation timing

Operation timing for servo program No.500 is shown below.

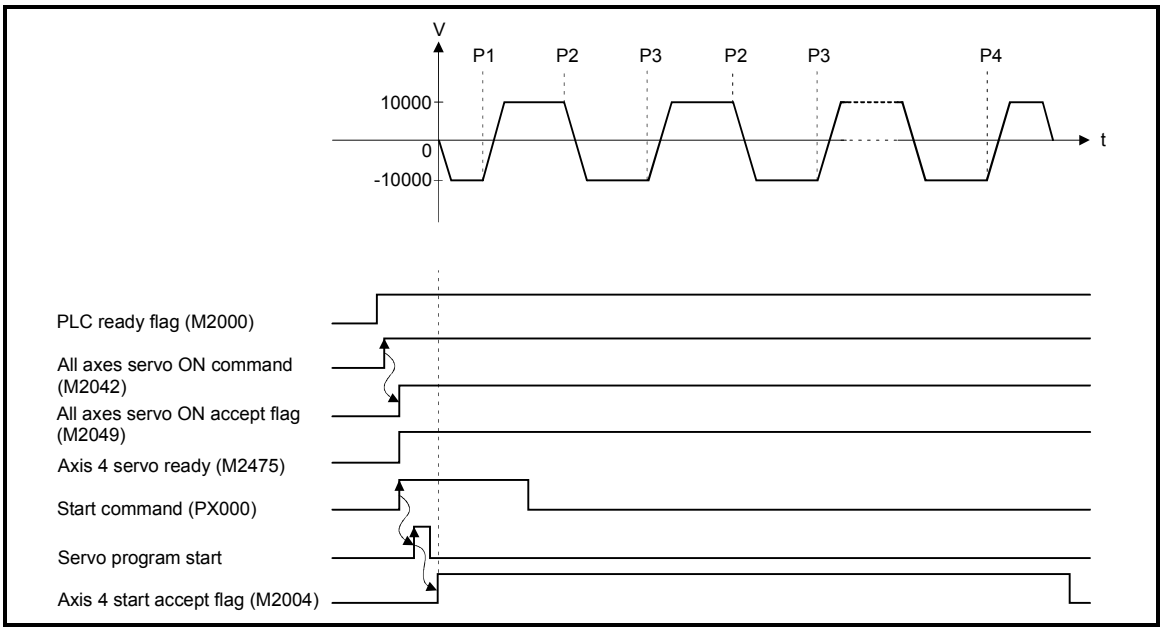

(5) Servo program

Servo program No.500 for constant-speed control is shown below.

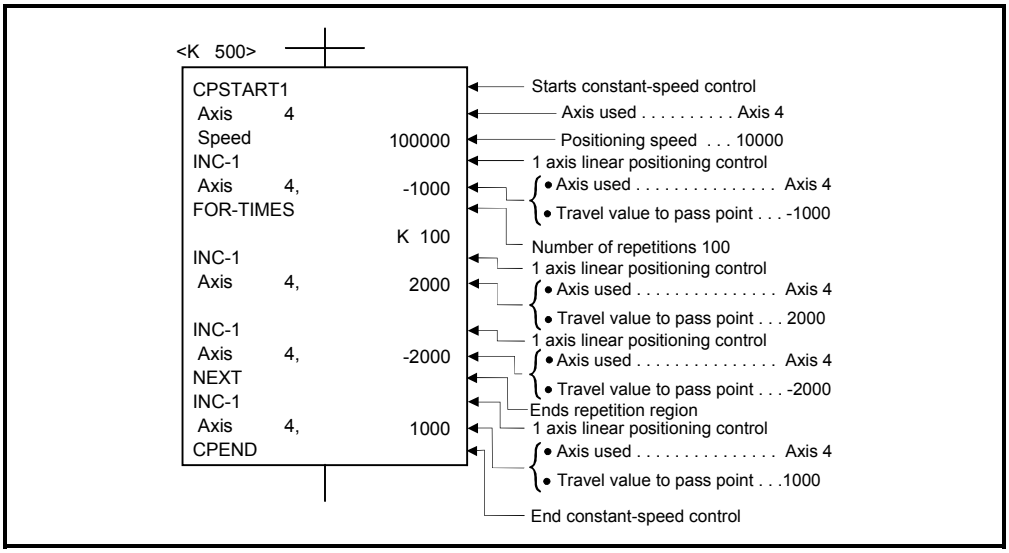

(Note): Example of the Motion SFC program for positioning control is shown next page.

(6) Motion SFC program

Motion SFC program for which executes the servo program is shown below.

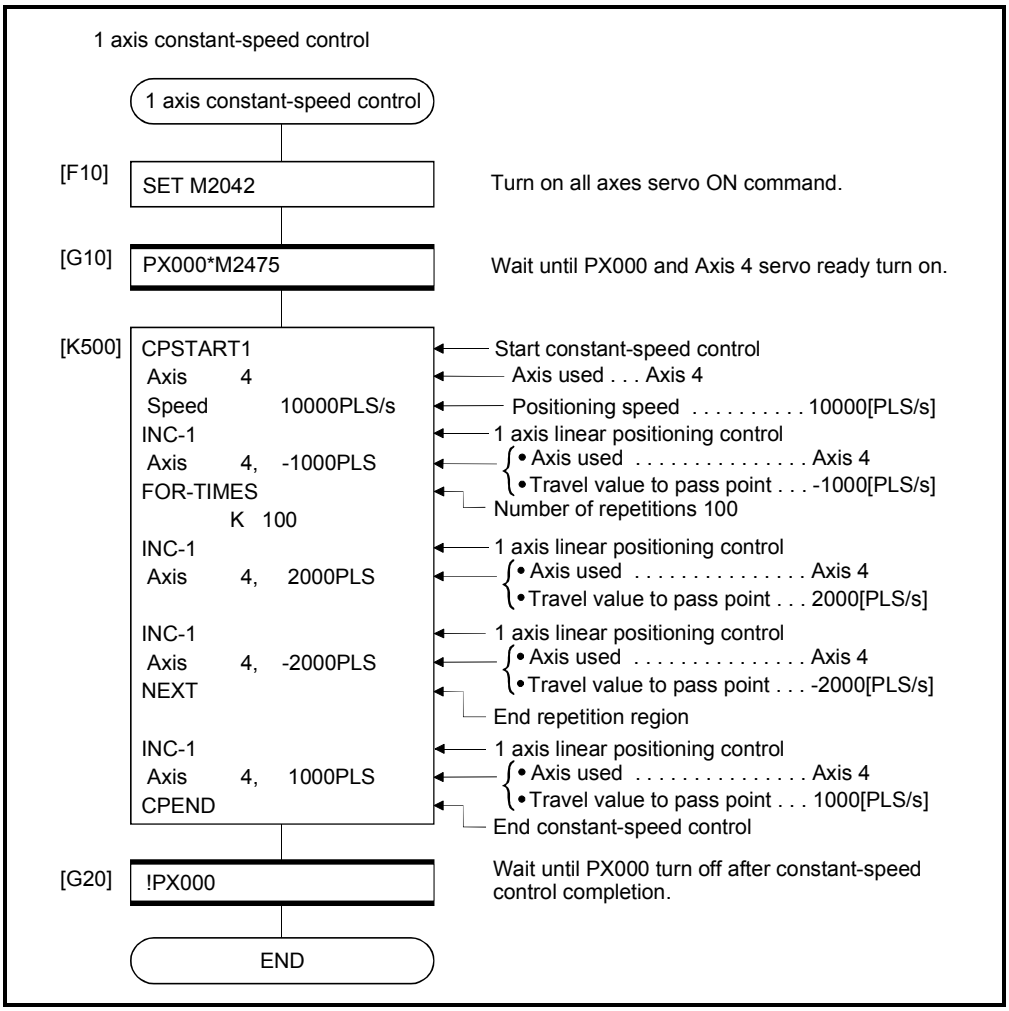

(Note): Example of the above Motion SFC program is started using the automatic start or PLC program.

6.17.4 2 to 4 axes constant-speed control

Constant-speed control for 2 to 4 axes.

Servo instruction		Positioning method	Number of control axes	Items are set in peripheral devices: Common: Parameter block No.	Axis	Address/travel value	Command speed	Dwell time	M-code	Torque limit value	Arc: Auxiliary point	Radius	Central point	Parameter block: Control unit	Speed limit value	Acceleration time	Deceleration time	Rapid stop deceleration time	Torque limit value	Deceleration processing on stop input	Allowable error range for circular interpolation	S-curve ratio	Others: Commanded speed (Constant)	Cancel	Skip	FIN acceleration/deceleration	WAIT-ON/OFF	Speed change
Start	CPSTART2	—	2	△	○		○							△	△	△	△	△	△	△	△	△		△		△		Valid
	CPSTART3		3	△	○		○							△	△	△	△	△	△	△	△	△		△		△		
	CPSTART4		4	△	○		○							△	△	△	△	△	△	△	△	△		△		△		
End	CPEND		—					△																				
Pass point	ABS-2	Absolute data	2		○	○			△	△													△		△		△	
	ABS-3		3		○	○			△	△													△		△		△	
	ABS-4		4		○	○			△	△													△		△		△	
	ABS		2		○	○			△	△	○												△		△		△	
	ABS				○	○			△	△		○											△		△		△	
	ABS												○															
	INC-2	Incremental data	2		○	○			△	△													△		△		△	
	INC-3		3		○	○			△	△													△		△		△	
	INC-4		4		○	○			△	△													△		△		△	
	INC		2		○	○			△	△	○												△		△		△	
	INC				○	○			△	△		○											△		△		△	
	INC												○															

○: Must be set
△: Set if required

[Control details]

Start and end for 2 to 4 axes constant-speed control

2 to 4 axes constant-speed control is started and ended using the following instructions:

(1) CPSTART2
Starts the 2 axes constant-speed control.
Sets the axis No. and command speed.

(2) CPSTART3
Starts the 3 axes constant-speed control.
Sets the axis No. and command speed.

(3) CPSTART4
Starts the 4 axes constant-speed control.
Sets the axis No. and command speed.

(4) CPEND
Ends the 2, 3, or 4 axes constant-speed control for CPSTART2, CPSTART3, or CPSTART4.

Positioning control method to the pass point

Positioning control to change control is specified using the following instructions:

(1) ABS-2/INC-2
Sets 2 axes linear interpolation control.
Refer to Section 6.3 "2 Axes Linear Interpolation Control" for details.

(2) ABS-3/INC-3
Sets 3 axes linear interpolation control.
Refer to Section 6.4 "3 Axes Linear Interpolation Control" for details.

(3) ABS-4/INC-4
Sets 4 axes linear interpolation control.
Refer to Section 6.5 "4 Axes Linear Interpolation Control" for details.

(4) ABS/INC
Sets circular interpolation control using auxiliary point specification.
Refer to Section 6.6 "Auxiliary Point-Specified Circular Interpolation Control" for details.

(5) ABS/INC , ABS/INC , ABS/INC , ABS/INC
Sets circular interpolation control using radius specification.
Refer to Section 6.7 "Radius-Specified Circular Interpolation Control" for details.

(6) ABS/INC ↷, ABS/INC ↶

Sets circular interpolation control using center point specification.
Refer to Section 6.8 "Central Point-Specified Circular Interpolation Control" for details.

[Program]

(1) Program for 2 axes constant-speed control is shown as the following conditions.

(a) System configuration

Constant-speed control for Axis 2 and Axis 3.

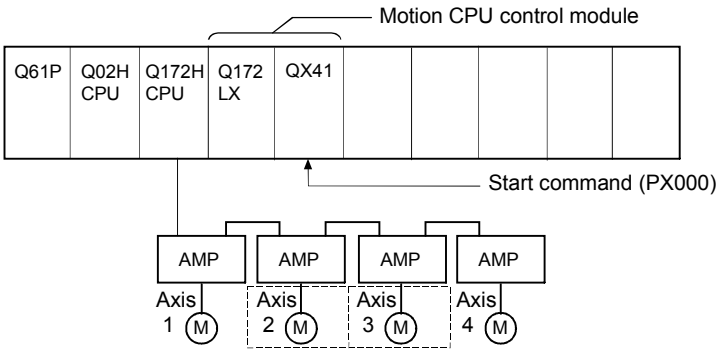

(b) Positioning operation details

Axis 2 and axis 3 servomotors is used for positioning operation.
Positioning details for Axis 2 and Axis 3 servomotors are shown below.

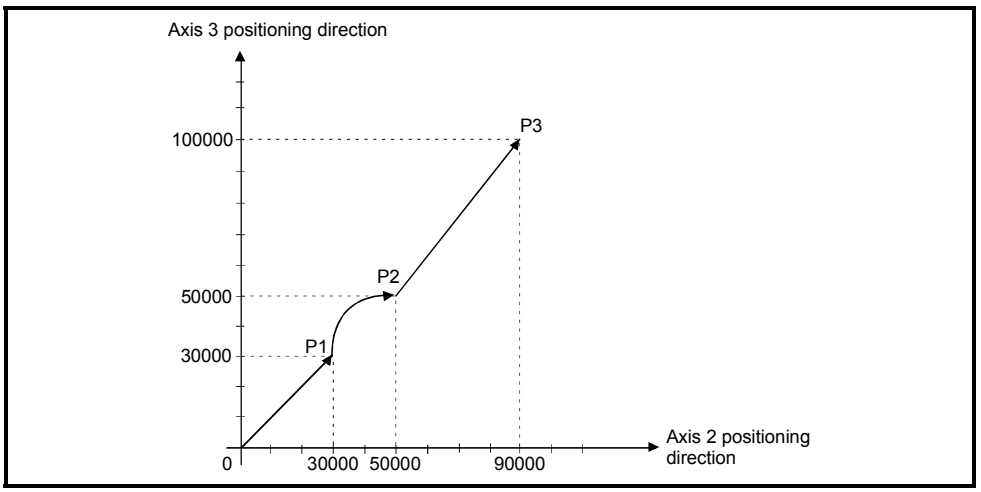

Fig.6.30 Positioning for Axis 2 and Axis 3

(c) Positioning conditions

1) Constant-speed control conditions are shown below.

Item		Setting		
Servo program No.		505		
Positioning speed		10000		
Positioning method		2 axes linear interpolation	Radius-specified circular interpolation	2 axes linear interpolation
Pass point	Axis 2	30000	50000	90000
	Axis 3	30000	50000	100000

2) Constant-speed control start command ... Turning PX000 off to on (OFF → ON)

(d) Servo program

Servo program No.505 for constant-speed control is shown below.

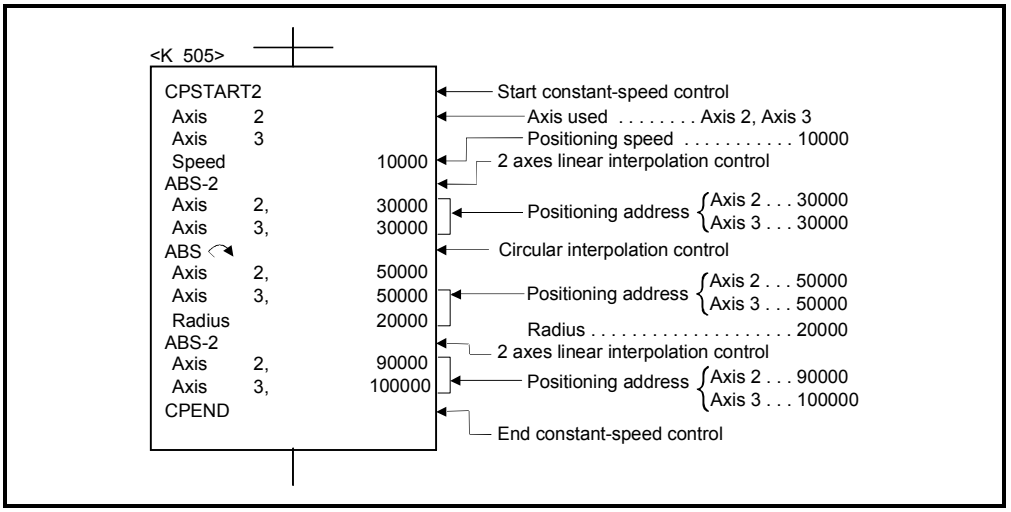

(e) Motion SFC program

Motion SFC program for which executes the servo program is shown below.

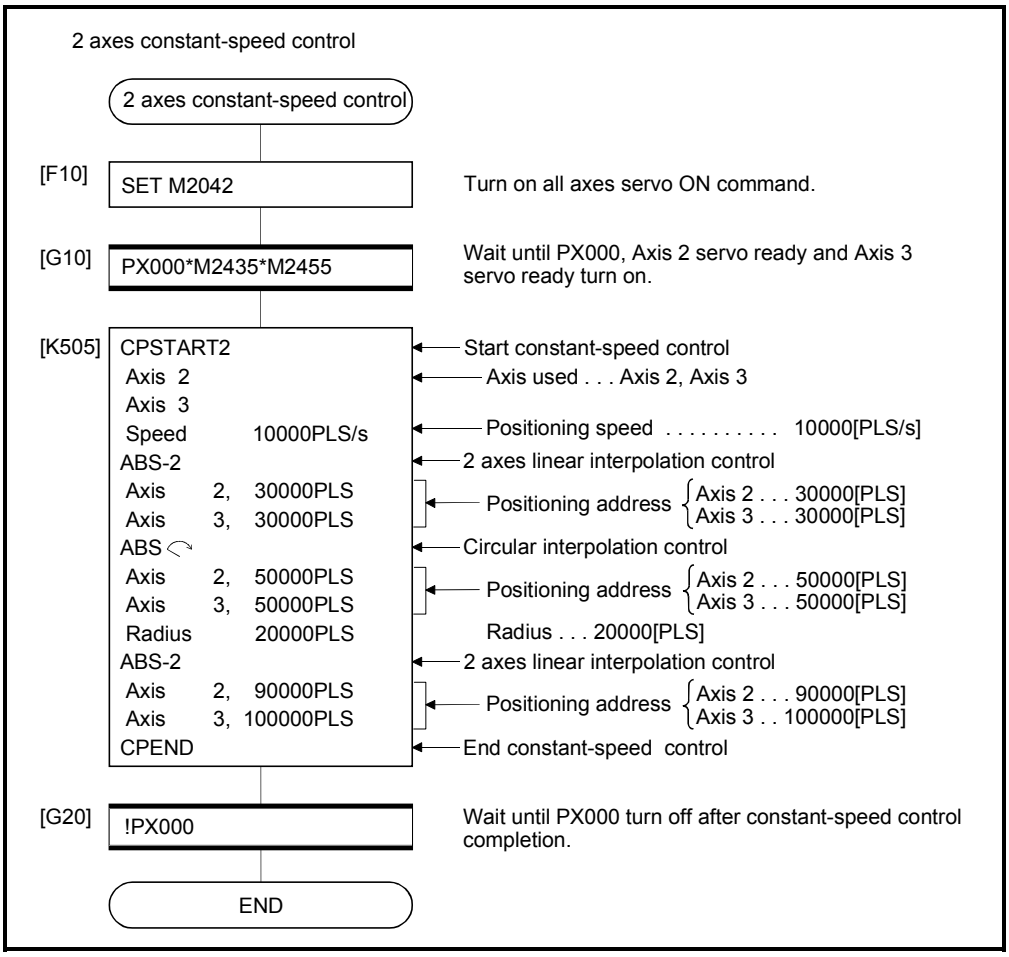

(Note): Example of the above Motion SFC program is started using the automatic start or PLC program.

(2) Program for 4 axes constant-speed control is shown as the following conditions.

(a) System configuration

Constant-speed control for Axis 1, Axis 2, Axis 3, and Axis 4.

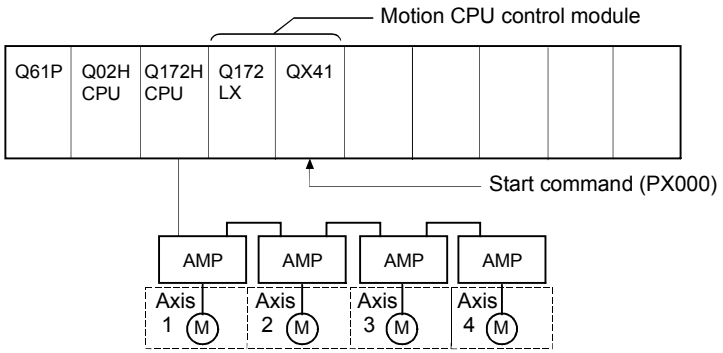

(b) Positioning conditions

1) Constant-speed control conditions are shown below.

Item		Setting		
Servo program No.		506		
Positioning speed		10000		
Positioning method		4 axes linear interpolation	4 axes linear interpolation	4 axes linear interpolation
Pass point	Axis 1	3000	5000	5000
	Axis 2	4000	3500	3500
	Axis 3	4000	-4000	3000
	Axis 4	4000	-6000	6000

2) Constant-speed control start command... Turning PX000 off to on (OFF → ON)

(c) Servo program

Servo program No.506 for constant-speed control is shown below.

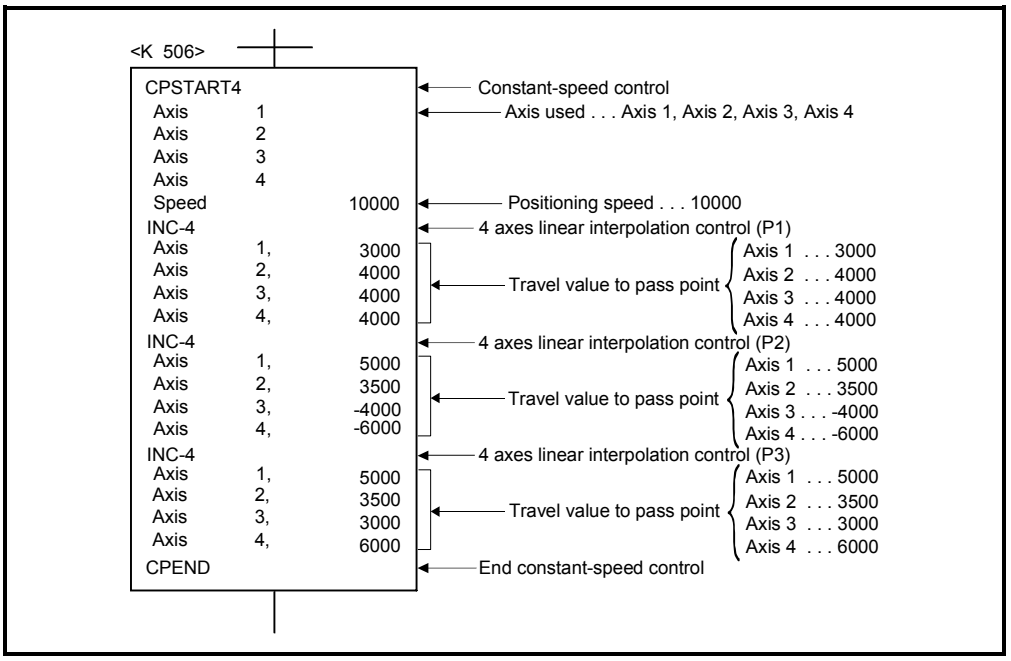

(Note): Example of the Motion SFC program for positioning control is shown next page.

(d) Motion SFC program

Motion SFC program for which executes the servo program is shown below.

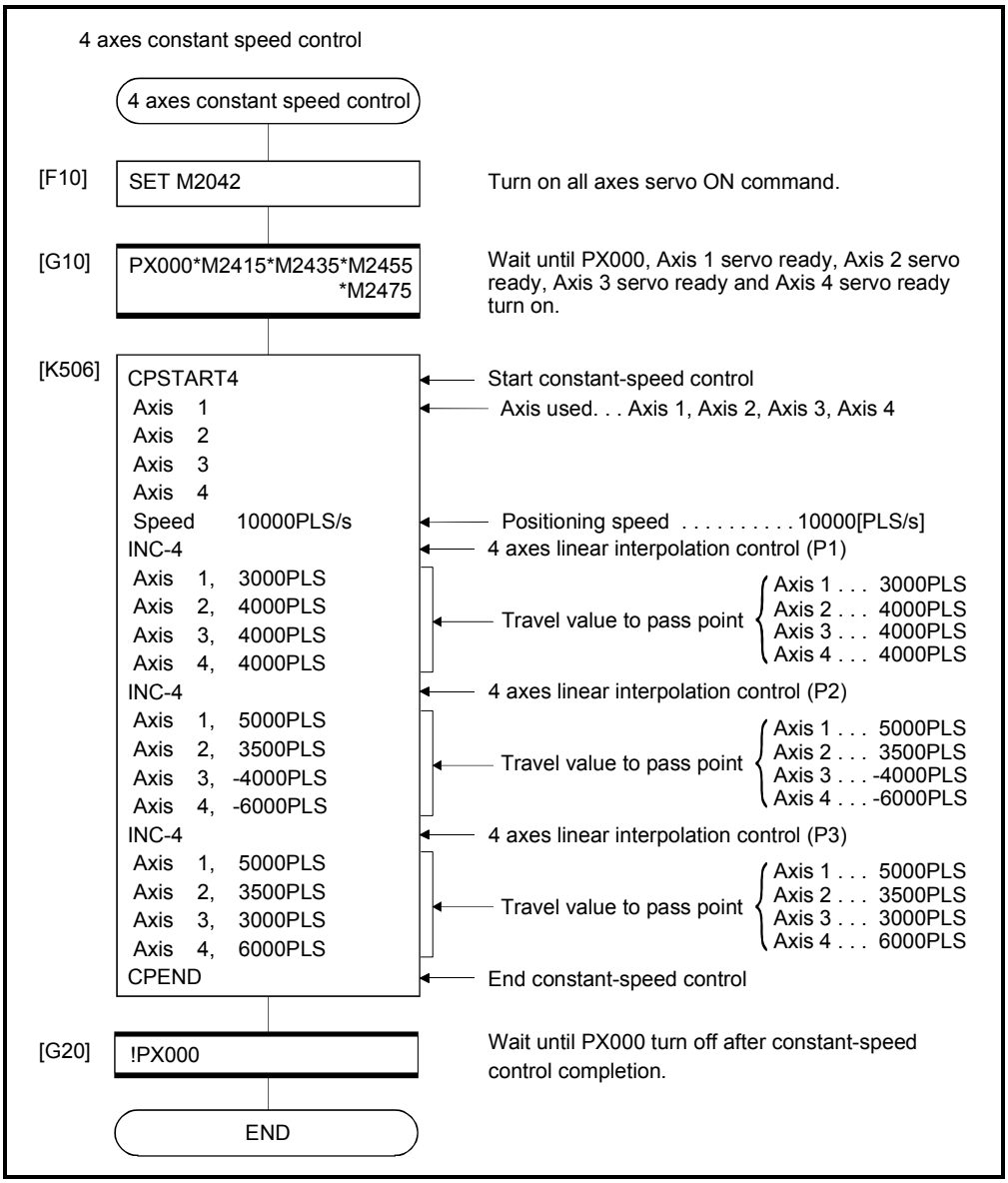

(Note): Example of the above Motion SFC program is started using the automatic start or PLC program.

6.17.5 Constant speed control for helical interpolation

The helical interpolation can be specified as the positioning control method to pass point for 3 or 4 axes constant-speed control.
Starting or ending instruction for constant-speed control uses the same CPSTART3, CPSTART4 or CPEND as 3 or 4 axes constant-speed control instruction.

Servo instruction	Positioning method	Number of control axes	Items are set in peripheral devices																									Speed change
			Common						Arc				Parameter block										Others					
			Parameter block No.	Axis	Address/travel value	Command speed	M-code	Torque limit value	Auxiliary point	Radius	Central point	Pitch	Control unit	Speed limit value	Acceleration time	Deceleration time	Rapid stop deceleration time	Torque limit value	Deceleration processing on stop input	Allowable error range for circular interpolation	S-curve ratio	Commanded speed (Constant)	Cancel	Skip	FIN acceleration/deceleration	WAIT-ON/OFF	
ABH	Constant-speed pass point absolute specification	2		○	○		△	△	○			○										△		△		△	Valid
ABH				○	○		△	△		○		○										△		△		△	
ABH				○	○		△	△			○	○										△		△		△	
INH	Constant speed pass point incremental specification	2		○	○		△	△	○			○										△		△		△	
INH				○	○		△	△		○		○										△		△		△	
INH				○	○		△	△			○	○										△		△		△	

○: Must be set
△: Set if required

Helical interpolation specified methods for constant-speed control are shown below.

Servo instruction	Positioning method	Circular interpolation specified method
ABH	Absolute	Radius-specified method less than CW180°
INH	Incremental	
ABH	Absolute	Radius-specified method less than CCW180°
INH	Incremental	
ABH	Absolute	Radius-specified method CW180° or more.
INH	Incremental	
ABH	Absolute	Radius-specified method CCW180° or more.
INH	Incremental	
ABH	Absolute	Central point-specified method CW
INH	Incremental	
ABH	Absolute	Central point-specified method CCW
INH	Incremental	
ABH	Absolute	Auxiliary point-specified method
INH	Incremental	

[Program]

(1) Servo program

Servo program for which helical interpolation specified pass point for constant-speed control is shown below.

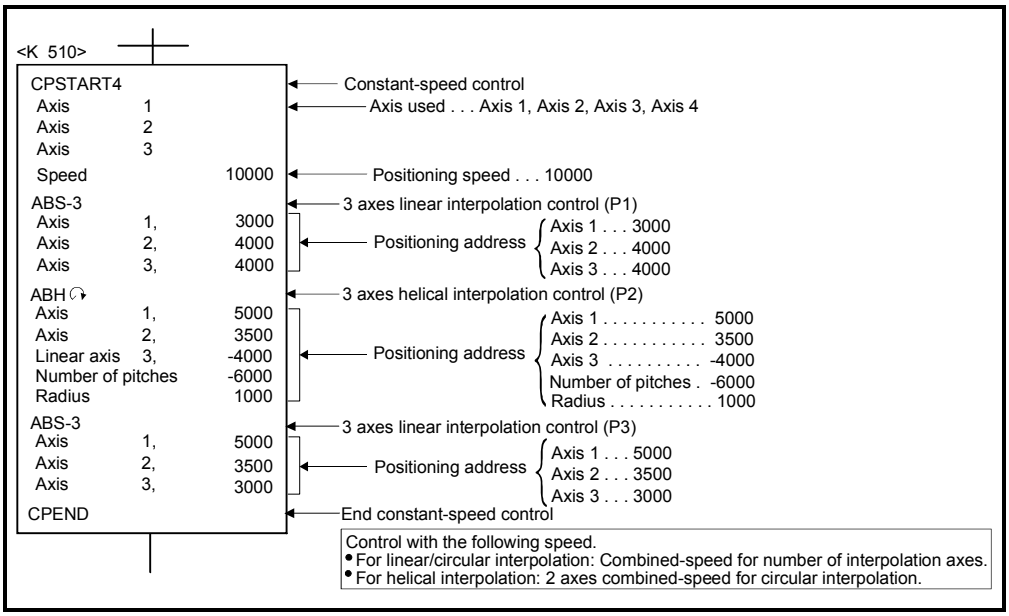

[Cautions]

(1) The helical interpolation specification at pass point for constant-speed control can be used in the both of real and virtual mode.

(2) Specify any 3 axes among 4 controlled axes in the helical interpolation control at the pass point for 4 axes constant-speed control (CPSTART4).

(3) Command speed at the helical interpolation specified point is controlled with the speed of circumference.
Control is the same as before at the point except for the helical interpolation specification.
(Both of the linear interpolation-specified point and circular interpolation-specified point are the combined-speed for number of interpolation axes.)

(4) Skip function toward the helical interpolation-specified each point for constant-speed control is possible. If the absolute-specified helical interpolation is specified to point since the skip signal specified point, set the absolute linear interpolation between them. If it does not set, it may occur an error and stop.

(5) FIN signal wait function toward the helical interpolation specified each pass point for constant-speed control is possible. M-code outputting signal is outputted to all circular interpolation axes and linear axes. Fin signal can be operated with the both of circular interpolation axes and linear axes.

(6) If negative speed change toward the helical interpolation-specified each pass point for constant-speed control is executed, it can be returned before 1 point during positioning control.

(7) Speed-switching point-specified flag is effective toward the helical interpolation-specified each pass point for constant-speed control.

,

6.17.6 Pass point skip function

This function stops positioning to executing point and executes positioning to next point, by setting a skip signal toward each pass point for constant-speed control.

[Data setting]

(1) Skip signal devices

The following devices can be specified as skip signal devices.
X, Y, M, B, F

[Cautions]

(1) When an absolute circular interpolation or absolute helical interpolation is specified to since point since the skip signal specified point, set the absolute linear interpolation between them.
If it does not set, it may occur an error and stop.

(2) If a skip signal is inputted at the end point, a deceleration stop occurs at that point and the program is ended.

[Program]

```
<K  0>
CPSTART2
 Axis      1
 Axis      2
 Speed              10000
ABS-2
 Axis      1,      100000
 Axis      2,      200000
 Speed              10000
 Skip                M200
ABS-2
 Axis      1,      200000
 Axis      2,      200000
 Speed              15000
CPEND
```

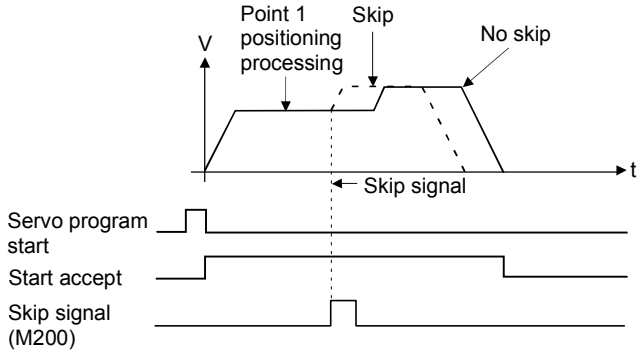

⚠ CAUTION

● When a skip is specified during constant-speed control and the axis which has no stroke range [degree] is included, the operation at the execution of skip is described.

(Note-1): If there is an ABS instruction after the skip in these conditions, the end positioning point and the travel distance in the program as a whole will be the same regardless of whether the skip is executed or not.

(1) All instructions after the skip are INC instructions:

Program example

```
CPSTART1
 Axis        1
 Speed                  10.000
INC-1
 Axis        1,      180.00000
 Skip                   M100
INC-1
 Axis        1,      180.00000
INC-1
 Axis        1,      270.00000
CPEND
```

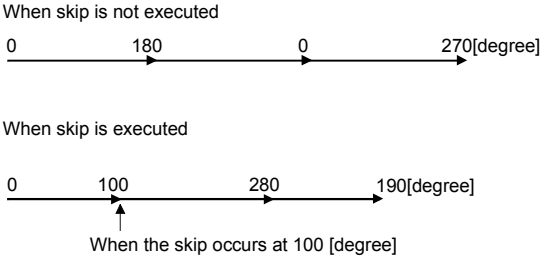

(2) Instruction immediately after the skip is ABS instruction:

Program example

```
CPSTART1
 Axis        1
 Speed                  10.000
INC-1
 Axis        1,      180.00000
 Skip                   M100
ABS-1
 Axis        1,      350.00000
INC-1
 Axis        1,      270.00000
CPEND
```

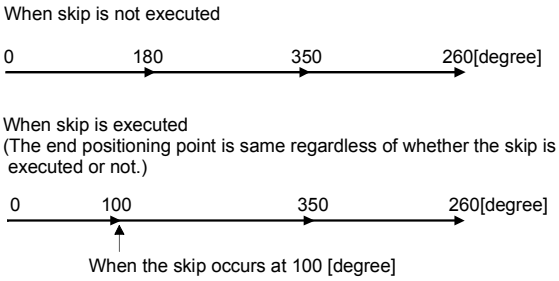

(3) Instruction immediately after the skip is INC instruction and there is ABS instruction after that:

Program example

```
CPSTART1
 Axis        1
 Speed                  10.000
INC-1
 Axis        1,      360.00000
 Skip                   M100
INC-1
 Axis        1,      180.00000
INC-1
 Axis        1,      180.00000
ABS-1
 Axis        1,       90.00000
CPEND
```

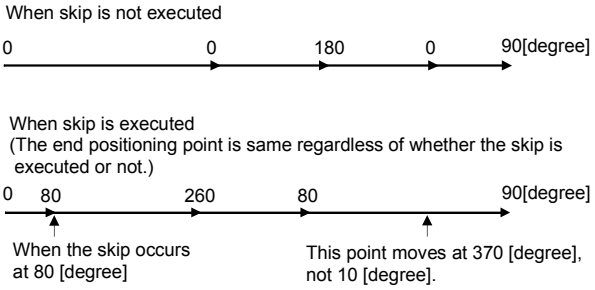

6.17.7 FIN signal wait function

By selecting the FIN signal wait function and setting a M-code at each executing point, a process end of each executing point is synchronized with the FIN signal, the FIN signal turns ON to OFF and then the next positioning is executed.
Turn the FIN signal on/off using the Motion SFC program or PLC program.

[Data setting]

(1) When the FIN signal wait function is selected, the fixed acceleration/deceleration time method is used. Set the acceleration/deceleration time within the range of 1 to 5000 [ms] by "FIN acceleration/deceleration" (selecting item) in the servo program.
Indirect setting is also possible by D, W and # devices (1 word).

[Cautions]

(1) If the acceleration/deceleration time is specified outside the setting range, the servo program setting error [13] will occur at the start and it is controlled with the acceleration/deceleration time of 1000[ms].

(2) M-code outputting signal is output to all interpolation axes at the interpolation control. In this case, turn on the signal for one of the interpolation axes.

(3) When M-code is set at the end point, positioning ends after the FIN signal has turn OFF to ON to OFF.

[Operation]

Servo program K0 for FIN signal wait function is shown below.

```
<K  0>
CPSTART2
 Axis        1
 Axis        2
 Speed                  10000
 FIN acceleration/        100   [ms]
 deceleration
ABS-2
 Axis        1,        200000
 Axis        2,        200000
 M code                    10
ABS-2
 Axis        1,        300000
 Axis        2,        250000
 M code                    11
ABS-2
 Axis        1,        350000
 Axis        2,        300000
 M code                    12
ABS-2
 Axis        1,        400000
 Axis        2,        400000
CPEND
```

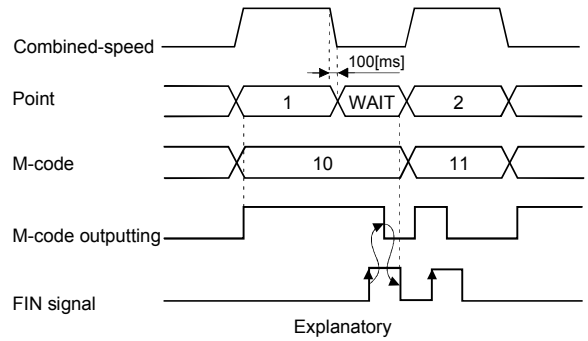

1. When the positioning of point 1 starts, M-code 10 is output and M-code outputting signal turns on.
2. FIN signal turns on after performing required processing in the Motion SFC program.
   Transition to the next point does not execute until the FIN signal turns on.
3. When the FIN signal turns on, M-code outputting signal turns off.
4. When the FIN signal turns off after the M-code outputting signal turns off, the positioning to the next point 2 starts.

[Program example]

(1) FIN signal wait function by the PLC program

(a) System configuration

FIN signal wait function toward constant-speed control for Axis 1 and Axis 2.

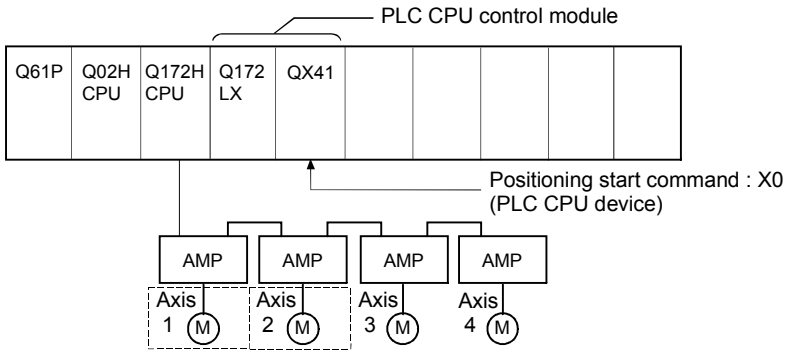

(b) Positioning conditions

1) Constant-speed control conditions are shown below.

Item		Setting			
Servo program No.		0			
Positioning speed		10000			
FIN acceleration/deceleration time		100[ms]			
Positioning method		2 axes linear interpolation control			
Pass point	Axis 1	200000	300000	350000	400000
	Axis 2	200000	250000	300000	400000
M-code		10	11	12	—

2) Constant-speed control start command

.....Turning X0 off to on (OFF → ON)
(PLC CPU device)

(c) Servo program

Servo program No.0 for constant-speed control is shown below.

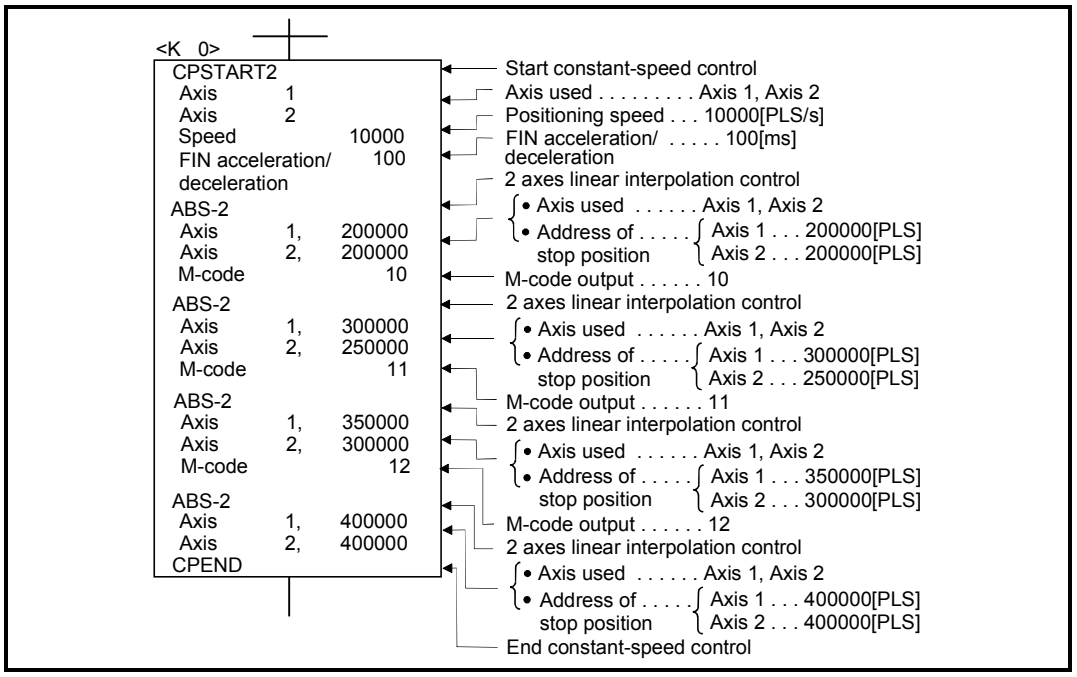

(d) Motion SFC program

Motion SFC program for constant-speed control is shown below.

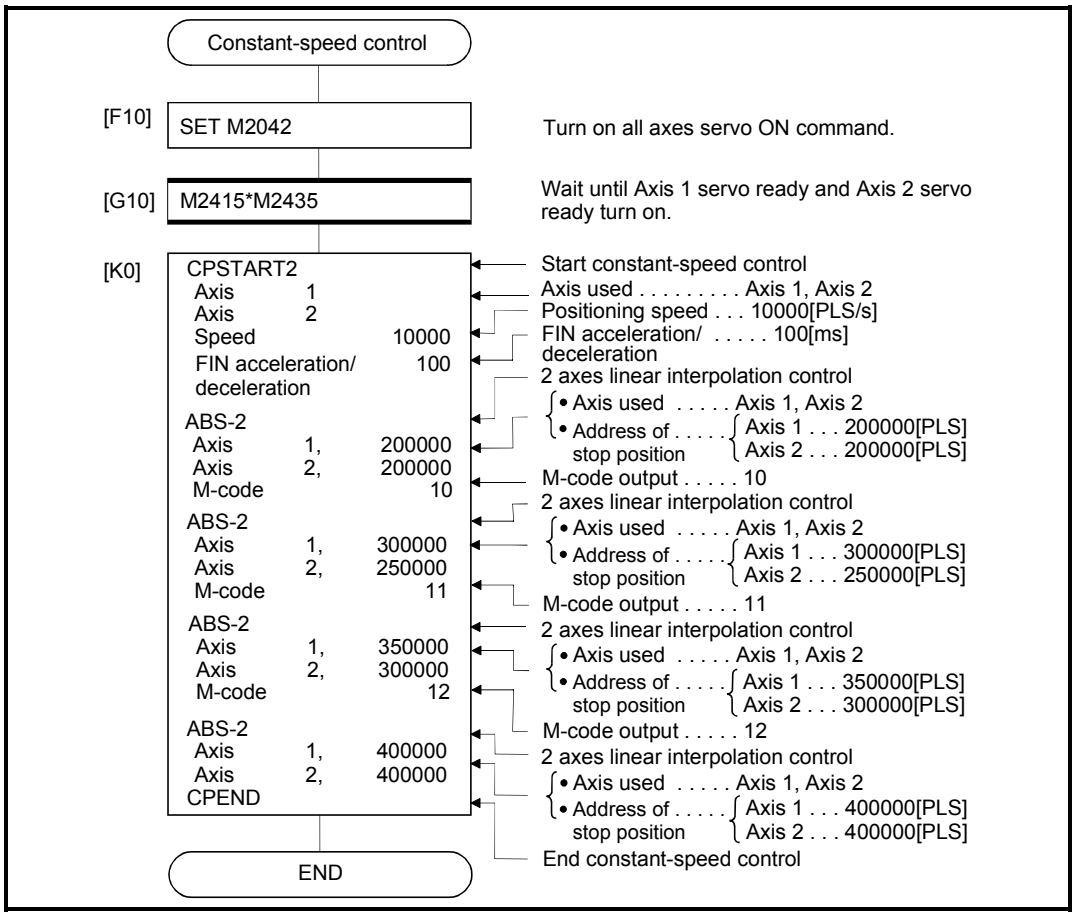

(Note): Example of the above Motion SFC program is started using the automatic start or PLC program.

(e) PLC program

PLC program for FIN signal wait function is shown below.

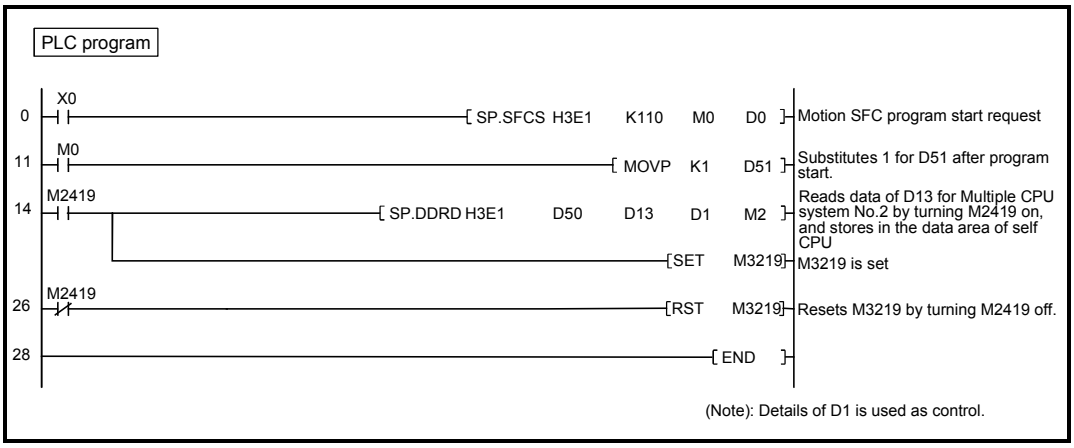

(f) Parameter setting

The CPU shared memory setting example for FIN signal wait function is shown below.

CPU No. 1 (PLC CPU) (GX Developer)

Multiple CPU Setting (setting 1: M2400 to M2495)

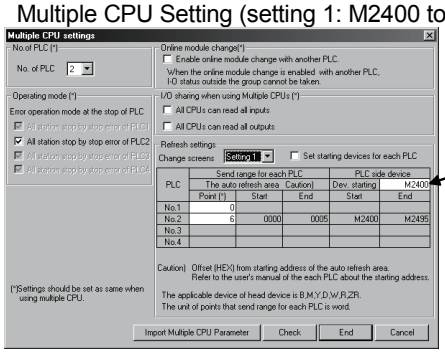

Multiple CPU Setting (setting 2: M3200 to M3295)

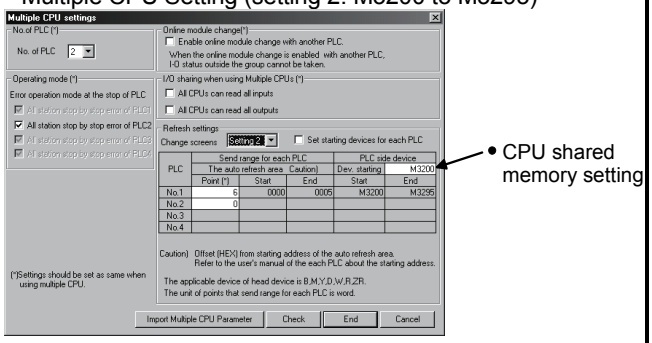

CPU No. 2 (Motion CPU) (SW6RN-GSV□P)

Multiple CPU Setting (setting 1: M2400 to M2495)

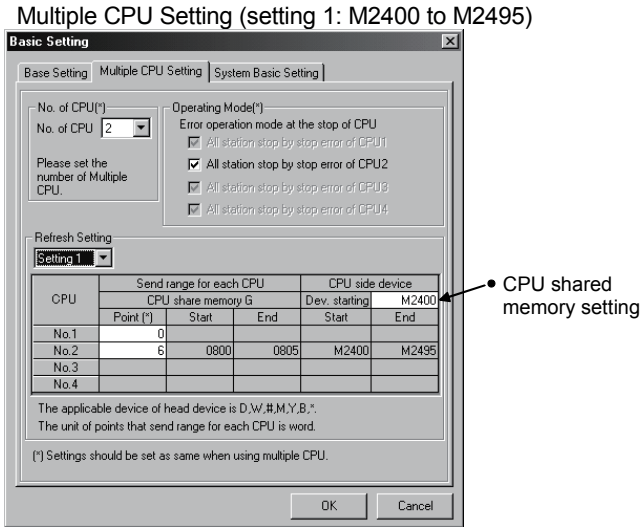

Multiple CPU Setting (setting 2: M3200 to M3295)

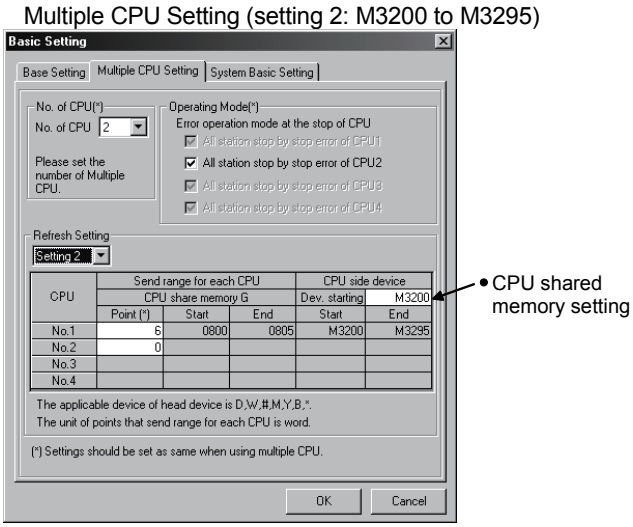

(2) FIN signal wait function using the Motion SFC program

(a) System configuration

FIN signal wait function toward constant-speed control for Axis 1 and Axis 2.

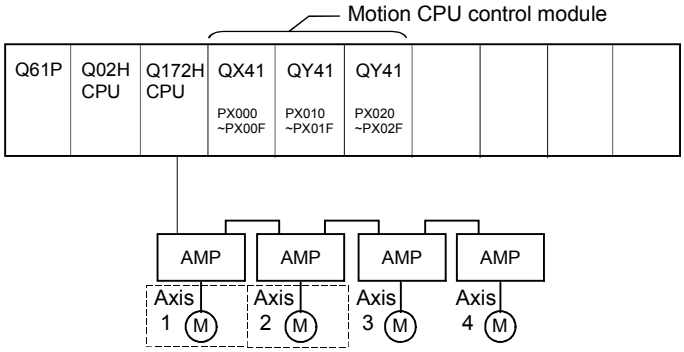

(b) Positioning conditions

1) Constant-speed control conditions are shown below.

Item		Setting			
Servo program No.		0			
Positioning speed		10000			
FIN acceleration/deceleration time		100[ms]			
Positioning method		2 axes linear interpolation control			
Pass point	Axis 1	200000	300000	350000	400000
	Axis 2	200000	250000	300000	400000
M-code		10	11	12	—

2) Constant-speed control start command ... Turning PX000 off to on (OFF → ON)

(c) Servo program

Servo program No.0 for constant speed control is shown below.

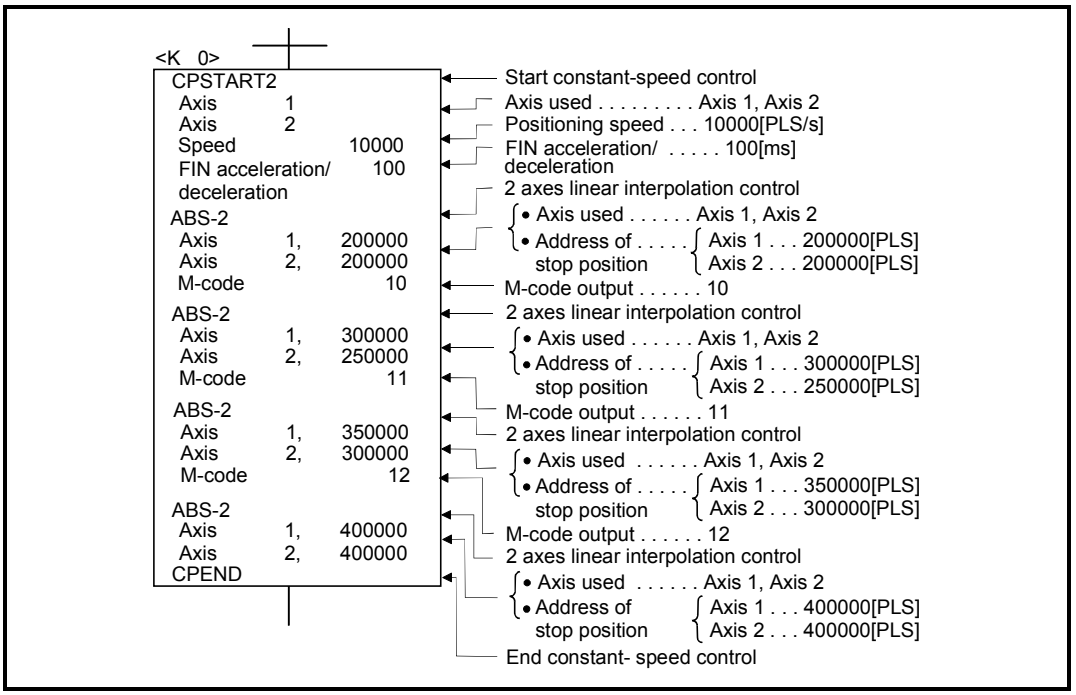

(Note): Example of the Motion SFC program for positioning control is shown next page.

(d) Motion SFC program

1) Motion SFC program for constant-speed control is shown below.

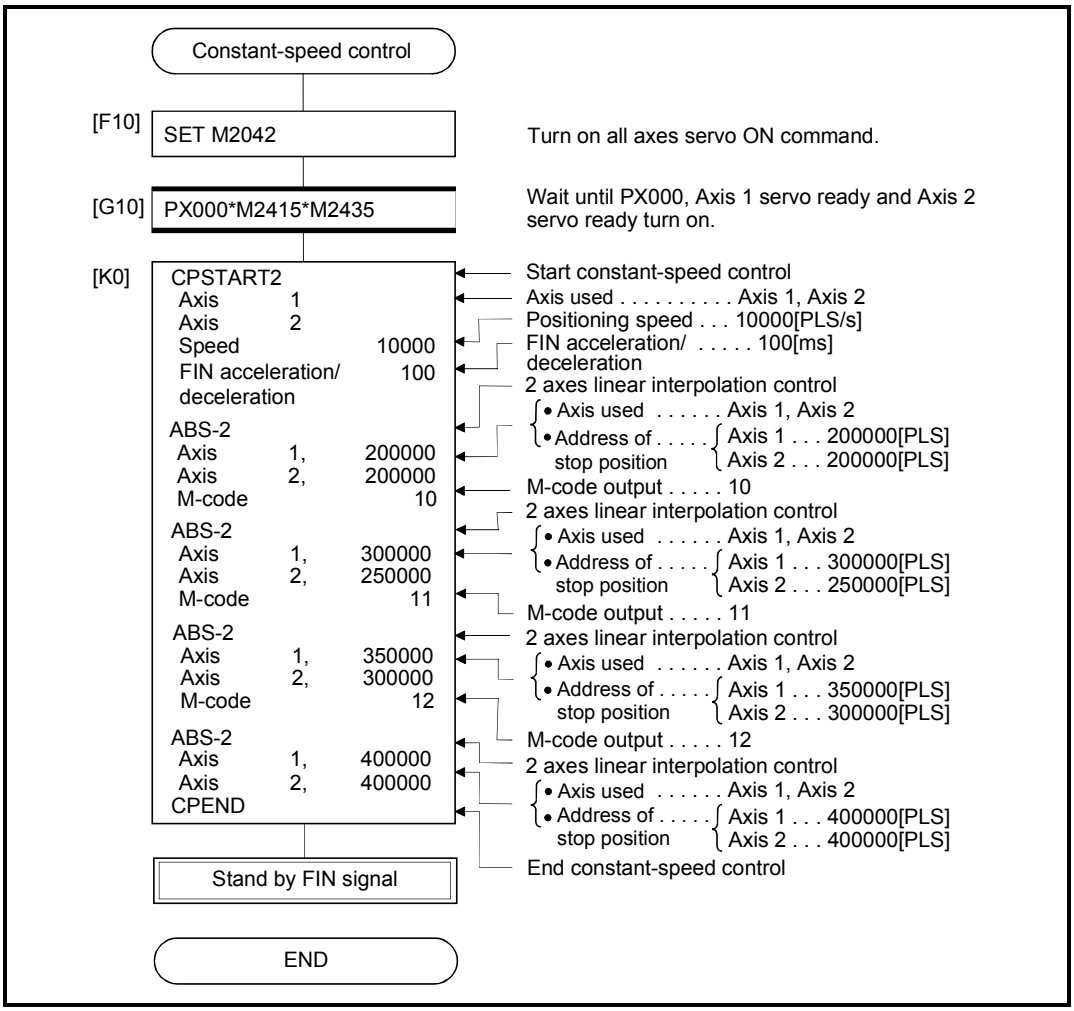

(Note): Example of the above Motion SFC program is started using the automatic start or PLC program.

2) Motion SFC program which outputs M-code of each point for constant-speed control to PY20 to PY2F by BCD code is shown below.

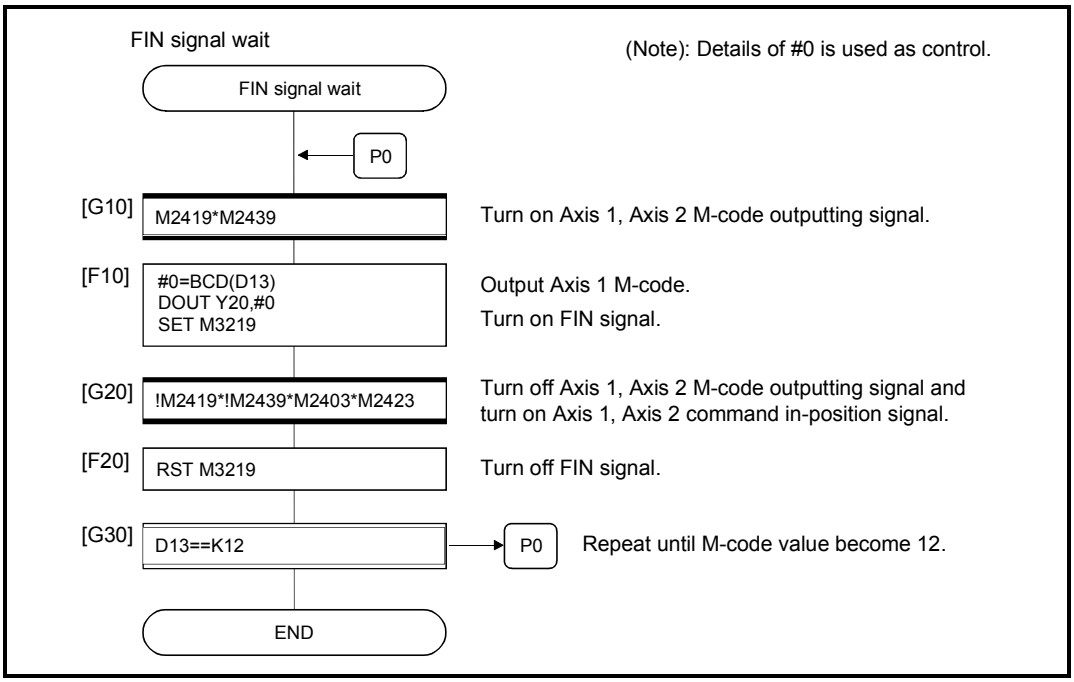

POINT

(1) The fixed acceleration/deceleration time method is acceleration/deceleration processing that the time which acceleration/deceleration takes is fixed, even if the command speed differs.

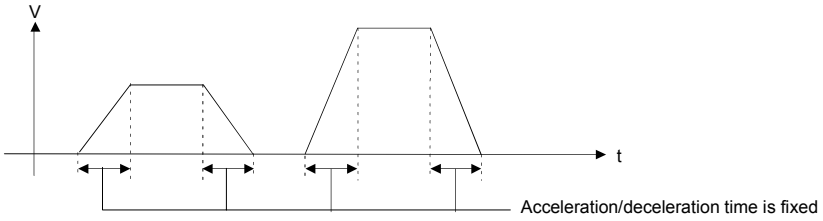

(a) The following processing and parameters are invalid in the fixed acceleration/deceleration time method.
- Rapid stop acceleration/deceleration time in parameter block
- Completion point specification method for speed change point
- S-curve acceleration/deceleration

(b) The speed processing for each axis is as shown below in positioning operation (constant-speed) as shown in the following figure.

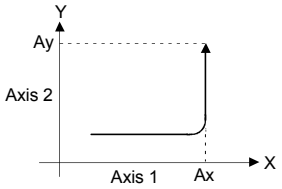

Positioning operation

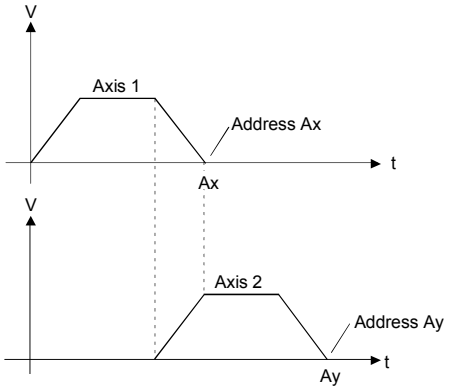

Constant-speed control processing of each axis

(2) When the rapid stop command is executed by the setting "deceleration time < rapid stop deceleration time" during constant-speed control, the point data currently executed in the middle of deceleration, and the positioning may be completed suddenly as a speed "0".
In the case of, "deceleration time ≧ rapid stop deceleration time", the above operation is not executed.

Travel value by the point data currently executed at the rapid stop command (Up to 9 points) < speed at rapid stop command input × rapid stop deceleration time/2

[Operation pattern]

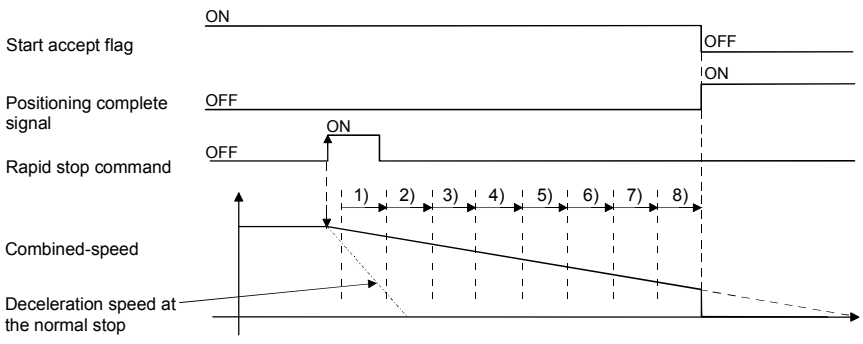

6.18 Position Follow-Up Control

Positioning to the address set in the word device of the Motion CPU specified with the servo program at one start is executed.
Position follow-up control is started using the PFSTART servo program instruction.

Servo instruction	Positioning method	Number of control axes	Items are set in peripheral devices																						Speed change
			Common							Arc			Parameter block										Others		
			Parameter block No.	Axis	Address/travel value	Command speed	Dwell time	M-code	Torque limit value	Auxiliary point	Radius	Central point	Control unit	Speed limit value	Acceleration time	Deceleration time	Rapid stop deceleration time	Torque limit value	Deceleration processing on stop input	Allowable error range for circular interpolation	S-curve ratio	Cancel	WAIT-ON/OFF		
PFSTART	Absolute	1	△	○	○	○		△						△	△	△	△	△	△		△	△		Valid

○: Must be set
△: Set if required

[Control details]

Control using PFSTART instruction

(1) Positioning to the address set in the word device of the Motion CPU specified with the servo program is executed.

(2) Position follow-up control is executed until the stop instruction is input.
If the word device value changes during operation, positioning is executed to the changed address.

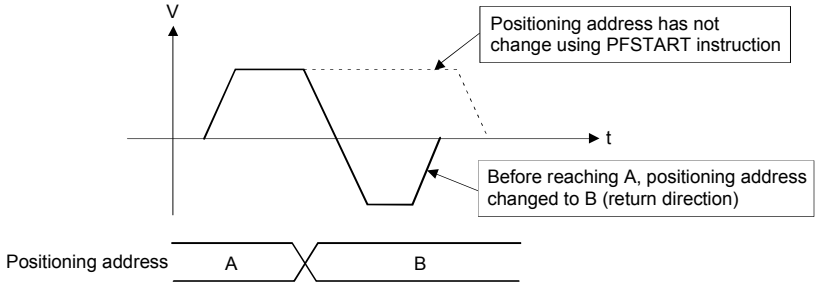

[Cautions]

(1) Number of control axes is 1 axis.

(2) Only the absolute data method (ABS□) is used for positioning control to the pass points.

(3) The speed can be changed during the start.
The changed speed is effective until the stop command is input.

(4) Set the positioning address in the servo program using indirect setting with the word devices D, W and #.

(5) Use only even-numbered devices for indirect setting of positioning address in the servo program.
If odd-numbered devices are used, an error [141] occurs at the start and control does not start.

(6) Positioning speeds can be set in the servo program using indirect setting with the word devices D, W and #.
However, this data is effective only at the position follow-up control start (servo program start) and the speed does not change if the indirect setting are changed during the start.

[Program]

(1) System configuration

Axis 3 position follow-up control for PLC CPU (CPU No.1) to Motion CPU (CPU No.2).

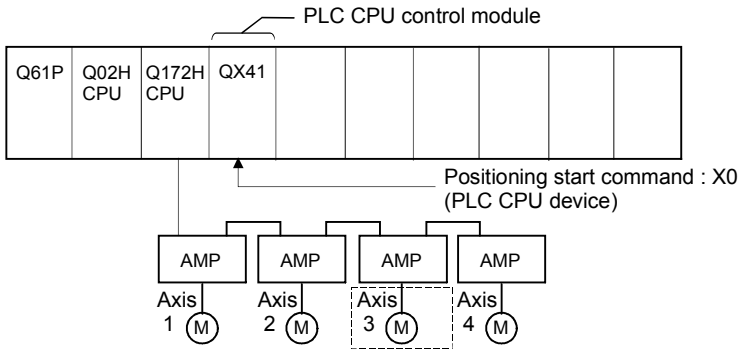

(2) Positioning conditions

(a) Position follow-up conditions are shown below.

Item	Setting
Servo program No.	100
Control axis	Axis 3
Positioning address	D4000
Positioning speed	20000

(b) Position follow-up control start command
.....Turning X0 off to on (OFF → ON)
(PLC CPU device)

(3) Operation timing

Operation timing for position follow-up control is shown below.

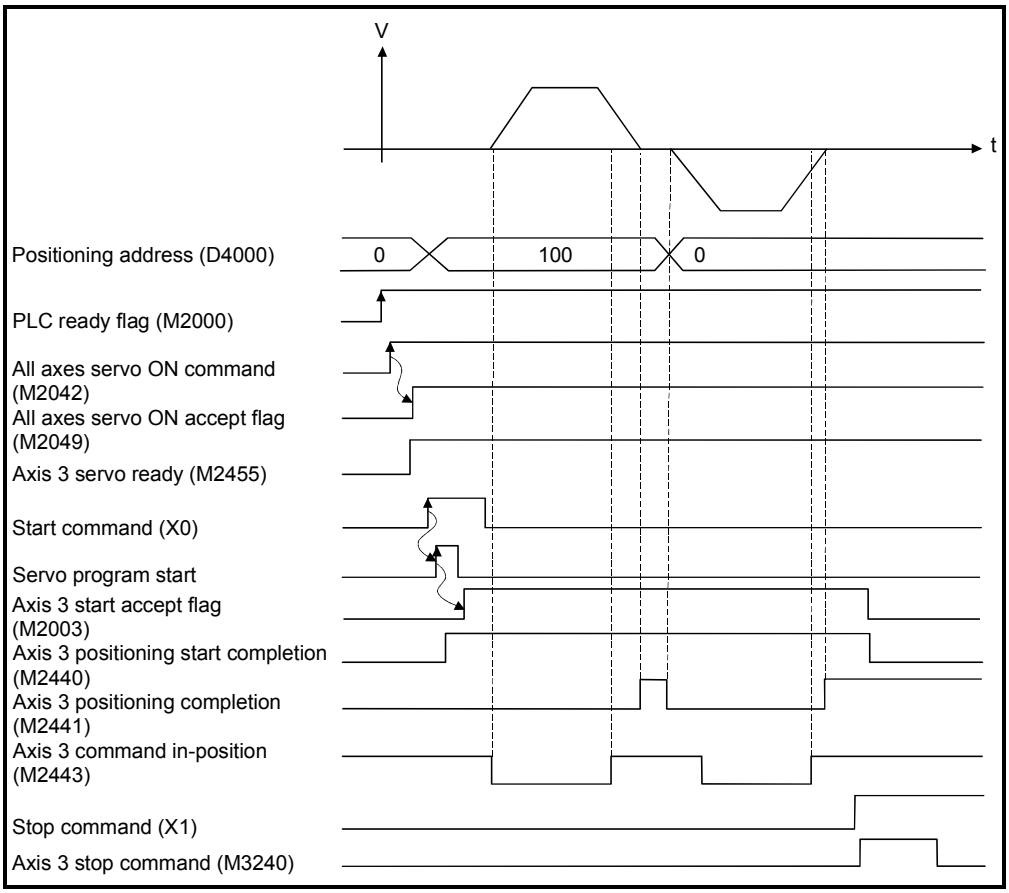

(4) Servo program

Servo program No.100 for position follow-up control is shown below.

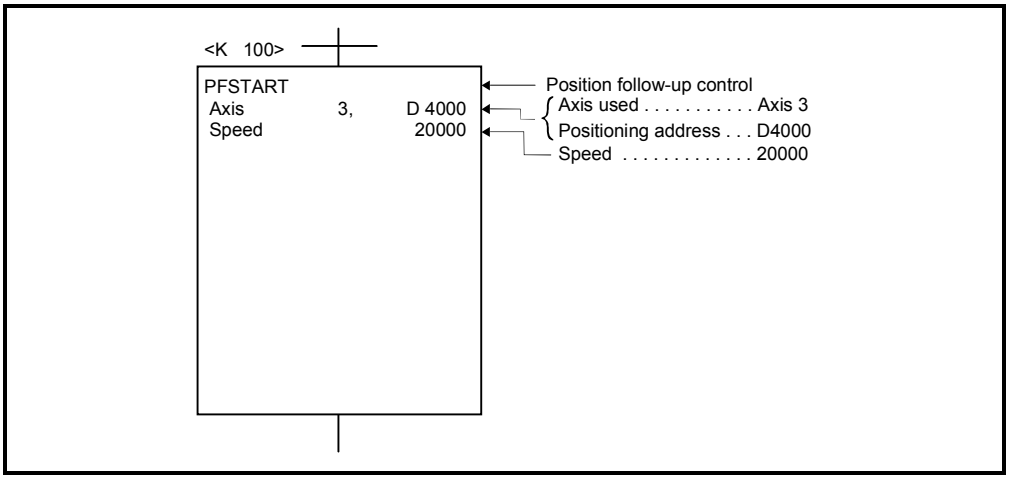

(Note): Example of the Motion SFC program for positioning control is shown next page.

(5) Motion SFC program

Motion SFC program, PLC program and parameter setting for position follow-up control is shown below.

(a) Motion SFC program

Motion SFC program example for position follow-up control is shown below. This program is started using S(P).SFCS instruction from PLC CPU (CPU No.1).

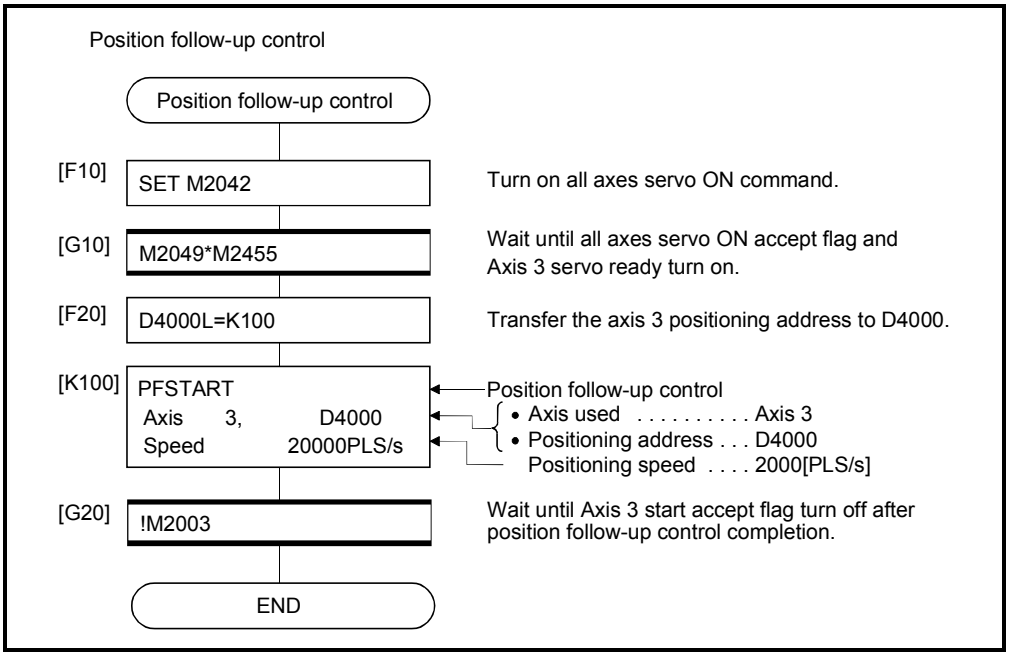

(Note): Example of the above Motion SFC program is started using the automatic start or PLC program.

(b) PLC program

PLC program example for position follow-up control is shown below.

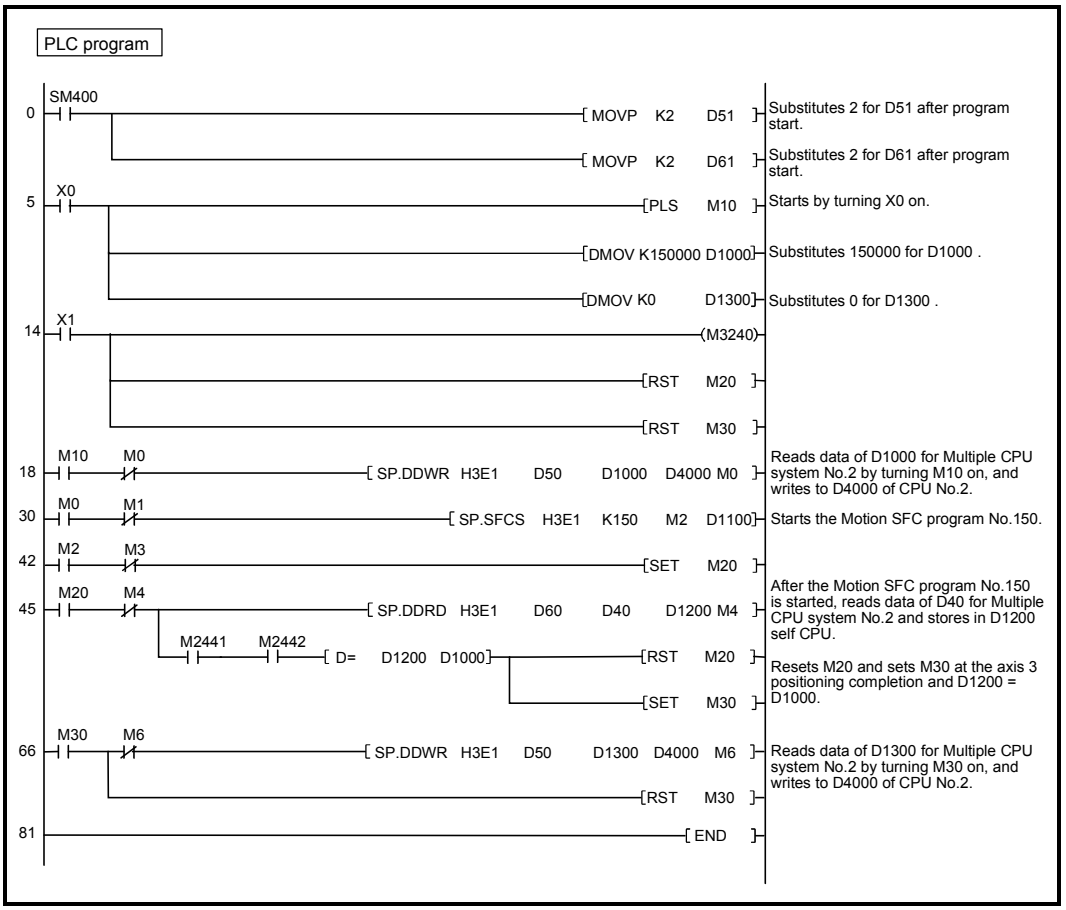

(Note): The CPU shared memory setting example for position follow-up control is shown next page.

(c) Parameter setting

The CPU shared memory setting example for position follow-up control is shown below.

CPU No. 1 (PLC CPU) (GX Developer)

Multiple CPU Setting (setting 1: M2400 to M2495)

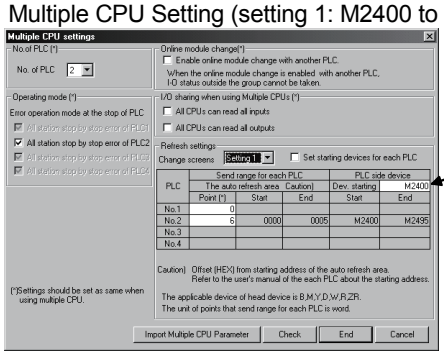

• CPU shared memory setting

Multiple CPU Setting (setting 2: M3200 to M3295)

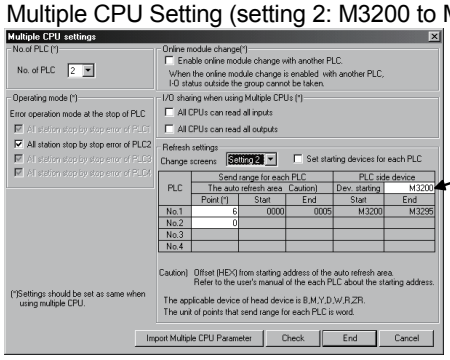

• CPU shared memory setting

CPU No. 2 (Motion CPU) (SW6RN-GSV□P)

Multiple CPU Setting (setting 1: M2400 to M2495)

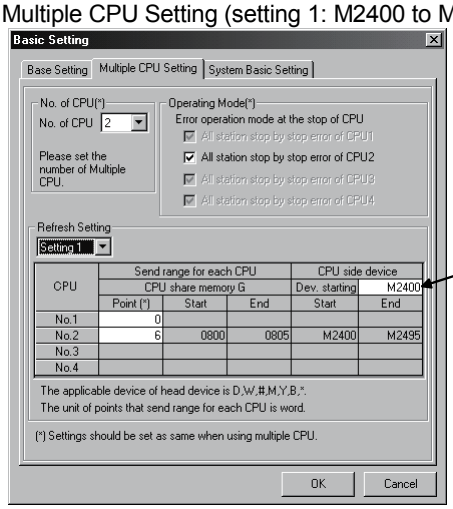

• CPU shared memory setting

Multiple CPU Setting (setting 2: M3200 to M3295)

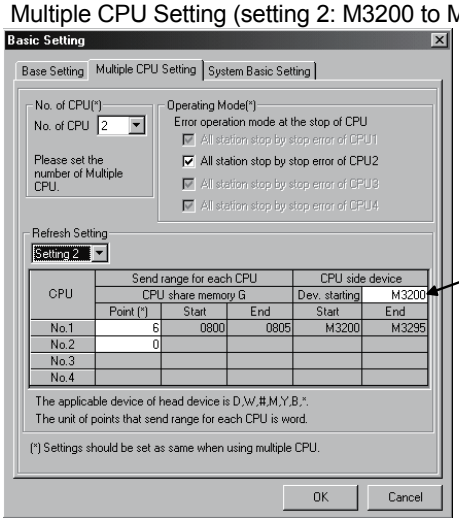

• CPU shared memory setting

6.19 Speed control with fixed position stop

Speed control with fixed position stop of the specified axis is executed.
Speed control with fixed position stop is started using the PVF (forward rotation) or PVR (reverse rotation) of servo program instruction.

Servo instruction	Positioning method	Number of control axes	Items are set in peripheral devices																							Speed change
			Common							Arc			Parameter block										Others				
			Parameter block No.	Axis	Address/travel value	Command speed	Dwell time	M-code	Torque limit value	Auxiliary point	Radius	Central point	Control unit	Speed limit value	Acceleration time	Deceleration time	Rapid stop deceleration time	Torque limit value	Deceleration processing on stop input	Allowable error range for circular interpolation	S-curve ratio	Cancel	WAIT-ON/OFF	Fixed position stop accel./decel.time	Fixed position stop	
PVF	Absolute	1	△	○	○	○	△	△						△		△	△	△	△		△	△		○	○	Valid
PVR	Absolute	1	△	○	○	○	△	△						△		△	△	△	△		△	△		○	○	Valid

○: Must be set
△: Set if required

[Control details]

(1) After starting of servomotor, control at the specified speed is executed until the fixed position stop command turns on.
- PVF..... Forward rotation direction (Address increase direction) start
- PVR..... Reverse rotation direction (Address decrease direction) start

(2) When the fixed position stop command turns on, a positioning control to the specified address is executed.

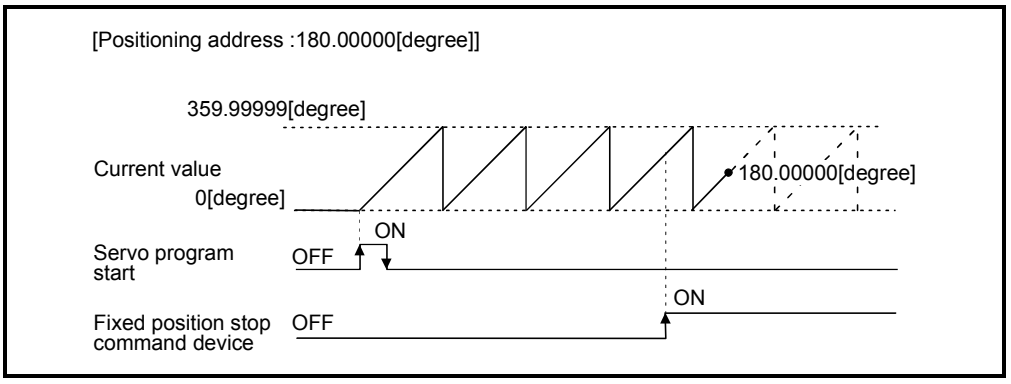

(3) It can be controlled in the real mode only for axis which "control unit is [degree] and stroke limit is invalid ("upper stroke limit value" equal to "lower stroke limit value")". If it is started for axis which "control unit is except [degree] or stroke limit is not invalid", a minor error [130] occurs and it does not start.
And, if it is started for the virtual servomotor axis in the virtual mode, a servo program setting error [905] occurs and it does not start. (It can be started for real mode axis.)

(4) Address setting range is 0 to 35999999 (0 to 359.99999[degree]) in the indirect setting of positioning address. If it is set outside the setting range, a servo program setting error [n03] occurs and it does not start. Positioning address is input at the program start.

(5) It is controlled in the fixed position stop acceleration/deceleration time set in the servo program at the time of positioning start, speed change request (CHGV) and fixed position stop command ON. The fixed acceleration/deceleration time method is used as an acceleration/deceleration processing in this case.

(6) The setting range of fixed position stop acceleration/deceleration time is 1 to 65536[ms].

(7) In the case of indirect setting, the fixed position stop acceleration/deceleration time is input in the following timing.
- Positioning start
- Speed change request (CHGV)
- Fixed position stop command ON

(8) When the positioning to specified address completes, the positioning complete signal (M2401+20n) turns on. It does not turn on at the time of stop by the stop command (M3200+20n)/rapid stop command (M3201+20n). The positioning complete signal (M2401+20n) turns off by turning the complete signal OFF command (M3204+20n) off to on or positioning start.

(9) Speed change can be executed any number of times by the speed change request (CHGV) instruction during operation.

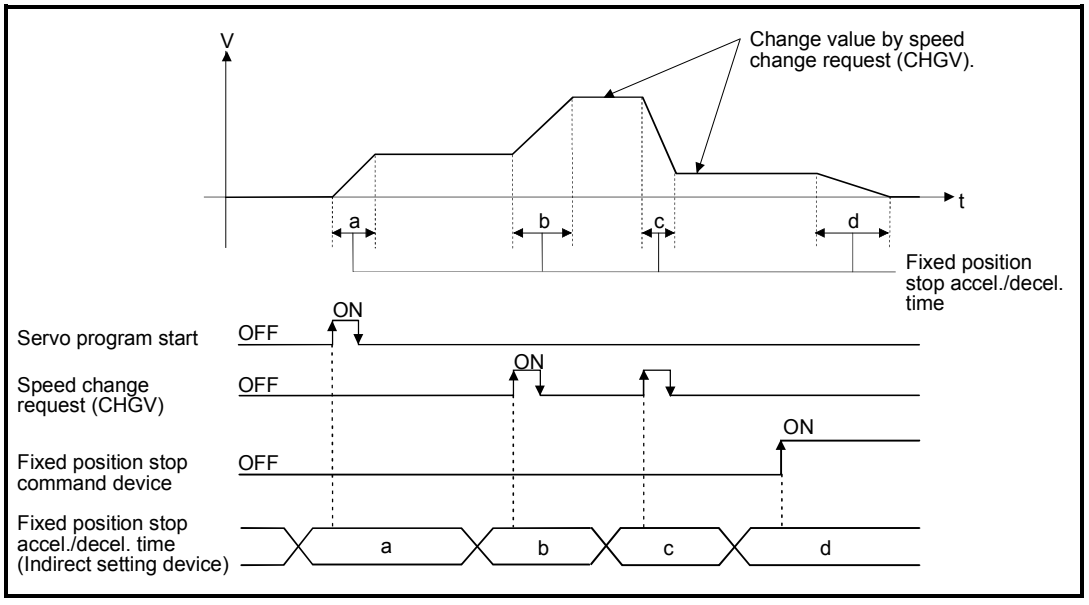

(10) Deceleration speed by the stop command (M3200+20n)/rapid stop command (M3201+20n) is controlled with fixed inclination (deceleration speed). Deceleration processing is executed using the speed limit value or deceleration/ rapid stop deceleration time set in the parameter block.

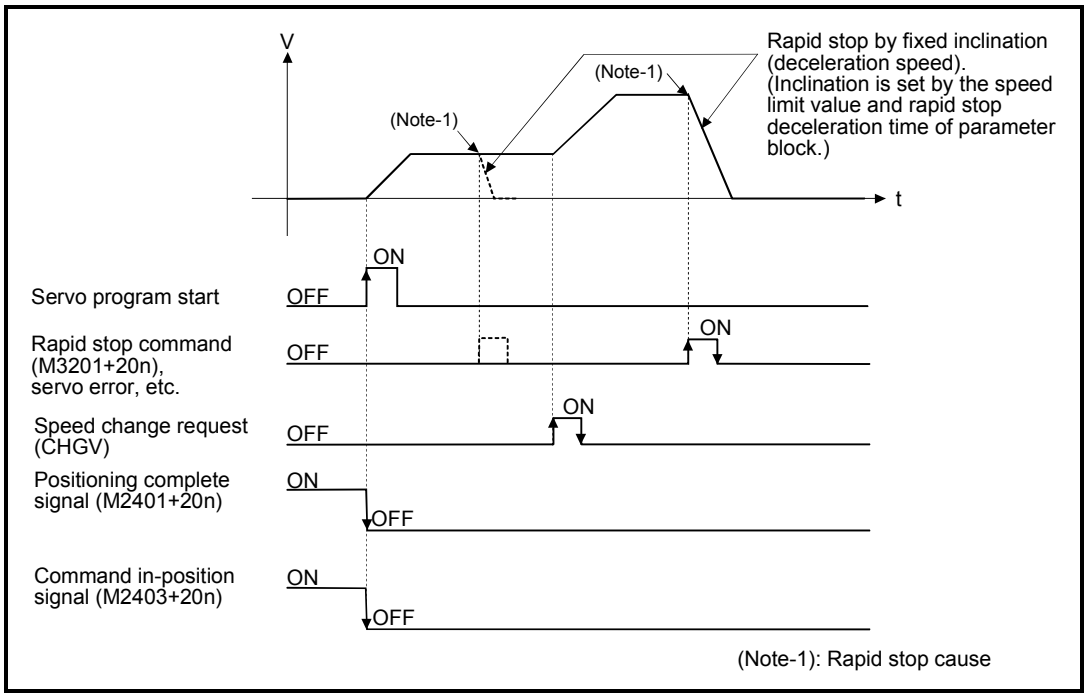

(11) When the fixed position stop command turns on, the command in-position check starts. When the absolute value of difference between the setting address and feed current value below the "command in-position range" set in the fixed parameter, the command in-position signal (M2403+20n) turns on. The command in-position signal (M2403+20n) turns on by a positioning start.

[Program]

Program for speed control with fixed position stop is shown as the following conditions.

(1) System configuration

Speed control with fixed position stop for "Axis 1.

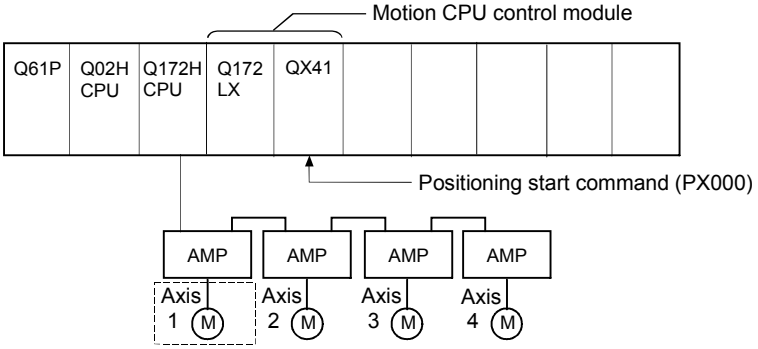

(2) Positioning conditions

(a) Speed control with fixed position stop conditions are shown below.

Item	Setting
Servo program No.	55
Start direction	Forward
Control axis	Axis 1
Positioning address	120.00000[degree]
Control speed	30000[degree/min]
Acceleration/deceleration time	20ms
Fixed position stop command device	M100

(b) Speed control with fixed position stop start command
.....Turning PX000 off to on (OFF → ON)

(c) Speed control with fixed position stop stop command
.....Turning PX000 on to off (ON → OFF)

(3) Operation timing

Operation timing for speed control with fixed position stop is shown below.

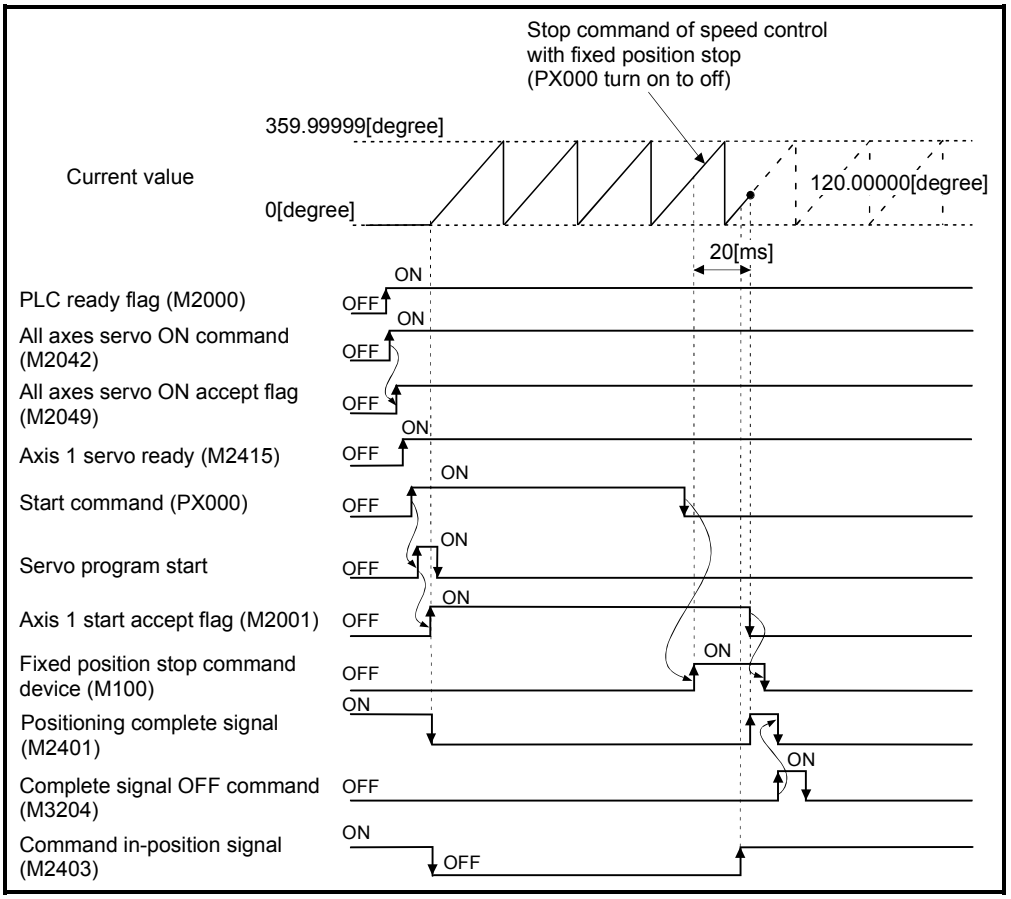

(4) Servo program

Servo program No.55 for speed control with fixed position stop is shown below.

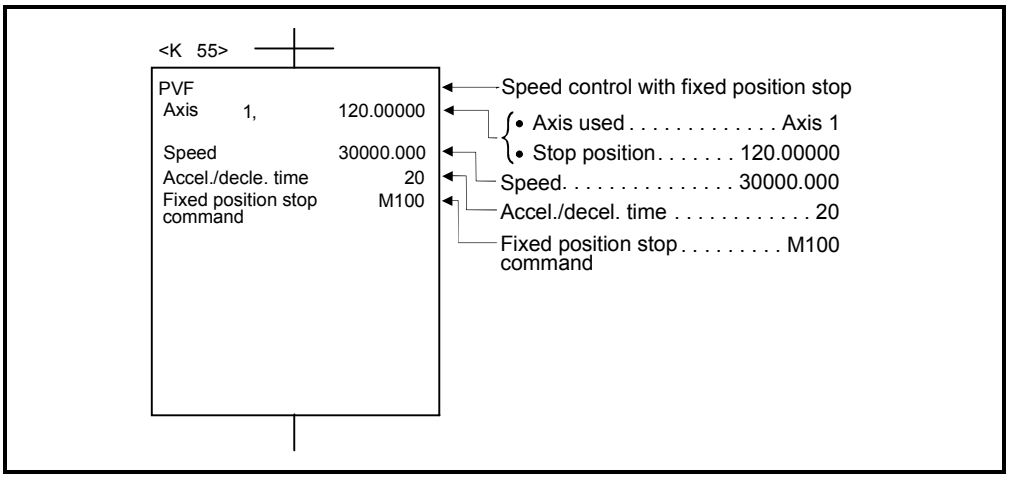

(Note): Example of the Motion SFC program for positioning control is shown next page.

(5) Motion SFC program

Motion SFC program for which executes the servo program is shown below.

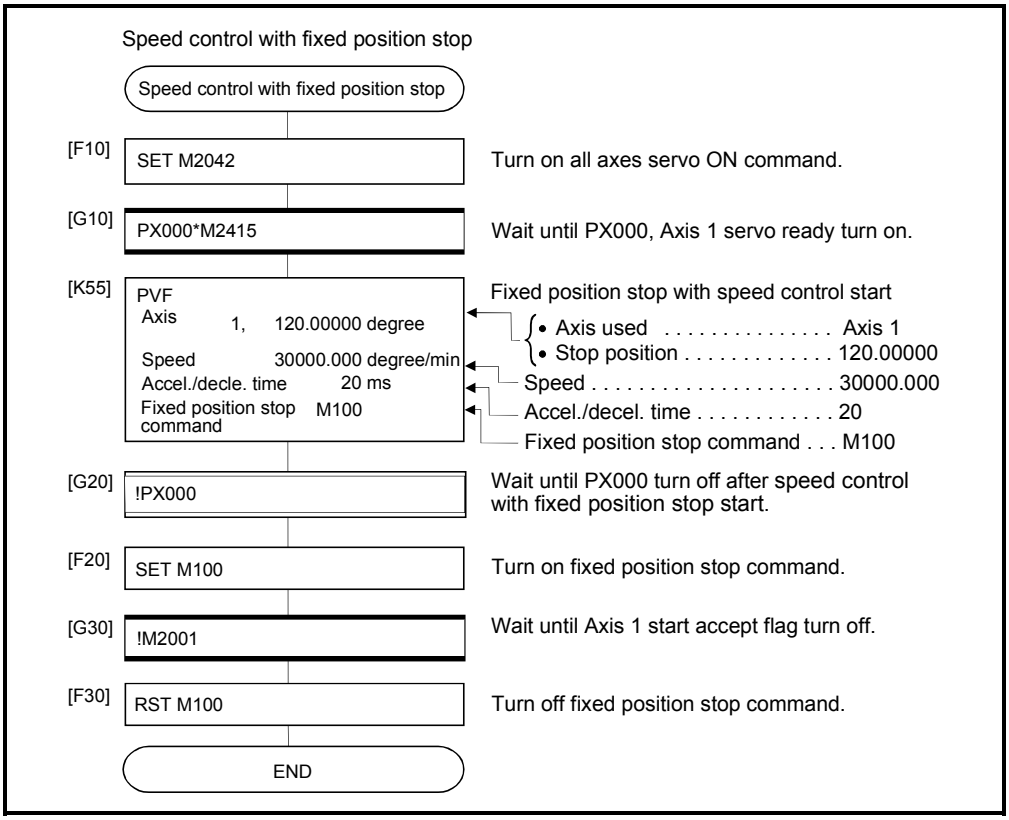

(Note): Example of the above Motion SFC program is started using the automatic start or PLC program.

6.20Simultaneous Start

Simultaneous start of the specified servo program at one start is executed.
Simultaneous start is started using the START servo program instruction.

Servo instruction	Positioning method	Number of control axes	Items are set in peripheral devices																							Speed change
			Common							Arc			Parameter block											Others		
			Parameter block No.	Axis	Address/travel value	Command speed	Dwell time	M-code	Torque limit value	Auxiliary point	Radius	Central point	Control unit	Speed limit value	Acceleration time	Deceleration time	Rapid stop deceleration time	Torque limit value	Deceleration processing on stop input	Allowable error range for circular interpolation	S-curve ratio	Others	Program No.		
START	＊	＊																					○		＊

○: Must be set
＊: It changes by the servo program for simultaneous start.

[Control details]

Control using START instruction

(1) Simultaneous start of the specified servo programs is executed.

(2) The servo program except for the simultaneous start (START instruction) can be specified.

(3) Up to 3 servo programs can be specified.

(4) Each axis is controlled using the specified servo program after the simultaneous start.

[Cautions]

(1) A check is made at the start. An error occurs and operation does not start in the following cases.

Error	Error processing	Stored codes	
		D9189	D9190
Specified servo program does not exist.	Servo program setting error flag (M9079): ON Start accept flag (M2001+n): OFF	Erroneous program No. of simultaneous start.	19
START instruction is set as the specified servo program.			
The specified servo program start axis is already used.			
A servo program cannot start by an error.		Erroneous program No. of program specified with simultaneous start.	Error Item data (Refer to Section 3.5)

(2) The servo program No. specified using START instruction cannot be set indirectly.

[Program]

Program for simultaneous start is shown as the following conditions.

(1) System configuration

Simultaneous start for "Axis 1 and Axis 2", Axis 3 and Axis 4.

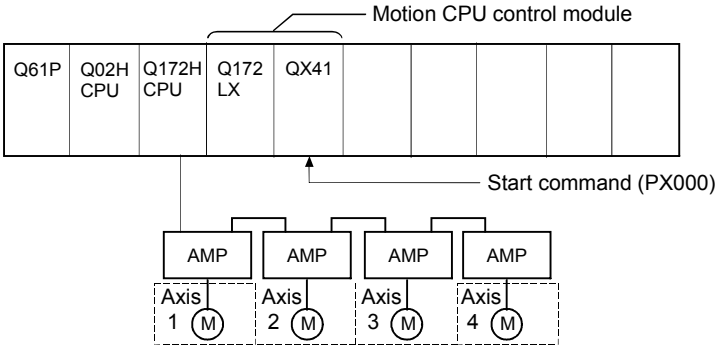

(2) Number of specified servo programs and program No.

(a) Number of specified servo programs : 3

(b) Specified servo program No. are shown below.

Servo Program No.	Used axis	Control Details
No.1	Axis 1, Axis 2	Circular interpolation control
No.14	Axis 3	Speed control
No.45	Axis 4	Home position return control

(3) Start conditions

(a) Simultaneous start servo program No. No.121

(b) Simultaneous start execute command ..... Turning PX000 off to on (OFF → ON)

(4) Servo program

Servo program No.121 for simultaneous start is shown below.

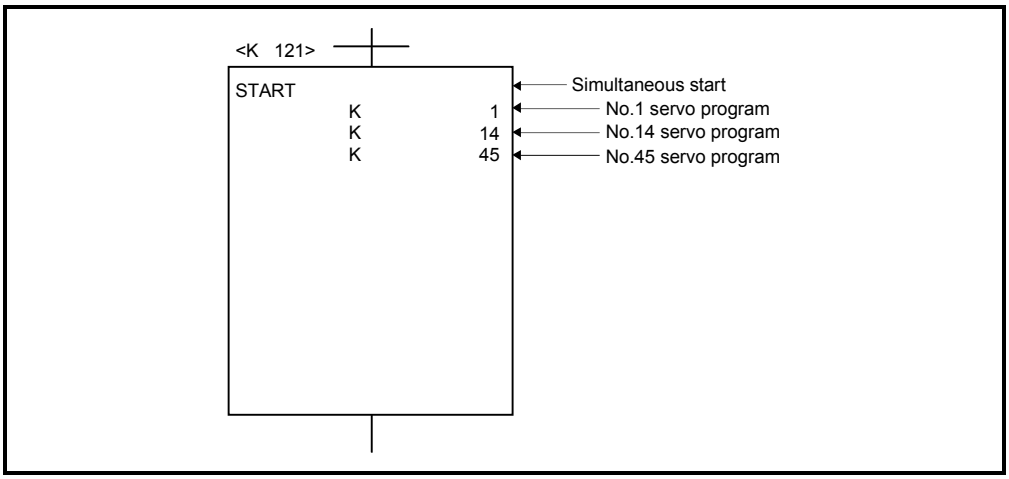

(Note): Example of the Motion SFC program for positioning control is shown next page.

(5) Motion SFC program

Motion SFC program for which executes the servo program is shown below.

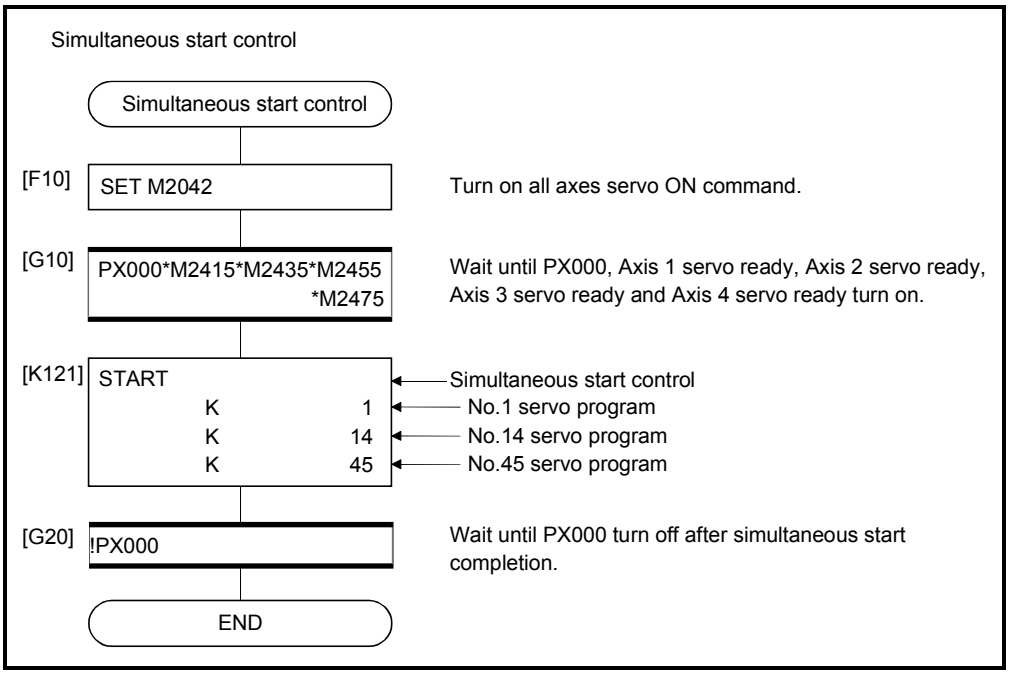

(Note): Example of the above Motion SFC program is started using the automatic start or PLC program.

6.21 JOG Operation

The setting JOG operation is executed.
Individual start or simultaneous start can be used in the JOG operation.
JOG operation can be executed using the Motion SFC program or test mode of peripheral device.
(Refer to the help of each software for JOG operation method using a peripheral device.)
JOG operation data must be set for each axis for JOG operation. (Refer to Section 6.21.1.)

6.21.1 JOG operation data

JOG operation data is the data required to execute JOG operation.
Set the JOG operation data using a peripheral device.

Table 6.2 JOG operation data list

No.	Item	Setting range								Initial value	Units	Remarks	Explanatory section
		mm		inch		degree		PLS					
		Setting range	Units	Setting range	Units	Setting range	Units	Setting range	Units				
1	JOG speed limit value	0.01 to 6000000.00	mm /min	0.001 to 600000.000	inch /min	0.001 to 2147483.647 (Note-1)	degree /min	1 to 2147483647	PLS/s	20000	PLS/s	• Sets the maximum speed at the JOG operation. • If JOG speed setting exceeds the JOG speed limit value, it is controlled with JOG speed limit value.	—
2	Parameter block setting	1 to 64								1	—	• Sets the parameter block No. to be used at the JOG operation.	4.3

(Note-1): When the "speed control 10×multiplier speed setting for degree axis" is set to "valid", the setting range is 0.01 to 21474836.47[degree/min].

(1) JOG operation data check
A relative check of the JOG operation data is executed at the following timing:
- JOG operation Individual start
- JOG operation simultaneous start
- JOG operation request

(2) Data error processing
- Only data for which detected errors is controlled as default value.
- The error code corresponding to each data for erroneous axis is stored in the data register.

POINT

Start to outside the range of stroke limit of fixed parameter cannot be executed.
However, JOG operation is possible in the direction from outside the stroke limit range to back inside the stroke limit range.

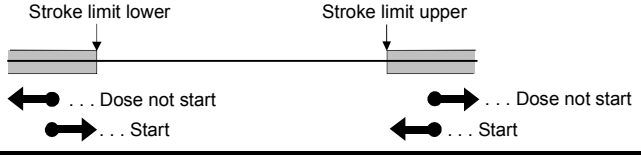

6.21.2 Individual start

JOG operation for the specified axes is started.
JOG operation is executed by the following JOG operation commands:

- Forward JOG start command ..... M3202+20n
- Reverse JOG start command ..... M3203+20n

[Control details]

(1) JOG operation continues at the JOG speed setting register value while the JOG operation command turns on, and a deceleration stop is made by the JOG operation command OFF.
Control of acceleration/deceleration is based on the data set in JOG operation data.

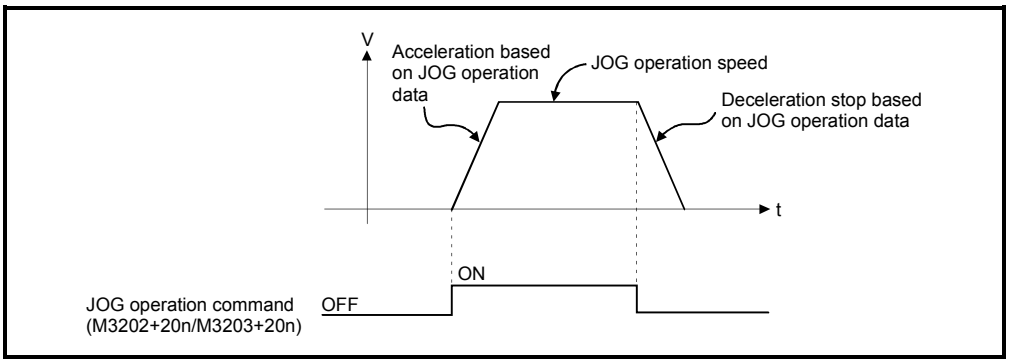

JOG operation for axis for which JOG operation command is turning on is executed.

(2) The setting range for JOG speed setting registers are shown below.

No. (Note)	JOG operation		JOG speed setting register		Setting range							
					mm		inch		degree		PLS	
	Forward JOG	Reverse JOG	Most significant	Least significant	Setting range	Units	Setting range	Units	Setting range	Units	Setting range	Units
1	M3202	M3203	D641	D640	1 to 600000000	$\times 10^{-2}$ mm /min	1 to 600000000	$\times 10^{-3}$ inch /min	1 to 2147483647	$\times 10^{-3}$ degree /min (Note-1)	1 to 2147483647	PLS/s
2	M3222	M3223	D643	D642								
3	M3242	M3243	D645	D644								
4	M3262	M3263	D647	D646								
5	M3282	M3283	D649	D648								
6	M3302	M3303	D651	D650								
7	M3322	M3323	D653	D652								
8	M3342	M3343	D655	D654								
9	M3362	M3363	D657	D656								
10	M3382	M3383	D659	D658								
11	M3402	M3403	D661	D660								
12	M3422	M3423	D663	D662								
13	M3442	M3443	D665	D664								
14	M3462	M3463	D667	D666								
15	M3482	M3483	D669	D668								
16	M3502	M3503	D671	D670								
17	M3522	M3523	D673	D672								
18	M3542	M3543	D675	D674								
19	M3562	M3563	D677	D676								
20	M3582	M3583	D679	D678								
21	M3602	M3603	D681	D680								
22	M3622	M3623	D683	D682								
23	M3642	M3643	D685	D684								
24	M3662	M3663	D687	D686								
25	M3682	M3683	D689	D688								
26	M3702	M3703	D691	D690								
27	M3722	M3723	D693	D692								
28	M3742	M3743	D695	D694								
29	M3762	M3763	D697	D696								
30	M3782	M3783	D699	D698								
31	M3802	M3803	D701	D700								
32	M3822	M3823	D703	D702								

(Note-1) : When the "speed control 10× multiplier setting for degree axis" is set to "valid" in the fixed parameter, the unit is "$\times 10^{-2}$[degree/min] ".
(Note-2): The range of axis No.1 to 8 is valid in the Q172HCPU.

POINT

When the JOG operation speed is set in the Motion SFC program, stores a value which is 100 times the real speed in units of [mm] or 1000 times the speed in units of [inch] or [degree] in the JOG speed setting register.

Example

If JOG operation speed of 6000.00[mm/min] is set, stores the value "600000" in the JOG speed setting register.

(Note): Store a value which is 100 times the real speed in the JOG speed setting register for the "degree axis control 10× multiplier speed setting valid".

[Cautions]

(1) If the forward JOG start command (M3202+20n) and reverse JOG start command (M3203+20n) turn on simultaneously for a single axis, the forward JOG operation is executed.
When a deceleration stop is made by the forward JOG start command OFF the reverse JOG operation is not executed even if the reverse JOG start command is ON. After that, when the reverse JOG start command turns off to on, the reverse JOG operation is executed.

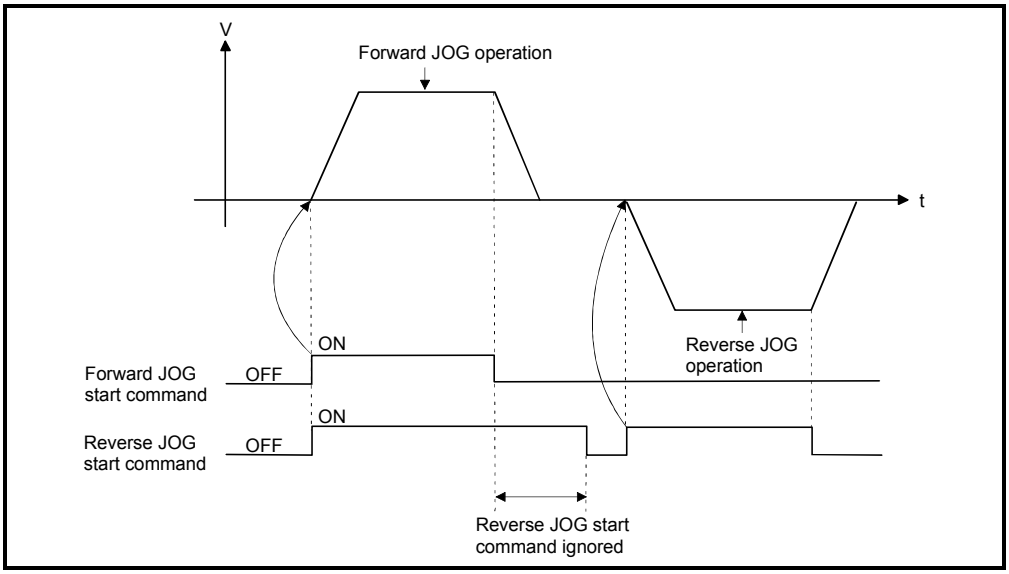

(2) If the JOG operation command (M3202+20n/M3203+20n) turns on during deceleration by the JOG operation command OFF, after deceleration stop, JOG operation is not executed.
After that, the JOG operation is executed by the JOG operation command OFF to ON.

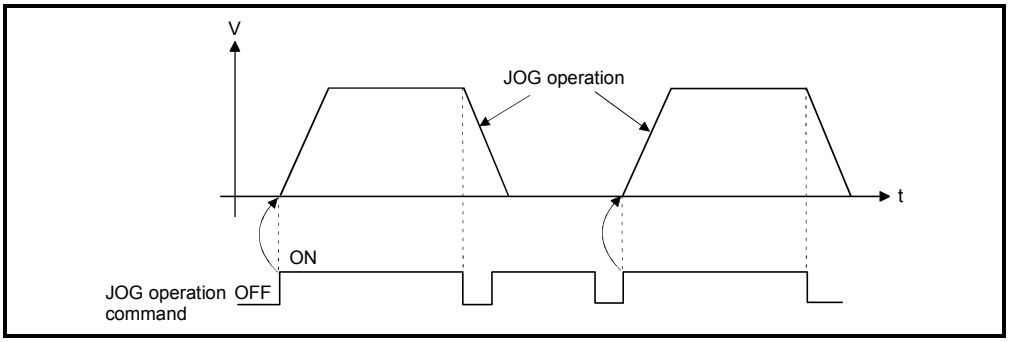

(3) JOG operation by the JOG operation command (M3202+20n/M3203+20n) is not executed during the test mode using a peripheral devices.
After release of test mode, the JOG operation is executed by turning the JOG operation command off to on.

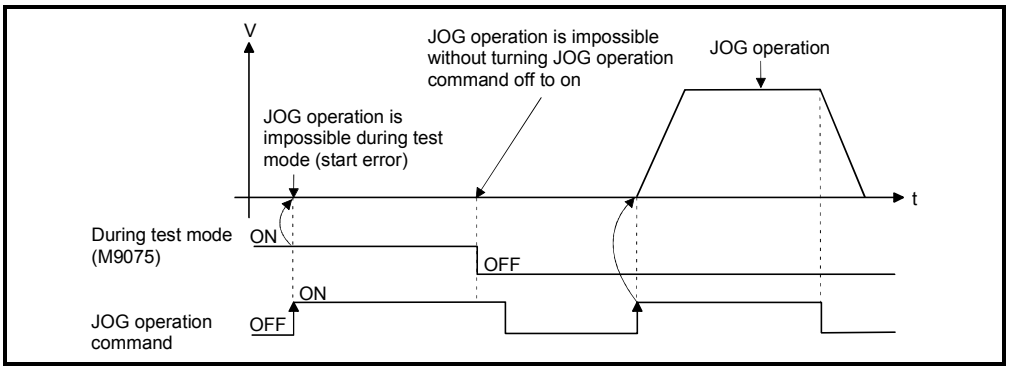

[Program]

Program for JOG operation is shown as the following conditions.

(1) System configuration

JOG operation for Axis 1 and Axis 2.

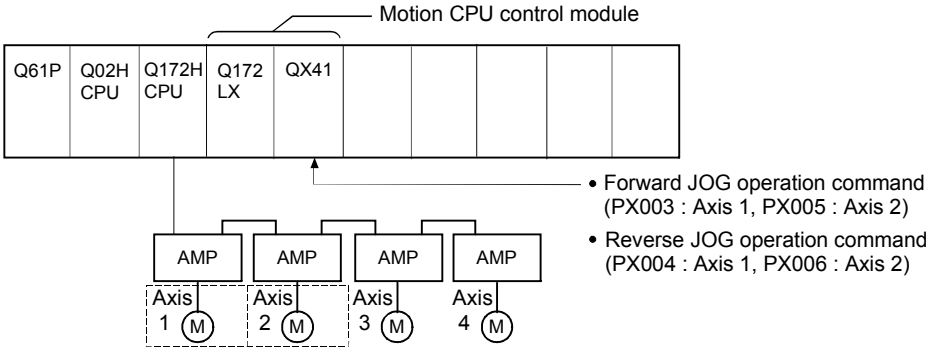

(2) JOG operation conditions

(a) Axis No. ..... Axis 1, Axis 2

(b) JOG operation speed 100000

(c) JOG operation commands

1) Forward JOG operation ..... Axis 1: PX003 ON, Axis 2: PX005 ON

2) Reverse JOG operation ..... Axis 1: PX004 ON, Axis 2: PX006 ON

(3) Motion SFC program

Motion SFC program for which executes JOG operation is shown below.

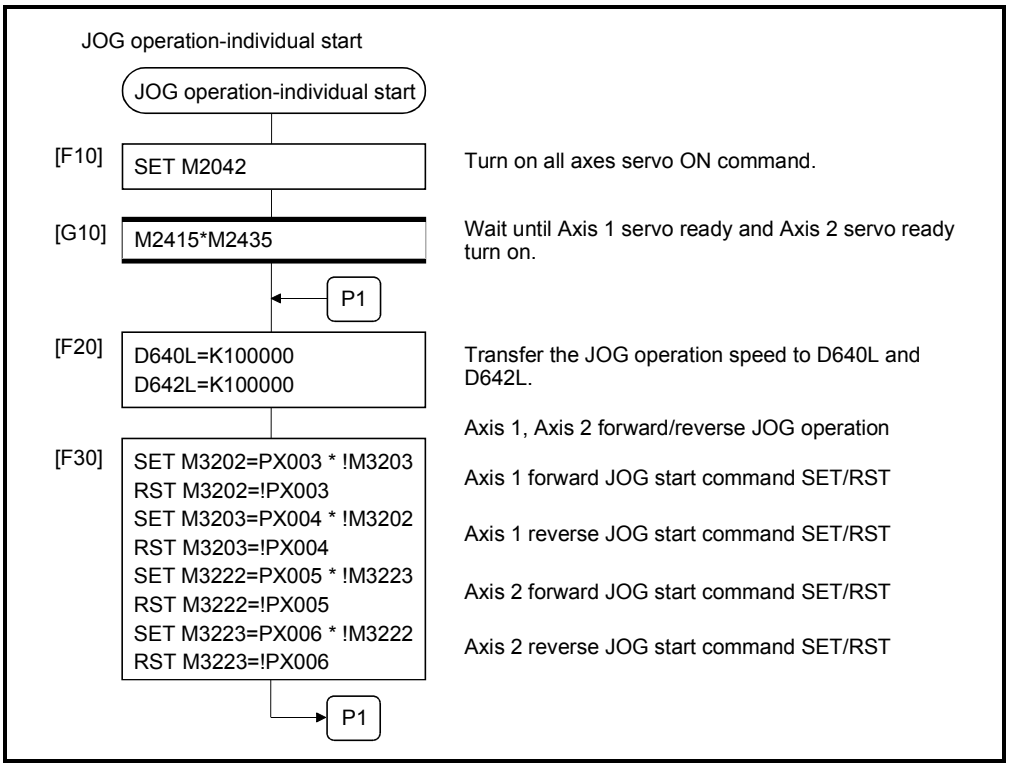

(Note): Example of the above Motion SFC program is started using the automatic start or PLC program.

6.21.3 Simultaneous start

[Control details]

Simultaneous start JOG operation for specified multiple axes.

(1) JOG operation continues at the JOG speed setting register value for each axis while the JOG operation simultaneous start command (M2048) turns on, and a deceleration stop is made by the M2048 OFF.
Control of acceleration/deceleration is based on the data set in the JOG operation data.

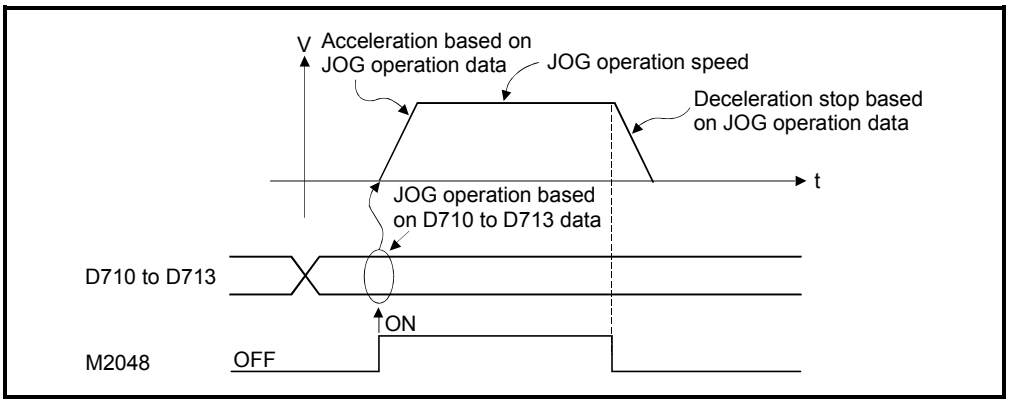

(2) JOG operation axis is set in the JOG operation simultaneous start axis setting register (D710 to D713).

	b15	b14	b13	b12	b11	b10	b9	b8	b7	b6	b5	b4	b3	b2	b1	b0	
D710	Axis 16	Axis 15	Axis 14	Axis 13	Axis 12	Axis 11	Axis 10	Axis 9	Axis 8	Axis 7	Axis 6	Axis 5	Axis 4	Axis 3	Axis 2	Axis 1	Forward rotation JOG
D711	Axis 32	Axis 31	Axis 30	Axis 29	Axis 28	Axis 27	Axis 26	Axis 25	Axis 24	Axis 23	Axis 22	Axis 21	Axis 20	Axis 19	Axis 18	Axis 17	
D712	Axis 16	Axis 15	Axis 14	Axis 13	Axis 12	Axis 11	Axis 10	Axis 9	Axis 8	Axis 7	Axis 6	Axis 5	Axis 4	Axis 3	Axis 2	Axis 1	Reverse rotation JOG
D713	Axis 32	Axis 31	Axis 30	Axis 29	Axis 28	Axis 27	Axis 26	Axis 25	Axis 24	Axis 23	Axis 22	Axis 21	Axis 20	Axis 19	Axis 18	Axis 17	

(Note-1) Set the JOG operation simultaneous start axis with 1/0.
1: Simultaneous start is executed
0: Simultaneous start is not executed
(Note-2) The range of axis No.1 to 8 is valid in the Q172HCPU.

(3) The setting range for JOG speed setting registers are shown below.

No. (Note)	JOG operation		JOG speed setting register		Setting range							
					mm		inch		degree		PLS	
	Forward JOG	Reverse JOG	Most significant	Least significant	Setting range	Units	Setting range	Units	Setting range	Units	Setting range	Units
1	M3202	M3203	D641	D640	1 to 600000000	$\times 10^{-2}$ mm /min	1 to 600000000	$\times 10^{-3}$ inch /min	1 to 2147483647	$\times 10^{-3}$ degree /min (Note-1)	1 to 2147483647	PLS/s
2	M3222	M3223	D643	D642								
3	M3242	M3243	D645	D644								
4	M3262	M3263	D647	D646								
5	M3282	M3283	D649	D648								
6	M3302	M3303	D651	D650								
7	M3322	M3323	D653	D652								
8	M3342	M3343	D655	D654								
9	M3362	M3363	D657	D656								
10	M3382	M3383	D659	D658								
11	M3402	M3403	D661	D660								
12	M3422	M3423	D663	D662								
13	M3442	M3443	D665	D664								
14	M3462	M3463	D667	D666								
15	M3482	M3483	D669	D668								
16	M3502	M3503	D671	D670								
17	M3522	M3523	D673	D672								
18	M3542	M3543	D675	D674								
19	M3562	M3563	D677	D676								
20	M3582	M3583	D679	D678								
21	M3602	M3603	D681	D680								
22	M3622	M3623	D683	D682								
23	M3642	M3643	D685	D684								
24	M3662	M3663	D687	D686								
25	M3682	M3683	D689	D688								
26	M3702	M3703	D691	D690								
27	M3722	M3723	D693	D692								
28	M3742	M3743	D695	D694								
29	M3762	M3763	D697	D696								
30	M3782	M3783	D699	D698								
31	M3802	M3803	D701	D700								
32	M3822	M3823	D703	D702								

(Note-1): When the "speed control 10 $\times$ multiplier setting for degree axis" is set to "valid" in the fixed parameter, the unit is " $\times 10^{-2}$[degree/min] ".
(Note-2): The range of axis No.1 to 8 is valid in the Q172HCPU.

[Program]

Program for simultaneous start of JOG operations are shown as the following conditions.

(1) System configuration

JOG operation for Axis 1 and Axis 2.

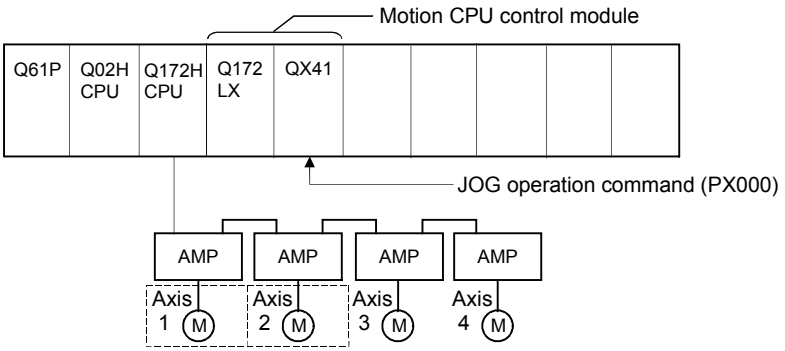

(2) JOG operation conditions

(a) JOG operation conditions are shown below.

Item	JOG operation conditions	
Axis No.	Axis 1	Axis 2
JOG operation speed	150000	150000

(b) JOG operation command ..... During PX000 ON

(3) Motion SFC program

Motion SFC program for which executes the simultaneous start of JOG operation is shown below.

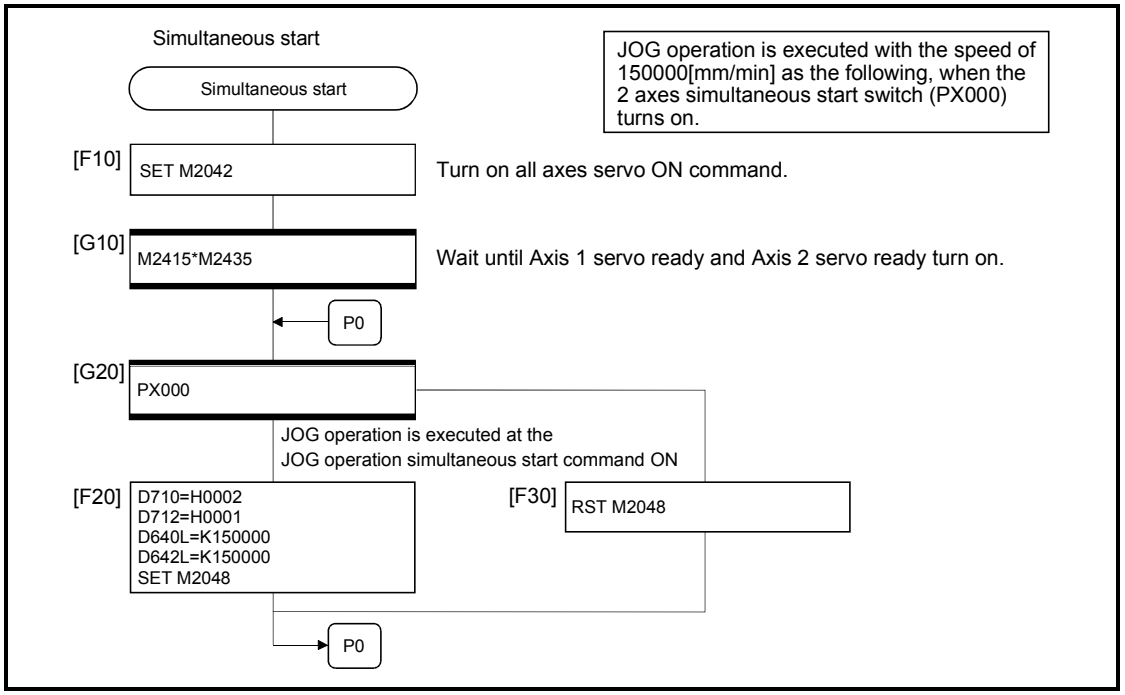

(Note): Example of the above Motion SFC program is started using the automatic start or PLC program.

6.22 Manual Pulse Generator Operation

Positioning control based on the number of pulses inputted from the manual pulse generator is executed.
Simultaneous operation for 1 to 3 axes is possible with one manual pulse generator, the number of connectable modules are shown below.

Number of connectable to the manual pulse generator
3

POINT

- When two or more Q173PXs are installed, connect the manual pulse generator to first (It counts from 0 slot of the CPU base) Q173PX.
  (When the manual pulse generator is used, only first Q173PX is valid.)

[Control details]

(1) Positioning of the axis set in the manual pulse generator axis setting register based on the pulse input from the manual pulse generator.
Manual pulse generator operation is only valid while the manual pulse generator enable flag turn ON.

Manual pulse generator connecting position	Manual pulse generator axis No. setting register	Manual pulse generator enable flag
P1	D714, D715	M2051
P2	D716, D717	M2052
P3	D718, D719	M2053

(2) The travel value and output speed for positioning control based on the pulse input from manual pulse generator are shown below.
(a) Travel value
The travel value based on the pulse input from a manual pulse generator is calculated using the following formula.

[Travel value] = [Travel value per pulse] × [Number of input pulses] × [Manual pulse generator 1- pulse input magnification setting]

The travel value per pulse for manual pulse generator operation is shown below.

Unit	Travel value
mm	0.1 [μm]
inch	0.00001 [inch]
degree	0.00001 [degree]
PLS	1 [PLS]

If units is [mm], the command travel value for input of one pulse is:
(0.1[μm]) × (1[PLS]) × (Manual pulse generator 1- pulse input magnification setting)

(b) Output speed

The output speed is the positioning speed corresponding to the number of pulses input from a manual pulse generator in unit time.

[Output speed] = [Number of input pulses per 1[ms]] × [Manual pulse generator 1- pulse input magnification setting]

(3) Setting of the axis operated by the manual pulse generator

The axis operated by the manual pulse generator is set in the manual pulse generator axis setting register (D714 to D719).
The bit corresponding to the axis controlled (1 to 32) is set.

(4) Manual pulse generator 1- pulse input magnification setting

Make magnification setting for 1- pulse input from the manual pulse generator for each axis.

1- pulse input magnification setting register	Applicable axis No. (Note-1)	Setting range
D720	Axis 1	1 to 10000
D721	Axis 2	
D722	Axis 3	
D723	Axis 4	
D724	Axis 5	
D725	Axis 6	
D726	Axis 7	
D727	Axis 8	
D728	Axis 9	
D729	Axis 10	
D730	Axis 11	
D731	Axis 12	
D732	Axis 13	
D733	Axis 14	
D734	Axis 15	
D735	Axis 16	
D736	Axis 17	
D737	Axis 18	
D738	Axis 19	
D739	Axis 20	
D740	Axis 21	
D741	Axis 22	
D742	Axis 23	
D743	Axis 24	
D744	Axis 25	
D745	Axis 26	
D746	Axis 27	
D747	Axis 28	
D748	Axis 29	
D749	Axis 30	
D750	Axis 31	
D751	Axis 32	

(Note-1): The range of axis No.1 to 8 is valid in the Q172HCPU.

(Note): The manual pulse generator does not have the speed limit value, so they set the magnification setting within the related speed of servomotor.

(5) The setting manual pulse generator 1- pulse input magnification checks the "1-pulse input magnification setting registers of the manual pulse generator" of the applicable axis at the turning manual pulse generator enable flag turns off to on. If the value is outside of range, the manual pulse generator axis setting error register (D9185 to D9187) and manual pulse generator axis setting error flag (M9077) are set and a value of "1" is used for the magnification.

(6) Manual pulse generator smoothing magnification setting
A magnification to smooth the turning the manual pulse generator operation off to on or on to off is set.

Manual pulse generator smoothing magnification setting register	Setting range
Manual pulse generator 1 (P1): D752	0 to 59
Manual pulse generator 2 (P2): D753	
Manual pulse generator 3 (P3): D754	

(a) Operation

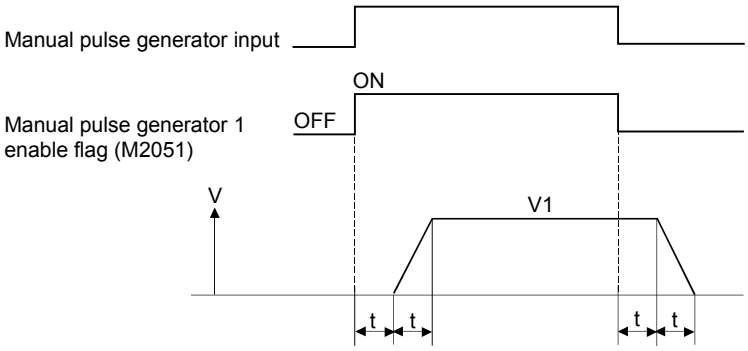

Output speed (V1) = [Number of input pulses/ms] × [Manual pulse generator 1- pulse input magnification setting]

Travel value (L) = [Travel value per pulse] × [Number of input pulses] × [Manual pulse generator 1-pulse input magnification setting]

(b) When the smoothing magnification is set, the smoothing time constant is as following formula.
Smoothing time constant (t) = (Smoothing magnification + 1) × 56.8 [ms]

REMARK

The smoothing time constant is within the range of 56.8 to 3408 [ms].

(7) Errors details at the data setting for manual pulse generator operation are shown below.

Error details	Error processing
Axis set to manual pulse generator operation is specified.	• Duplicated specified axis is ignored. • First setting manual pulse generator operation is executed.
Axis setting is 4 axes or more	• Manual pulse generator operation is executed according to valid for 3 axes from the lowest manual pulse generator axis setting register.
All of bit is "0" for the effective axis No. of manual pulse generator axis No. setting register.	• Manual pulse generator operation is not executed.

[Cautions]

(1) The start accept flag turns on for axis during manual pulse generator operation. Positioning control or home position return cannot be started using the Motion CPU or a peripheral device.
Turn off the manual pulse generator enable flag after the manual pulse generator operation end.

(2) The torque limit value is fixed at 300[%] during manual pulse generator operation.

(3) If the manual pulse generator enable flag turns on for the starting axis by positioning control or JOG operation, an error [214] is set to the applicable axis and manual pulse generator input is not enabled. After the axis has been stopped, the turning off to on of the manual pulse generator enable flag becomes valid, the start accept flag turns on by the manual pulse generator input enabled status, and input from the manual pulse generator is input.

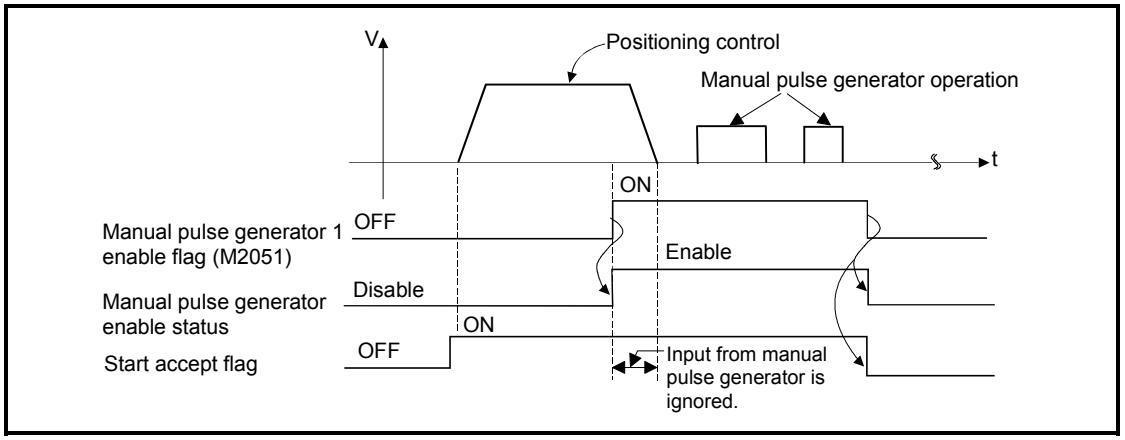

(4) If the manual pulse generator enable flag of another manual pulse generator No. turns on for axis during manual pulse generator operation, an error [214] is set to the applicable axis and the input of that manual pulse generator is not enabled. Turn the manual pulse generator enable flag on again after stopping the manual pulse generator operation which had become input enable previously.

(5) If the manual pulse generator enable flag turns on again for axis during smoothing deceleration after manual pulse generator enable flag turns off, an error [214] is set and manual pulse generator input is not enabled. Turn the manual pulse generator enable flag on after smoothing deceleration stop (after the start accept flag OFF).

(6) If another axis is set and the same manual pulse generator enable flag turns on again during smoothing deceleration after manual pulse generator enable flag turns off, the manual pulse generator input is not enabled.
At this time, the manual pulse generator axis setting error bit of the manual pulse generator axis setting error storage register (D9185 to D9187) turns on, and the manual pulse generator axis setting error flag (M9077) turns on.
Include the start accept flag OFF for specified axis in interlocks as the conditions which turn on the manual pulse generator enable flag.

[Procedure for manual pulse generator operation]

Procedure for manual pulse generator operation is shown below.

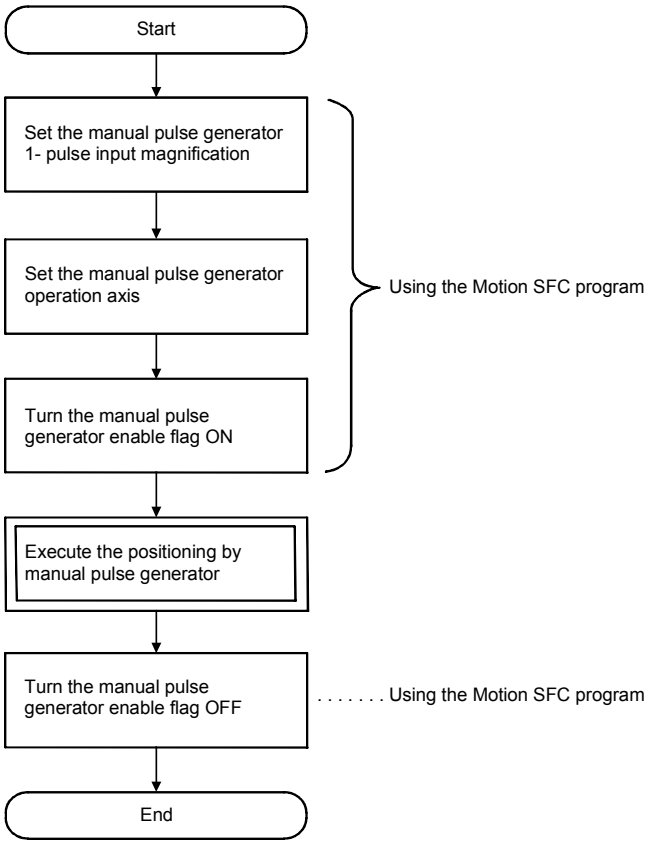

[Program]

Program executes manual pulse generator operation is shown as the following conditions.

(1) System configuration

Manual pulse generator operation of Axis 1 and Axis 2.

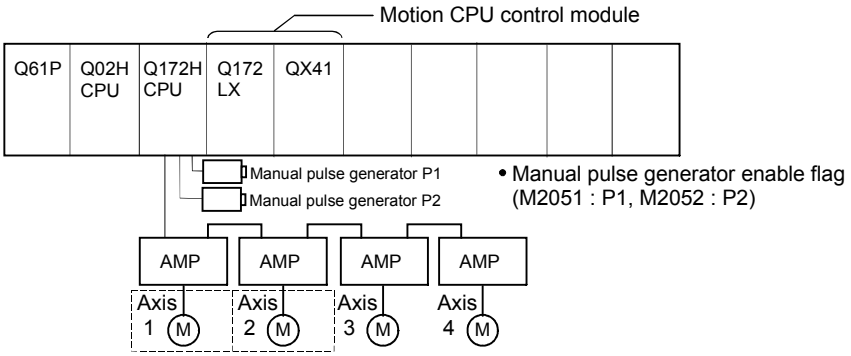

(2) Manual pulse generator operation conditions

(a) Manual pulse generator operation axis.....Axis 1, Axis 2

(b) Manual pulse generator 1- pulse input magnification..... 100

(c) Manual pulse generator operation enable .....M2051 (Axis 1)/
M2052 (Axis 2) ON

(d) Manual pulse generator operation end .....M2051 (Axis 1)/
M2052 (Axis 2) OFF

(3) Motion SFC program

Motion SFC program for manual pulse generator operation is shown below.

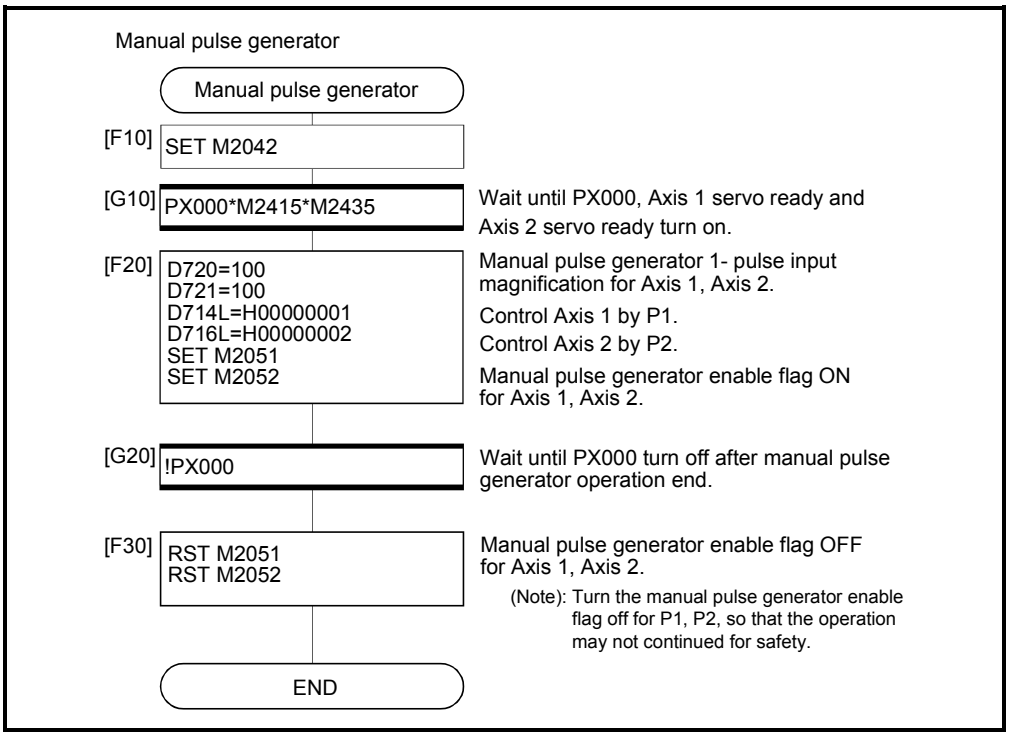

(Note): Example of the above Motion SFC program is started using the automatic start or PLC program.

6.23 Home Position Return

(1) Use the home position return at the power supply ON and other times where confirmation of axis is at the machine home position is required.

(2) The following six methods for home position return are shown below.
- Proximity dog type
- Count type
- Data set type
- Dog cradle type
- Stopper type
- Limit switch combined type

(3) The home position return data must be set for each axis to execute the home position return.

(4) Select the optimal home position return method for the system configuration and applications with reference to the following.

Home position return methods		Contents	Applications
Proximity dog type	Proximity dog type 1	• Home position is zero point of servomotor. • When the proximity dog is ON, it cannot be started.	• It is used in the system which can surely pass a zero point from the home position return start to proximity dog ON → OFF.
	Proximity dog type 2	• Home position is zero point of servomotor. • When the proximity dog is ON, it can be started.	• This method is valid when the stroke range is short and "proximity dog type 1" cannot be used.
Count type (Note)	Count type 1	• Home position is zero point of servomotor.	• It is used in the system which can surely pass a zero point from the home position return start to point of travel distance set as "travel value after proximity dog ON".
	Count type 2	• Zero point is not used in the home position return.	• This method is used when the proximity dog is near the stroke end and the stroke range is narrow.
	Count type 3	• Home position is zero point of servomotor.	• This method is valid when the stroke range is short and "count type 1" cannot be used.
Data set type	Data set type 1	• Home position is command position of Motion CPU.	• External input signals such as dog signal are not set in the absolute position system. • This method is valid for the data set independent of a deviation counter value.
	Data set type 2	• Home position is real position of servomotor.	• External input signals such as dog signal are not set in the absolute position system.
Dog cradle type		• Home position is zero point of servomotor immediately after the proximity dog signal ON.	• It is easy to set the position of proximity dog, because the proximity dog is set near the position made to the home position.
Stopper type	Stopper type 1	• Home position is position which stopped the machine by the stopper. • Proximity dog is used.	• This method is valid to improve home position accuracy in order to make the home position for the position which stopped the machine by the stopper.
	Stopper type 2	• Home position is position which stopped the machine by the stopper. • Proximity dog is not used.	
Limit switch combined type		• Home position is zero point of servomotor. • Proximity dog is not used. • External limit switch is surely used.	• It is used in the system that the proximity dog signal cannot be used and only external limit switch can be used.

(Note): If the proximity dog signal of servo amplifier is used, the count type home position return cannot be execute.

MEMO

6.23.1 Home position return data

This data is used to execute the home position return.
Set this data using a peripheral device.

Table 6.3 Home position return data list

No.	Item	Setting range								Initial value	Units	Indirect setting	
		mm		inch		degree		PLS					
		Setting range	Units	Setting range	Units	Setting range	Units	Setting range	Units			Valid/ invalid	Number of words
1	Home position return direction	0: Reverse direction (Address decrease direction) 1: Forward direction (Address increase direction)								0	—	—	—
2	Home position return method	0: Proximity dog type 1 4: Proximity dog type 2 1: Count type 1 5: Count type 2 6: Count type 3 2: Data set type 1 3: Data set type 2 7: Dog cradle type 8: Stopper type 1 9: Stopper type 2 10: Limit switch combined type								0	—	—	—
3	Home position address	-214748364.8 to 214748364.7	μm	-21474.83648 to 21474.83647	inch	0 to 359.99999	degree	-2147483648 to 2147483647	PLS	0	PLS	○	2
4	Home position return speed	0.01 to 6000000.00	mm/min	0.001 to 600000.000	inch/min	0.001 to 2147483.647 (Note-1)	degree/min	1 to 10000000	PLS/s	1	PLS/s	○	2
5	Creep speed	0.01 to 6000000.00	mm/min	0.001 to 600000.000	inch/min	0.001 to 2147483.647 (Note-1)	degree/min	1 to 10000000	PLS/s	1	PLS/s	○	2
6	Travel value after proximity dog ON	0.0 to 214748364.7	μm	0.00000 to 21474.83647	inch	0.00000 to 21474.83647	degree	0 to 2147483647	PLS	0	PLS	○	2
7	Parameter Block setting	1 to 64								1	—	—	—
8	Home position return retry function	0: Invalid (Do not execute the home position return retry by limit switch.) 1: Valid (Execute the home position return retry by limit switch.)								0	—	—	—
9	Dwell time at the home position return retry	0 to 5000 [ms]								0	ms	○	1
10	Home position shift amount	-214748364.8 to 214748364.7	μm	-21474.83648 to 21474.83647	inch	-21474.83648 to 21474.83647	degree	-2147483648 to 2147483647	PLS	0	PLS	○	2
11	Speed set at the home position shift	0: Home position return speed 1: Creep speed								0	—	—	—
12	Torque limit value at the creep speed	1 to 1000 [%]								300	%	○	1
13	Operation setting for incompletion of home position return	0: Execute a servo program 1: Not execute a servo program								1	—	—	—

	Remarks	Explanatory section
	• The home position return direction is set.	—
	• The home position return method is set. • The proximity dog type or count type are recommended for the servo amplifier which does not support absolute value.	—
	• The current value of home position after the home position return is set. • It is recommended that the home position address is set in the upper stroke limit value or lower stroke limit value.	—
	• The home position return speed is set.	—
	• The creep speed (low speed immediately before stopping after deceleration from home position return speed) after the proximity dog ON is set.	—
	• The travel value after the proximity dog ON for the count type is set. • More than the deceleration distance at the home position return speed is set.	6.23.1 (1)
	• The parameter block (Refer to Section 4.3) No. to use for home position return is set.	—
	• Valid/invalid of home position return retry is set.	6.23.1 (2)
	• The stop time at the deceleration stop during the home position return retry is set.	
	• The shift amount at the home position shift is set.	6.23.1 (3)
	• The operation speed which set the home position shift amount except "0" is set.	
	• The torque limit value with creep speed at the stopper type home position return is set.	6.23.1 (4)
	• When the home position return request signal is ON, it set whether a servo program can be executed or not.	6.23.1 (5)

(Note-1): When the "speed control 10×multiplier setting for degree axis" is set to "valid" in the fixed parameter, the setting range is "0.01 to 21474836.47[degree/min] ".

(1) Travel value after proximity dog ON

(a) The travel value after proximity dog ON is set to execute the count type home position return.

(b) After the proximity dog ON, the home position is the first zero-point after travel by the setting travel value.

(c) Set the travel value after proximity dog ON more than the deceleration distance from the home position return speed.

Example

The deceleration distance is calculated from the speed limit value, home position return speed, creep speed and deceleration time as shown below.

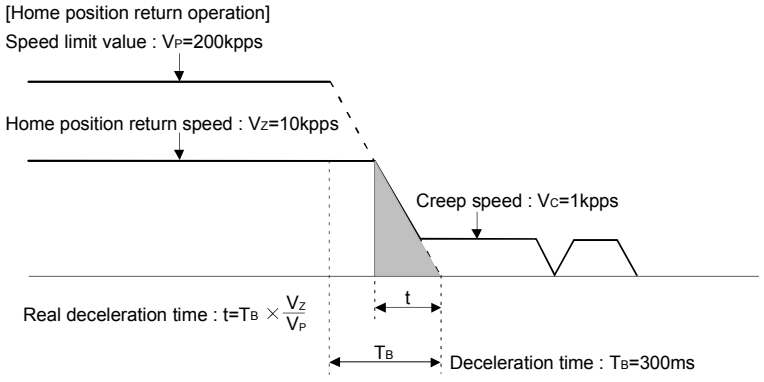

[Deceleration distance (shaded area under graph)]

$$= \frac{1}{2} \times \frac{V_Z}{1000} \times t$$

Converts in speed per millisecond

$$= \frac{V_Z}{2000} \times \frac{T_B \times V_Z}{V_P}$$

$$= \frac{10 \times 10^3}{2000} \times \frac{300 \times 10 \times 10^3}{200 \times 10^3}$$

= 75 . . . . . Set 75 or more

POINT

A home position return must be made after the servomotor has been rotated more than one revolution to pass the axis through the Z-phase (motor reference position signal).

For a proximity dog type or count type home position return, the distance between the point where the home position return program is started and the deceleration stop point before re-travel must be such that the servomotor is rotated more than one revolution to pass the axis through the Z-phase.

When a data set type home position return is made in an ABS (absolute position) system, the servomotor must also have been rotated more than one revolution by JOG operation or the like to pass the axis through the Z-phase.

(Note) : When "1 : No servomotor Z-phase pass after power ON" is selected in the "function selection C-4" of servo parameter (expansion setting parameter), even if it does not pass zero point, the home position return can be executed and restrictions are lost.

(2) Home position return retry function/dwell time at the home position return retry

(a) Valid/invalid of home position return retry is set.

(b) When the valid of home position return retry function is set, the time to stop at return of travel direction is set with dwell time at the home position return retry.

(c) Operation for the proximity dog type home position return by setting "valid" for home position return retry function is shown below.

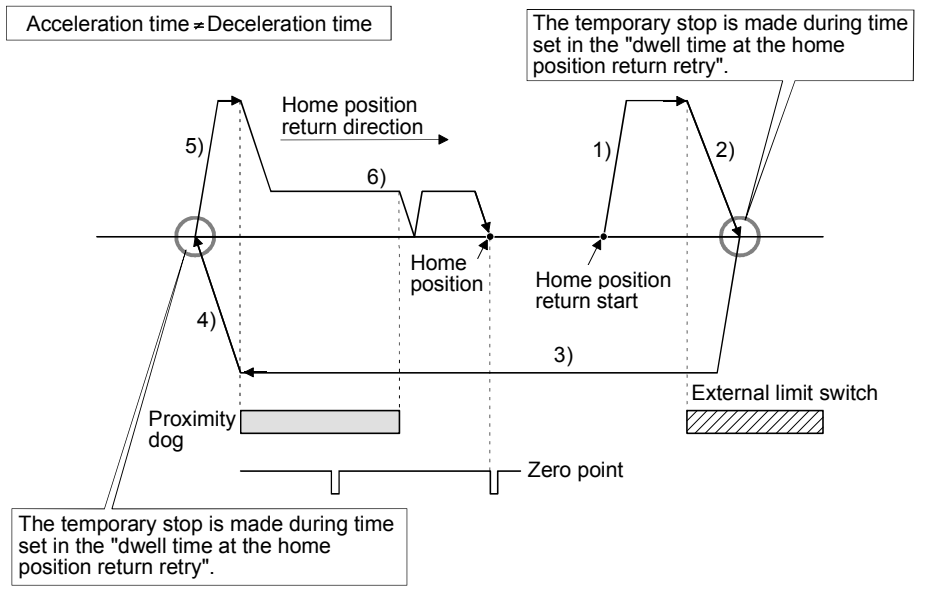

Fig. 6.31 Operation for home position return retry function

(d) Possible/not possible of home position return retry function by the home position return method is shown below.

Home position return methods	Possible/not possible of home position return retry function
Proximity dog type	○
Count type	○
Data set type	×
Dog cradle type	○
Stopper type	×
Limit switch combined type	×

○ : Possible, × : Not possible

(3) Home position shift amount/speed set at the home position shift

(a) The shift (travel) amount from position stopped by home position return is set.

(b) If the home position shift amount is positive value, it shifts from detected zero point signal to address increase direction. If it is negative value, it shifts from detected zero point signal to address decrease direction.

(c) Operation speed which set the home position shift amount except "0" is set in the speed set at the home position shift. Select one of the "home position return speed" or "creep speed".

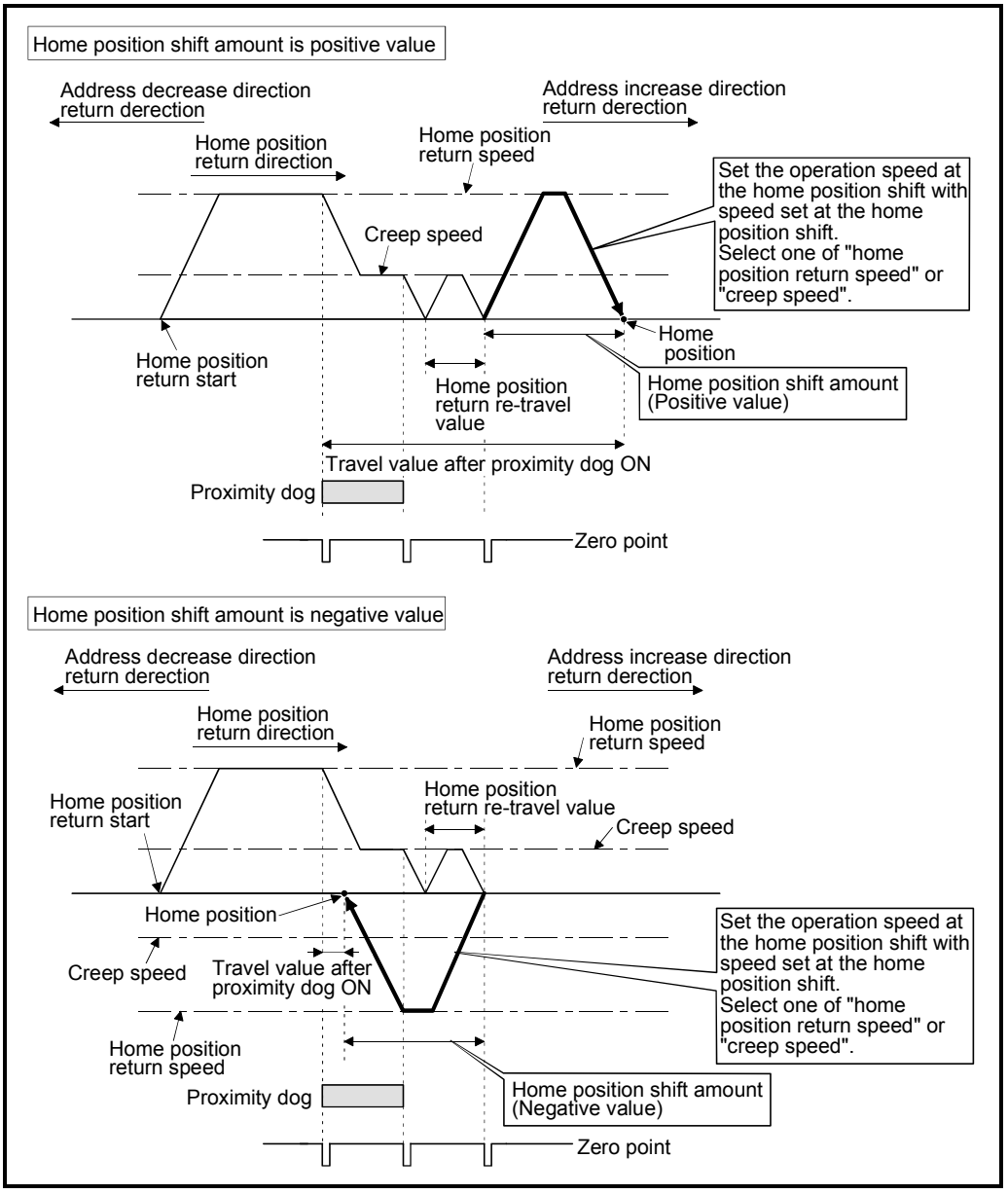

Fig. 6.32 Home position shift amount/speed set at the home position shift

(d) Valid/invalid of the setting value for home position shift amount by the home position return method is shown below.

Home position return methods	Valid/invalid of home position shift amount
Proximity dog type	○
Count type	○
Data set type	×
Dog cradle type	○
Stopper type	×
Limit switch combined type	○

○ : Valid, × : Invalid

POINT

(1) Home position shift function is used to rectify a home position stopped by the home position return. When there are physical restrictions in the home position by the relation of a proximity dog installation position, the home position is rectified to the optimal position. Also, by using the home position shift function, it is not necessary to care the zero point for an installation of servomotor.

(2) After proximity dog ON, if the travel value including home position shift amount exceeds the range of "-2147483648 to 2147483647" [$\times 10^{-1}$μm, $\times 10^{-5}$inch, $\times 10^{-5}$degree, PLS], "travel value after proximity dog ON" of monitor register is not set correctly.

(4) Torque limit value at the creep speed

(a) Torque limit value at the creep speed (on press) is set in the case of using the pressed position as the home position by the home position return of stopper type 1, 2.

(b) Valid/invalid of the torque limit value at the creep speed by the home position return method is shown below.

Home position return methods	Valid/invalid of torque limit value at the creep speed
Proximity dog type	×
Count type	×
Data set type	×
Dog cradle type	×
Stopper type	○
Limit switch combined type	×

○ : Valid, × : Invalid

(5) Operation setting for incompletion of home position return

(a) Operation in selecting "0: Execute servo program"

1) Servo program can be executed even if the home position return request signal (M2409+20n) is ON.

(b) Operation in selecting "1: Not execute servo program"

1) Servo program cannot be executed if the home position return request signal (M2409+20n) is ON. However, the servo program can be executed even if the home position return request signal (M2409+20n) is ON in the case of only servo program of home position return instruction (ZERO).
2) At the time of servo program start, when "1: Not execute servo program" is selected in the operation setting for incompletion of home position return and the axis which the home position return request signal (M2409+20n) is ON exists also with one axis, a minor error [121] occurs and the servo program does not start.
3) JOG operation and manual pulse generator operation can be executed regardless of the home position return request signal (M2409+20n) ON/OFF.
4) Same operation is executed regardless of absolute position system or not. When "1: Not execute servo program" is selected in the case of not absolute position system, the home position return request signal (M2409+20n) turns ON at power supply ON or reset of Motion CPU and power supply ON of servo amplifier. Therefore, it must be executed home position return before a servo program start.
5) Same operation is executed in also TEST mode.
6) This setting is valid in the real mode only. Servo program can be executed for a virtual axis connected to the output axis which the home position return request signal (M2409+20n) is ON.

(6) Indirect setting of home position return data

A part of home position return data can be executed the indirect setting by the word devices (D, W, #) of Motion CPU.

(a) Data devices for indirect setting

There are data registers (D), link registers (W) and Motion registers (#) as data devices for indirect setting. (Word devices except data registers, link registers and Motion registers cannot be used.) Usable devices are shown below. (Set the number of words for 2 words as even number.)

Word devices	Usable devices
D	800 to 8191
W	0 to 1FFF
#	0 to 7999

(b) Input of home position return

In the indirect setting by the word devices, the specified word device data are read at servo program execution by Motion CPU.

Set data to devices for indirect setting and then execute the start request of servo program at home position return.

POINT

(1) Indirect setting of axis cannot be executed using word devices in the servo program.

(2) Take an interlock with start accept flag (M2001 to M2032) not to change until the device data specified for indirect setting.

If the device data is changed before starting accept, it may not execute the home position return at the normal value.

(7) Setting items for home position return data

Items		Home position return methods										
		Proximity dog type 1	Proximity dog type 2	Count type 1	Count type 2	Count type 3	Data set type 1	Data set type 2	Dog cradle type	Stopper type 1	Stopper type 2	Limit switch combined type
Home position return data	Home position return direction	○	○	○	○	○	○	○	○	○	○	○
	Home position address	◎	◎	◎	◎	◎	◎	◎	◎	◎	◎	◎
	Home position return speed	◎	◎	◎	◎	◎	—	—	◎	◎	—	◎
	Creep speed	◎	◎	◎	◎	◎	—	—	◎	◎	◎	◎
	Travel value after proximity dog ON	—	—	◎	◎	◎	—	—	—	—	—	—
	Parameter block setting	○	○	○	○	○	—	—	○	○	○	○
	Home position return retry function	○	○	○	○	○	—	—	○	—	—	—
	Dwell time at the home position return retry	◎	◎	◎	◎	◎	—	—	◎	—	—	—
	Home position shift amount	◎	◎	◎	◎	◎	—	—	◎	—	—	◎
	Speed set at the home position shift	○	○	○	○	○	—	—	○	—	—	○
	Torque limit value at the creep speed	—	—	—	—	—	—	—	—	◎	◎	—
	Operation setting for incompletion of home position return	○	○	○	○	○	○	○	○	○	○	○
Parameter blocks	Interpolation control unit	—	—	—	—	—	—	—	—	—	—	—
	Speed limit value	—	—	—	—	—	—	—	—	—	—	—
	Acceleration time	○	○	○	○	○	—	—	○	○	○	○
	Deceleration time	○	○	○	○	○	—	—	○	○	○	○
	Rapid stop deceleration time	○	○	○	○	○	—	—	○	○	○	○
	S-curve ratio	○	○	○	○	○	—	—	○	○	○	○
	Torque limit value	○	○	○	○	○	—	—	○	○	○	○
	Deceleration processing at the stop time	○	○	○	○	○	—	—	○	○	○	○
	Allowable error range for circular interpolation	—	—	—	—	—	—	—	—	—	—	—

◎: Must be set (Indirect setting)
○: Must be set
—: Must be not set

6.23.2 Home position return by the proximity dog type 1

(1) Proximity dog type 1

Zero point position after proximity dog ON to OFF is home position in this method.

When it does not pass (zero pass signal: M2406+20n OFF) the zero point from home position return start to deceleration stop by proximity dog ON to OFF, an error will occur and home position return is not executed. However, when "1 : Not need to pass motor Z phase after the power supply is switched on" is selected in the "function selection C-4" of servo parameter (expansion setting parameter), if it does not pass zero point from home position return start to deceleration stop by proximity dog ON to OFF, the home position return can be executed.

(2) Home position return by the proximity dog type 1

Operation of home position return by proximity dog type 1 for passing (zero pass signal: M2406+20n ON) the zero point from home position return start to deceleration stop by proximity dog ON to OFF is shown below.

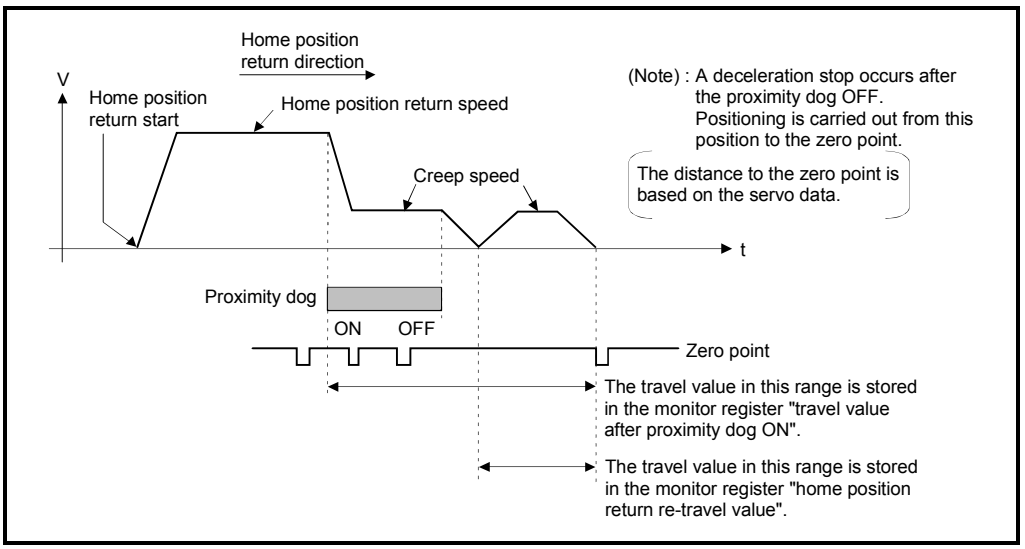

Fig. 6.33 Home position return operation by the proximity dog type 1

(3) Home position return execution

Home position return by the proximity dog type 1 is executed using the servo program in Section 6.23.16.

(4) Cautions

(a) Keep the proximity dog ON during deceleration from the home position return speed to the creep speed.
If the proximity dog turns OFF before deceleration to the creep speed, a deceleration stop is made and the next zero point is set as the home position.

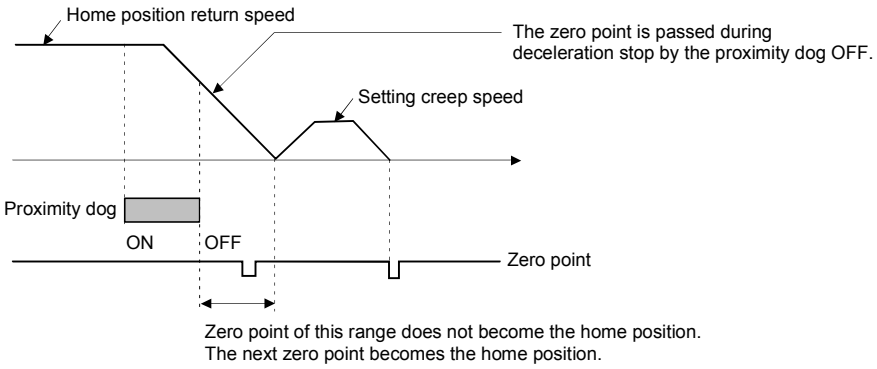

(b) The position executed deceleration stop by the proximity dog OFF is near zero point, a home position discrepancy equivalent to one revolution of the servomotor may occur. Adjust the position of proximity dog OFF, such that the home position return re-travel value becomes half the travel value for one revolution of the servomotor.

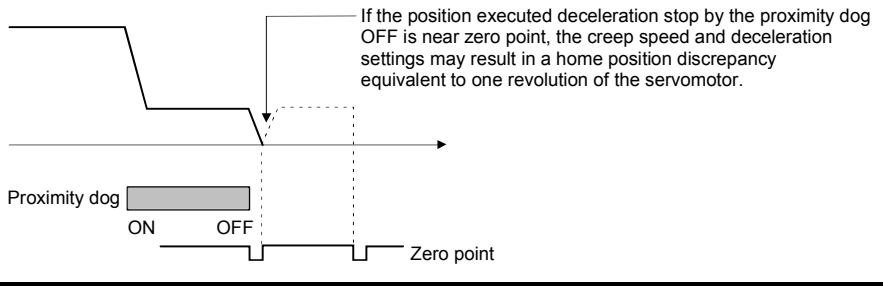

POINT

When the home position return retry function is not set in the following cases, execute the home position return, after return the axis once to position before the proximity dog ON by the JOG operation, etc.
Home position return cannot be executed without returning to position before the proximity dog ON.
(1) Home position return with a position after the proximity dog ON to OFF.
(2) When the power supply turned OFF to ON after home position return end.

(c) When it does not pass (zero pass signal: M2406+20n ON) the zero point from home position return start to deceleration stop by proximity dog ON to OFF, a minor error "ZCT not set" (error code: 120) will occur, a deceleration stop is made and home position return does not end normally. When a distance between home position return start position and home position is near and a zero point is not passed, select the proximity dog type 2.

(d) If home position return is executed in the proximity dog ON, a major error "proximity dog signal is turning ON at the home position return start" (error code: 1003) will occur, the home position return is not executed. Use the proximity dog type 2 in this case.

(e) When home position return retry function is not set, if home position return is executed again after home position return end, a minor error "home position return completion signal is turning ON at the proximity dog type home position return start" (error code: 115) will occur, the home position return is not executed.

(f) If in-position signal (M2402+20n) does not turn ON, home position return is not ended.

6.23.3 Home position return by the proximity dog type 2

(1) Proximity dog type 2

Zero point position after proximity dog ON to OFF is home position in this method.

When it passed (zero pass signal: M2406+20n ON) the zero point from home position return start to deceleration stop by proximity dog ON to OFF, operation for "proximity dog type 2" is the same as "proximity dog type 1". (Refer to Section 6.23.2)

When it does not pass (zero pass signal: M2406+20n OFF) the zero point from home position return start to deceleration stop by proximity dog ON to OFF, it moves to home position return direction after the servomotor is rotated one revolution to reverse direction and it passed the zero point, and the first zero point position is set as home position after proximity dog ON to OFF.

(2) Home position return by the proximity dog type 2

Operation of home position return by proximity dog type 2 for not passing the zero point from home position return start to deceleration stop by proximity dog ON to OFF is shown below.

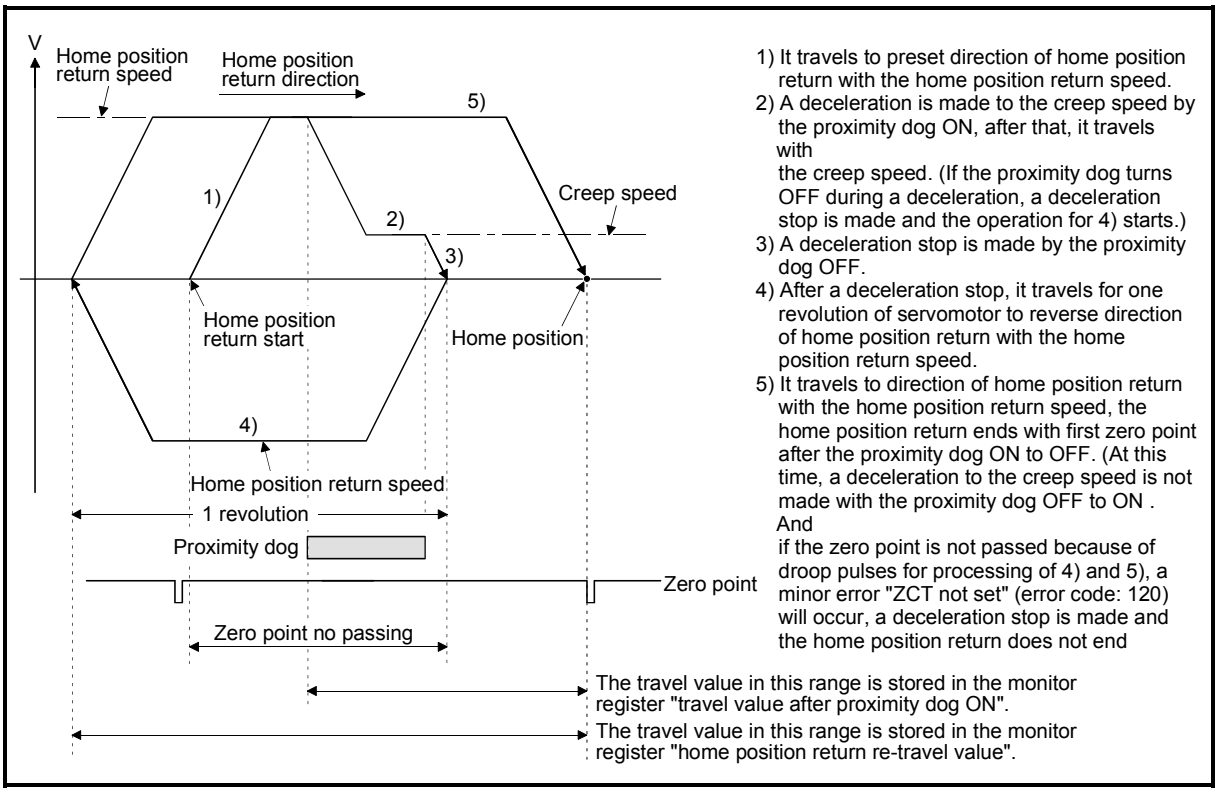

Fig. 6.34 Home position return operation by the proximity dog type 2 (zero point no passing)

(3) Home position return execution

Home position return by the proximity dog type 2 is executed using the servo program in Section 6.23.16.

(4) Cautions

(a) A system which the servomotor can rotate one time or more is required.

(b) When a servomotor stops with specified condition enables and rotates to reverse direction one time after proximity dog ON, make a system for which does not turn OFF the external upper/lower stroke limit.

(c) Keep the proximity dog ON during deceleration from the home position return speed to the creep speed.
If the proximity dog turns OFF before deceleration to the creep speed, a deceleration stop is made and the next zero point is set as the home position.

(d) If home position return is executed in the proximity dog ON, it starts with the creep speed.

(e) When home position return retry function is not set, if home position return is executed again after home position return completion, a minor error "home position return completion signal is turning ON at the proximity dog type home position return start" (error code: 115) will occur, the home position return is not executed.

(f) When "1 : Not need to pass motor Z phase after the power supply is switched on" is selected in the "function selection C-4" of servo parameter (expansion setting parameter), even if it does not pass zero point at the servo amplifier power ON, the zero pass signal (M2406+20n) turns ON. This operation is the same as proximity dog type 1.

(g) If in-position signal (M2402+20n) does not turn ON, home position return is not ended.

6.23.4 Home position return by the count type 1

(1) Count type 1

After the proximity dog ON, the zero point after the specified distance (travel value after proximity dog ON) is home position in this method. (If the proximity dog signal of servo amplifier is used, the count type 1 home position return cannot be executed.)

When the zero point is not passed (zero pass signal: M2406+20n OFF) until it travels the distance set in the "travel value after proximity dog ON" from home position return start, an error will occur and home position return is not executed. However, when "1 : Not need to pass motor Z phase after the power supply is switched on" is selected in the "function selection C-4" of servo parameter (expansion setting parameter), if the zero point is not passed until it travels the distance set in the "travel value after proximity dog ON" from home position return start, the home position return can be executed.

The travel value after proximity dog ON is set in the home position return data (Refer to Section 6.23.1).

(2) Home position return by the count type 1

Operation of home position return by count type 1 for passing the zero point during travel of specified distance set in the "travel value after proximity dog ON" from the home position return start is shown below.

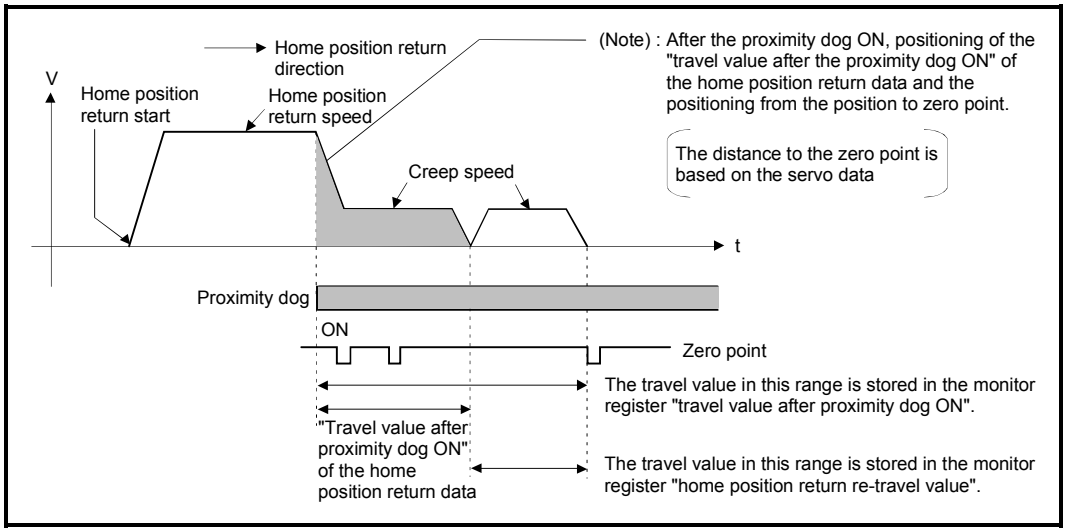

Fig. 6.35 Home position return operation by the count type 1

(3) Home position return execution

Home position return by the count type 1 is executed using the servo program in Section 6.23.16.

(4) Cautions

(a) Home position return and continuously start of home position return are also possible in the proximity dog ON in the count type 1.
When the home position return or continuously start of home position return are executed in the proximity dog ON, the home position return is executed after return the axis once to position of the proximity dog OFF.

(b) When the zero point is not passed (zero pass signal: M2406+20n ON) until it travels the distance set in the "travel value after proximity dog ON" from home position return start, a minor error "ZCT not set" (error code: 120) will occur, a deceleration stop is made and home position return does not end normally. When a distance between home position return start position and home position is near and a zero point is not passed, select the count type 3.

(c) When the "travel value after proximity dog ON" is less than the deceleration distance from "home position return speed" to "creep speed", a minor error "an overrun occurred because the setting travel value is less than the deceleration distance at the proximity dog signal input during home position return of count type" (error code: 209) will occur and deceleration stop is made.

(d) If in-position signal (M2402+20n) does not turn ON, home position return is not ended.

6.23.5 Home position return by the count type 2

(1) Count type 2

After the proximity dog ON, the position which traveled the specified distance (travel value after proximity dog ON) is home position in this method.
It is not related for zero point pass or not pass. (If the proximity dog signal of servo amplifier is used, the count type 2 home position return cannot be executed.)
A count type 2 is effective method when a zero point signal cannot be taken. (However, dispersions will occur to the stop position at the home position return compared with the count type 1.)
The travel value after proximity dog ON is set in the home position return data (Refer to Section 6.23.1).

(2) Home position return by the count type 2

Operation of home position return by count type 2 is shown below.

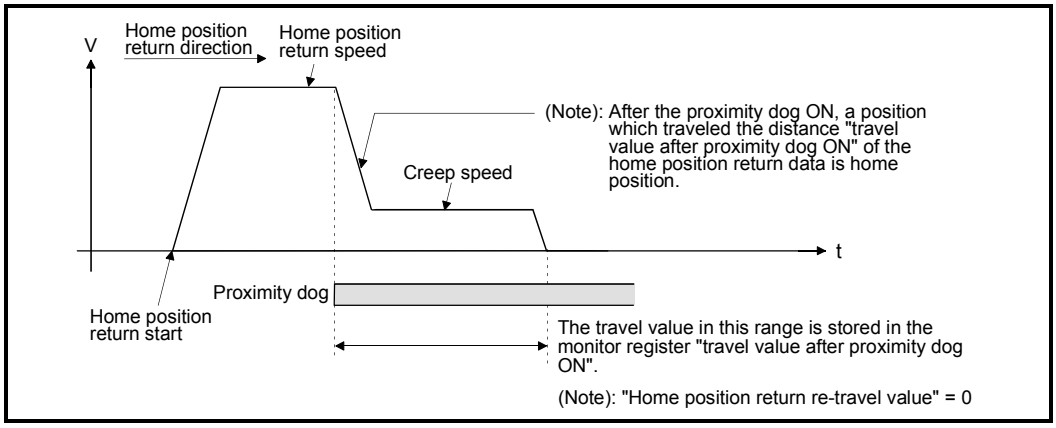

Fig. 6.36 Home position return operation by the count type 2

(3) Home position return execution

Home position return by the count type 2 is executed using the servo program in Section 6.23.16.

(4) Cautions

(a) Home position return and continuously start of home position return are also possible in the proximity dog ON in the count type 2.
When the home position return and continuously start of home position return are executed in the proximity dog ON, the home position return is executed after return the axis once to position of the proximity dog OFF.

(b) When the "travel value after proximity dog ON" is less than the deceleration distance from "home position return speed" to "creep speed", a minor error "an overrun occurred because the setting travel value is less than the deceleration distance at the proximity dog signal input during home position return of count type." (error code: 209) will occur and deceleration stop is made.

(c) Command position is the home position.

(d) If in-position signal (M2402+20n) does not turn ON, home position return is not ended.

6.23.6 Home position return by the count type 3

(1) Count type 3

After the proximity dog ON, the zero point after the specified distance (travel value after proximity dog ON) is home position in this method. (If the proximity dog signal of servo amplifier is used, the count type 3 home position return cannot be executed.)

When the zero point is passed (zero pass signal: M2406+20n ON) during travel of specified distance set in the “travel value after proximity dog ON” from the home position return start, home position return operation is the same as “count type 1”. (Refer to Section 6.23.4)

When a zero point is not passed (zero pass signal: M2406+20n OFF) during travel of specified distance set in the “travel value after proximity dog ON” from the home position return start, it rotates one time to reverse direction and passes the zero point, re-travels to home position return direction, and then the first zero point after the specified distance (travel value after proximity dog ON) after proximity dog ON is set as home position.

The travel value after proximity dog ON is set in the home position return data (Refer to Section 6.23.1).

(2) Home position return by the count type 3

Operation of home position return by count type 3 for not passing the zero point during travel of specified distance set in the “travel value after proximity dog ON” from the home position return start is shown below.

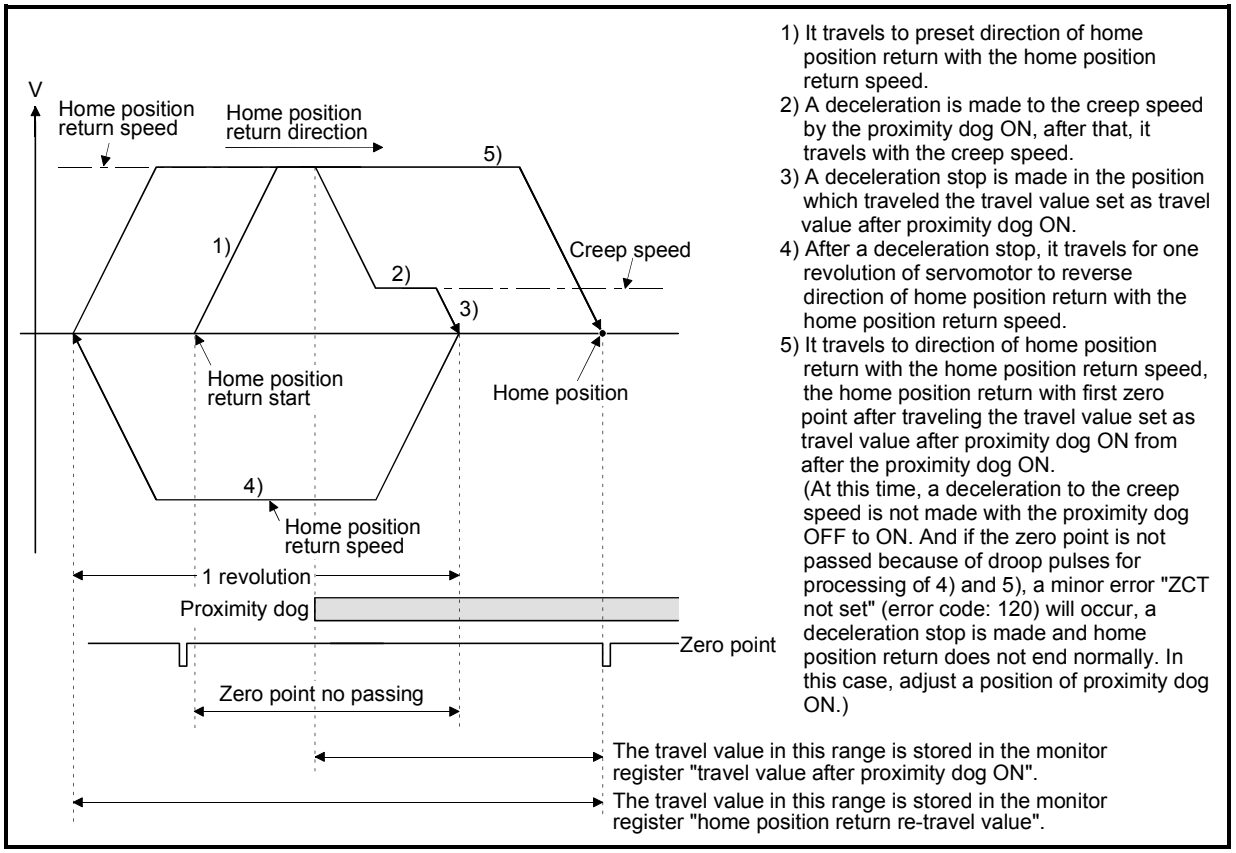

Fig. 6.37 Home position return operation by the count type 3 (zero point no passing)

(3) Home position return execution

Home position return by the count type 3 is executed using the servo program in Section 6.23.16.

(4) Cautions

(a) A system which the servomotor can rotate one time or more is required.

(b) After the proximity dog ON, when a servomotor rotates one time to reverse direction after stop with travel value set in the "travel value after proximity dog ON", make a system which does not turn OFF the external upper/lower stroke limit.

(c) Home position return and continuously start of home position return are also possible in the proximity dog ON in the count type 3.
When the home position return and continuously start of home position return are executed in the proximity dog ON, the home position return is executed after return the axis once to position of the proximity dog OFF.

(d) When the "travel value after proximity dog ON" is less than the deceleration distance from "home position return speed" to "creep speed", a minor error "an overrun occurred because the setting travel value is less than the deceleration distance at the proximity dog signal input during home position return of count type." (error code: 209) will occur and deceleration stop is made.

(e) When "1 : Not need to pass motor Z phase after the power supply is switched on" is selected in the "function selection C-4" of servo parameter (expansion setting parameter), even if it does not pass zero point at the servo amplifier power ON, the zero pass signal (M2406+20n) turns ON. This operation is the same as count type 1.

(f) If in-position signal (M2402+20n) does not turn ON, home position return is not ended.

6.23.7 Home position return by the data set type 1

(1) Data set type 1

The proximity dog is not used in this method for the absolute position system.

(2) Home position return by the data set type 1

Home position is the command position at the home position return operation.

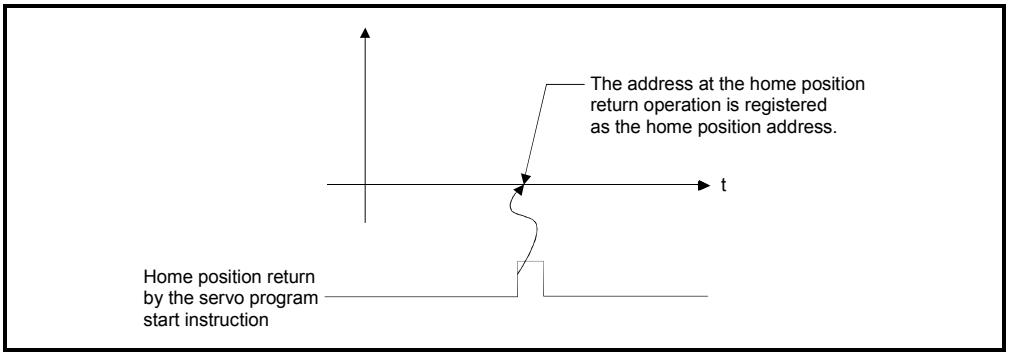

Fig. 6.38 Home position return operation by the date set type 1

(3) Home position return execution

Home position return by the data set type 1 is executed using the servo program in Section 6.23.16.

(4) Cautions

(a) A zero point must be passed (zero pass signal: M2406+20n ON) between turning ON the power supply and executing home position return.
If home position return is executed without passing a zero point once, "no zero point passed error" occurs. If "no zero point passed error" occurred, perform the home position return again, after reset the error and turn the servomotor at least one revolution by the JOG operation.
The zero point passing can be confirmed with the zero pass signal (M2406+20n). However, when "1 : Not need to pass motor Z phase after the power supply is switched on" is selected in the "function selection C-4" of servo parameter (expansion setting parameter), even if it does not pass zero point at the servo amplifier power ON, the home position return is possible because the zero pass signal (M2406+20n) turns ON.

(b) Home position return is started by the data set type 1 when the absolute position system does not support, it becomes same function as the current value change command.

(c) The home position return data required for the data set type 1 are the home position return direction and home position address.

(d) If in-position signal (M2402+20n) does not turn ON, home position return is not ended.

6.23.8 Home position return by the data set type 2

(1) Data set type 2

The proximity dog is not used in this method for the absolute position system.

(2) Home position return by the data set type 2

Home position is the real position of servomotor at the home position return operation.

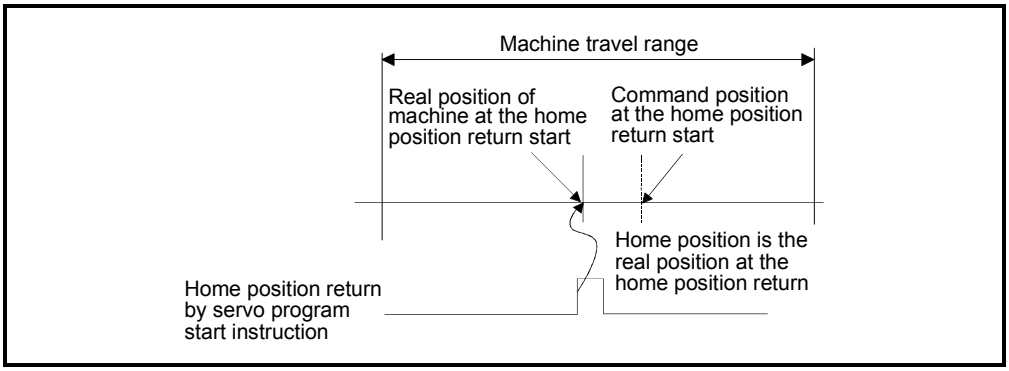

Fig. 6.39 Home position return operation by the date set type 2

(3) Home position return execution

Home position return by the data set type 2 is executed using the servo program in Section 6.23.16.

(4) Cautions

(a) A zero point must be passed (zero pass signal: M2406+20n ON) between turning on the power supply and executing home position return.
If home position return is executed without passing a zero point once, "no zero point passed error" occurs. If "no zero point passed error" occurred, perform the home position return again, after reset the error and turn the servomotor at least one revolution by the JOG operation.
The zero point passing can be confirmed with the zero pass signal (M2406+20n). However, when "1 : Not need to pass motor Z phase after the power supply is switched on" is selected in the "function selection C-4" of servo parameter (expansion setting parameter), even if it does not pass zero point at the servo amplifier power ON, the home position return is possible because the zero pass signal (M2406+20n) turns ON.

(b) The home position return data required for the data set type 2 are the home position return direction and home position address.

6.23.9 Home position return by the dog cradle type

(1) Dog cradle type

After deceleration stop by the proximity dog ON, if the zero point is passed after traveling to reverse direction and turning the proximity dog OFF, the deceleration stop is made. And it moves to direction of home position return again with creep speed and the first zero point after proximity dog ON is home position in this method.

(2) Home position return by the dog cradle type

Operation of home position return by the dog cradle type for setting the proximity dog in the home position return direction is shown below.

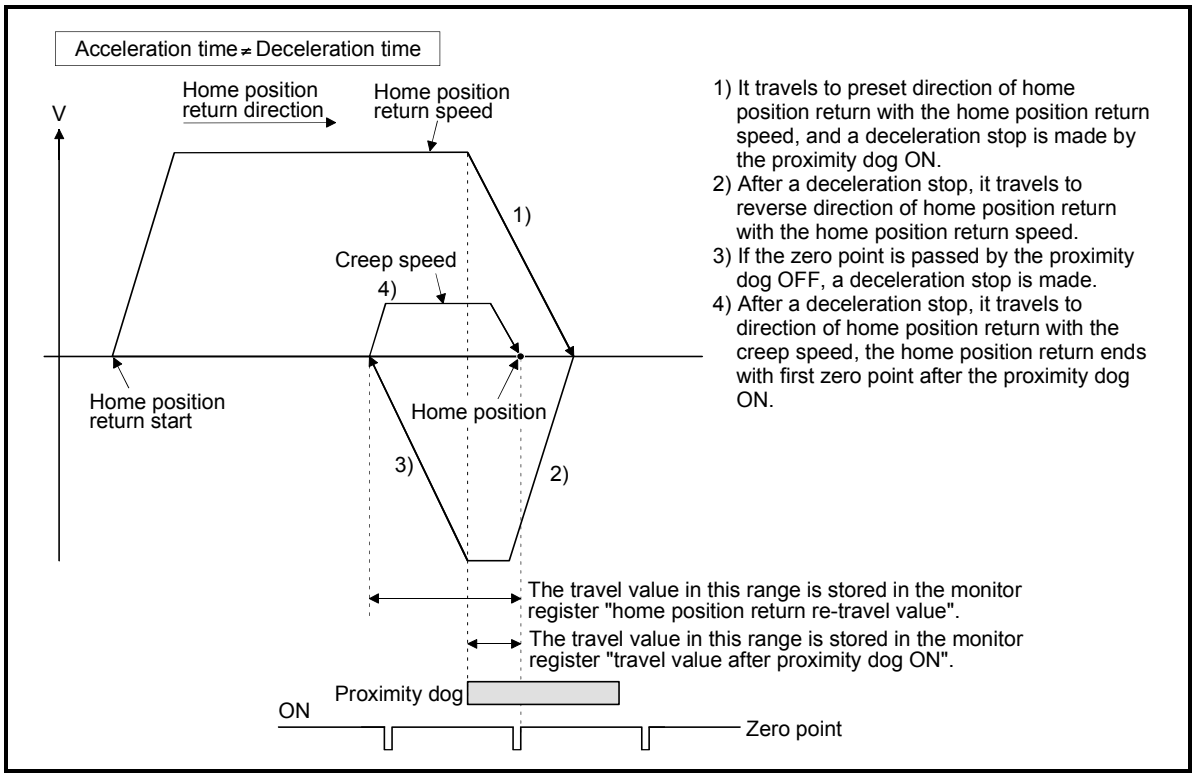

Fig. 6.40 Home position return operation by the dog cradle type

(3) Home position return execution

Home position return by the dog cradle type is executed using the servo program in Section 6.23.16.

(4) Cautions

(a) When home position return retry function is not set, if home position return is executed again after home position return end, a minor error "home position return completion signal is turning ON at the dog cradle type home position return start" (error code: 115) will occur, the home position return is not executed.

(b) If the home position return is executed in the proximity dog, it travels to reverse direction of home position return. If proximity dog turns OFF, a deceleration stop is made, it travels to direction of home position return again with the creep speed and the first zero point after proximity dog ON is home position.

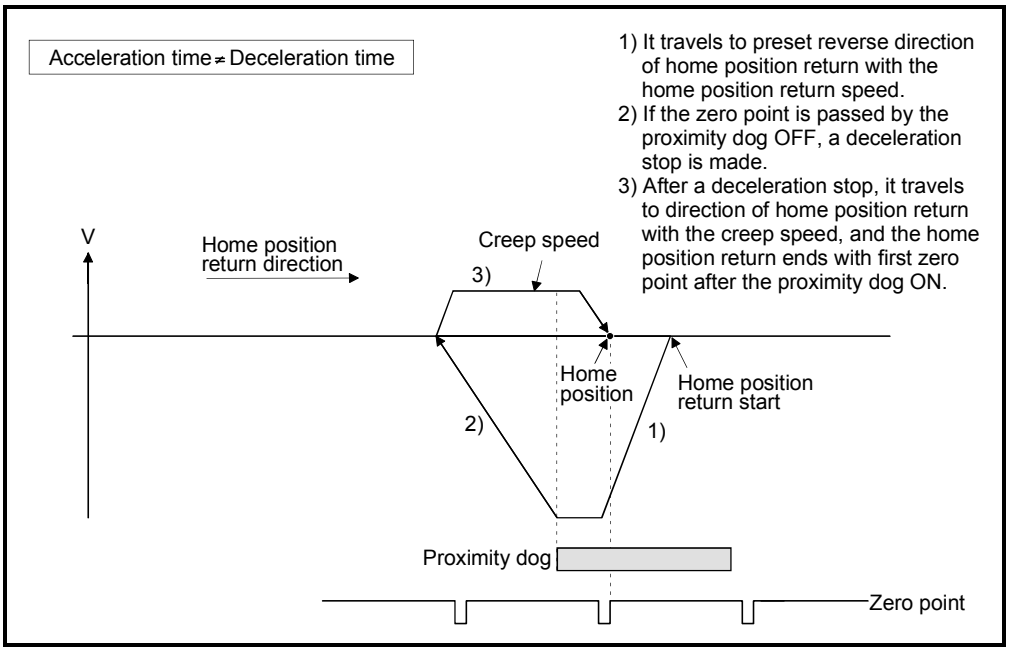

(c) When the proximity dog is set in the home position return direction, the proximity dog is turned OFF during travel to reverse direction of home position return, and the zero point is not passed, it continues to travel in the reverse direction of home position return with home position return speed until the zero point is passed. The zero point is passed again during deceleration by zero point pass, the home position becomes this side compared with the case to pass zero point at the time of the proximity dog OFF.

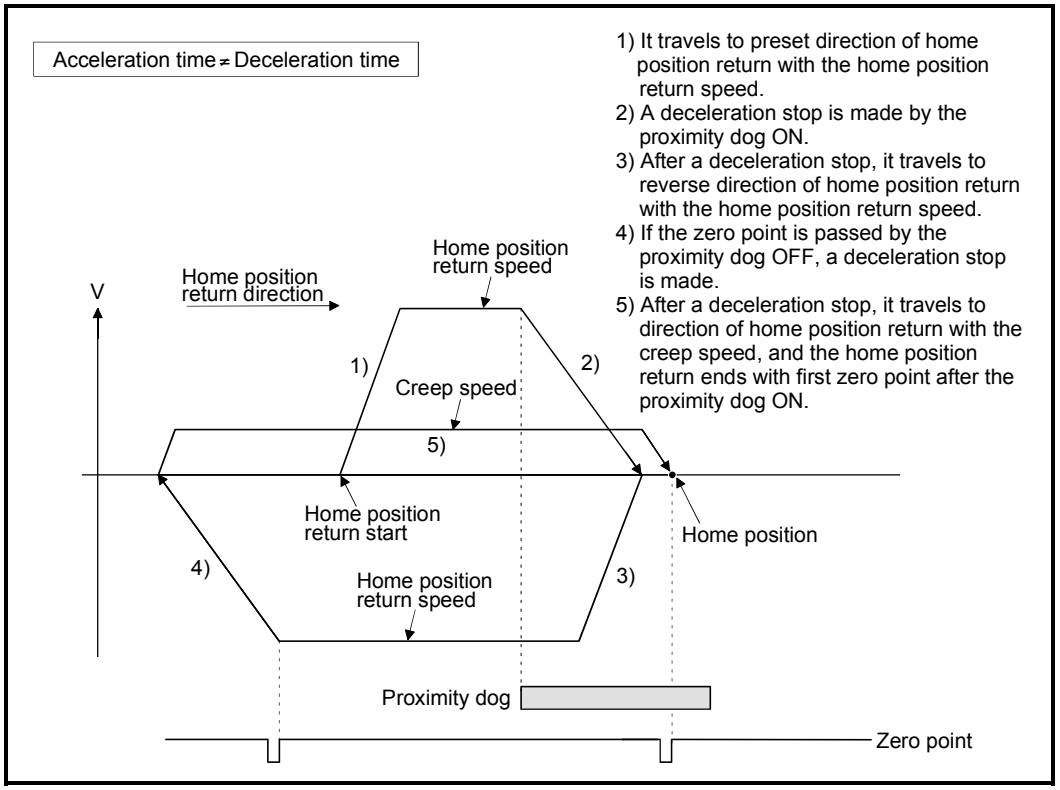

(d) When it starts in the proximity dog, the zero point is not passed at the time of the proximity dog is turned OFF during travel to reverse direction of home position return, it continues to travel with home position return speed until the zero point is passed. The zero point is passed again during deceleration by zero point pass, the home position becomes this side compared with the case to pass zero point at the time of the proximity dog OFF.

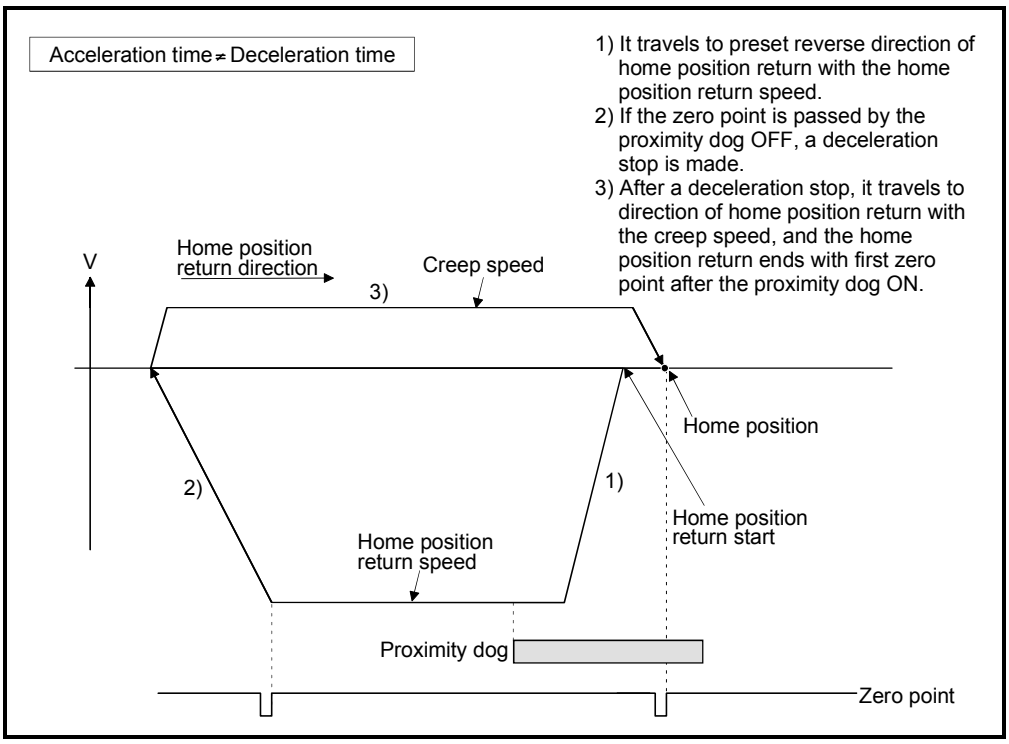

6.23.10 Home position return by the stopper type 1

(1) Stopper type 1

Position of stopper is home position in this method.
It travels to the direction set in the "home position return direction" with the "home position return speed", after a deceleration starts by proximity dog OFF to ON and it presses against the stopper and makes to stop with the torque limit value set in the "torque limit value at the creep speed" and "creep speed" of home position return data. Real position of servomotor at the time of detection for turning the torque limiting signal OFF to ON is home position.
Torque limit value after reaching creep speed is set in the "torque limit value at the creep speed" of home position return data.

(2) Home position return by the stopper type 1

Operation of home position return by the stopper type 1 is shown below.

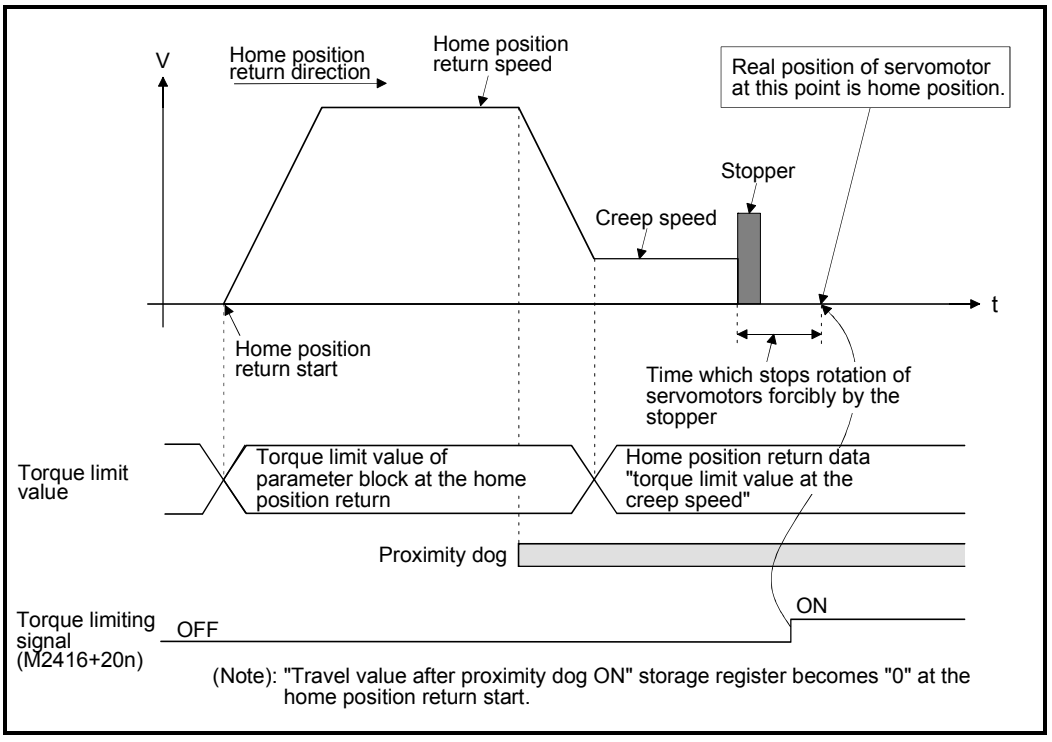

Fig. 6.41 Home position return operation by the stopper type 1

(3) Home position return execution

Home position return by the stopper type 1 is executed using the servo program in Section 6.23.16.

(4) Cautions

(a) A zero point does not must be passed (zero pass signal: M2406+20n ON) between turning on the power supply and executing home position return.

(b) Home position return retry function cannot be used in the stopper type 1.

(c) Set the torque limit value after reaching the creep speed for system.
When the torque limit value is too large, servomotors or machines may be damaged after pressing the stopper. Also, when the torque limit value is too small, it becomes the torque limiting before pressing the stopper and ends the home position return.

(d) If the home position return is executed again after home position return completion, a minor error "home position return completion signal is turning ON at the stopper type home position return start" (error code: 115) will occur, the home position return is not executed.

(e) Home position return is started during the proximity dog ON, it is started from the "creep speed".

6.23.11 Home position return by the stopper type 2

(1) Stopper type 2

Position of stopper is home position in this method.
It travels the direction set in the "home position return direction" with the "creep speed", and it presses against the stopper and makes to stop with the "creep speed". (The torque limit value is valid set in the "torque limit value at the creep speed" of the home position return data from the home position return start.)
Real position of servomotor at the time of detection for turning the torque limiting signal OFF to ON is home position.
Torque limit value after reaching creep speed is set in the "torque limit value at the creep speed" of home position return data.

(2) Home position return by the stopper type 2

Operation of home position return by the stopper type 2 is shown below.

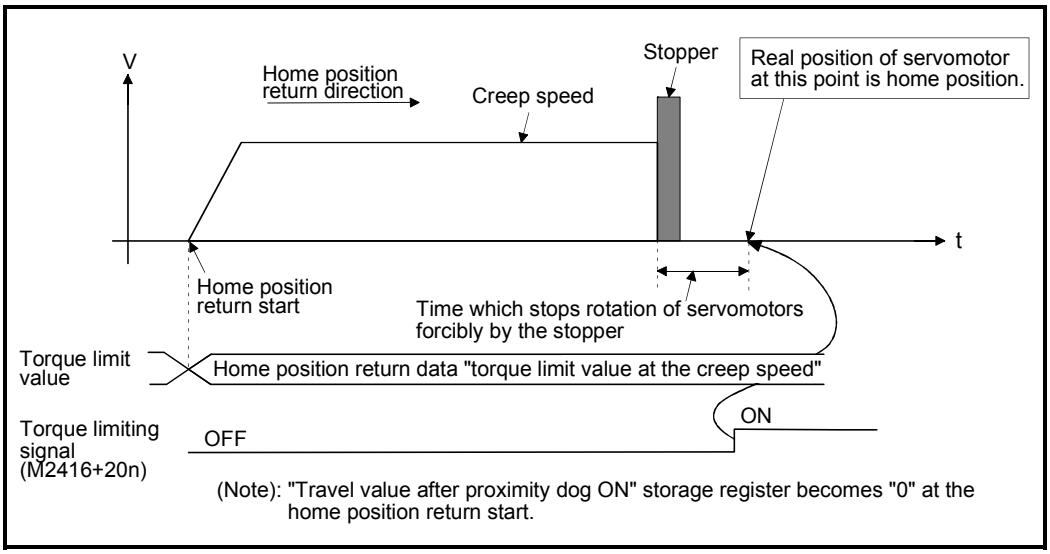

Fig. 6.42 Home position return operation by the stopper type 2

(3) Home position return execution

Home position return by the stopper type 2 is executed using the servo program in Section 6.23.16.

(4) Cautions

(a) A zero point does not must be passed (zero pass signal: M2406+20n ON) between turning on the power supply and executing home position return.

(b) Home position return retry function cannot be used in the stopper type 2.

(c) Set the torque limit value at the reaching creep speed for system.
When the torque limit value is too large, servomotors or machines may be damaged after pressing the stopper. Also, when the torque limit value is too small, it becomes the torque limiting before pressing the stopper and ends the home position return.

(d) If the home position return is executed again after home position return completion, a minor error “home position return completion signal is turning ON at the stopper type home position return start” (error code: 115) will occur, the home position return is not executed.

6.23.12 Home position return by the limit switch combined type

(1) Limit switch combined type

The proximity dog is not used in this method. Home position return can be executed by using the external upper/lower limit switch.
When the home position return is started, it travels to direction of home position return with "home position return speed". Deceleration is made by turning the limit switch of home position return direction ON to OFF, it travels to reverse direction of home position return with creep speed, and the zero point just before limit switch is home position.

(2) Home position return by the limit switch combined type

Operation of home position return by limit switch combined type for setting the limit switch in the home position return direction is shown below.

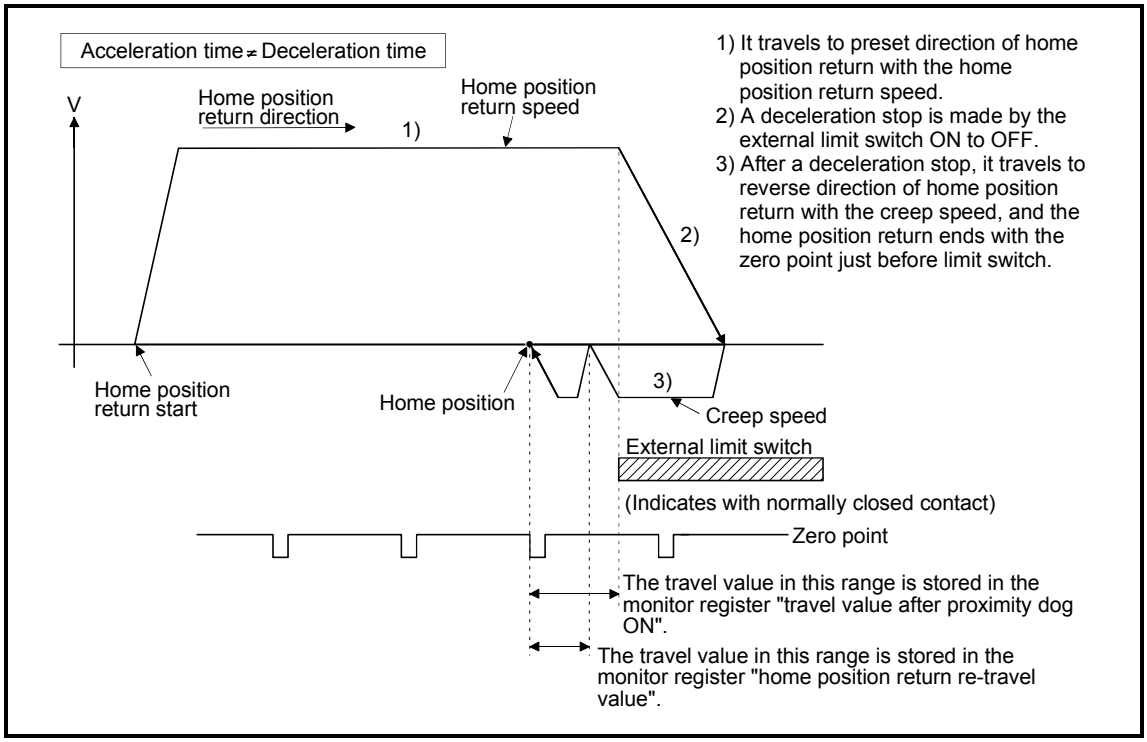

Fig. 6.43 Home position return operation by the limit switch combined type

(3) Home position return execution

Home position return by the limit switch combined type is executed using the servo program in Section 6.23.16.

(4) Cautions

(a) For the axis which executes the home position return by the limit switch combined type, if the external input signal has not set in the system settings, a minor error "the positioning control which use the external input signal was executed for the axis which has not set the external input signal in the system settings" (error code: 142) will occur and home position return is not executed.

(b) When the limit switch reverse to home position return direction is turned ON to OFF, deceleration stop is made, home position return is not completed and a major error "external limit switch detection error" (error code : 1101, 1102) will occur.

(c) Home position return retry function cannot be used in the limit switch combined type.

(d) If the home position return is executed with the limit switch OFF, it is started to reverse direction of home position return with creep speed.

(e) When it does not pass (zero pass signal: M2406+20n ON) the zero point from home position return start to deceleration stop by limit switch OFF, a minor error "ZCT not set" (error code: 120) will occur, a deceleration stop is made and home position return does not end normally. However, when "1 : Not need to pass motor Z phase after the power supply is switched on" is selected in the "function selection C-4" of servo parameter (expansion setting parameter), if the zero point is not passed until from home position return start to deceleration stop by limit switch OFF, the home position return can be executed.

(f) Deceleration stop is executed after the limit switch OFF. Set the limit switch in expectation of deceleration distance.

(g) If the in-position signal (M2402+20n) is turned ON, home position return is not ended.

(h) When the width is in a zero point, the home position differs from the home position return by the proximity dog type 1, proximity dog type 2, count type 1, count type 3 and dog cradle type.

6.23.13 Home position return retry function

When a work has been exceeded home position during positioning control, etc., even if it executes the home position return, depending on the position of work, a work may not travel to home position direction. In this case, a work is normally travelled before the proximity dog by the JOG operation, etc, and the home position return is started again. However, by using the home position return retry function, even if a work is where, the home position return can be executed.
Refer to Section 6.23.1(7) for home position return method by using the home position return retry function.

[Data Setting]

When the "home position return retry function" is used, set the following "home position return data" using a peripheral devices.
Set the "dwell time at the home position return retry" as required.
Set the parameters for every axis.

Table 6.4 Home position return data

Items	Setting details	Setting value	Initial value
Home position return retry function	0 : Invalid (Do not execute the home position return retry by limit switch.) 1 : Valid (Execute the home position return retry by limit switch.)	0, 1	0
Dwell time at the home position return retry	The stop time at the deceleration stop during the home position return retry is set	0 to 5000 [ms]	0

[Control details]

Operation for the home position return retry function is shown below.

(1) Home position return retry operation setting a work within the range of external limit switch

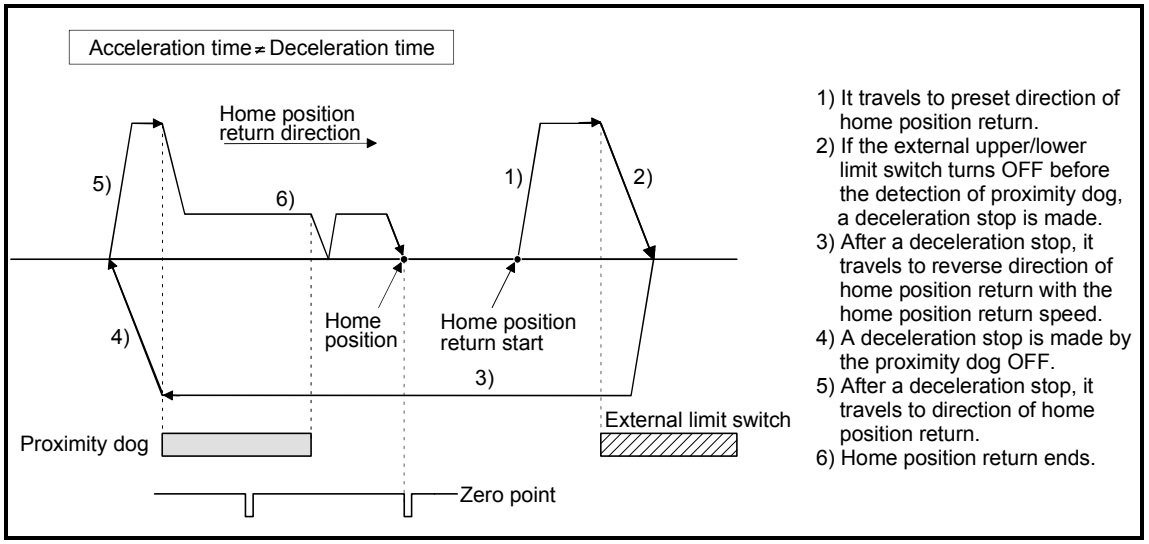

Fig. 6.44 Operation for home position return retry (proximity dog type)

(2) Home position return retry operation setting a work outside the range of external limit switch

(a) When the direction of "work → home position" and home position return is same, normal home position return is operated.

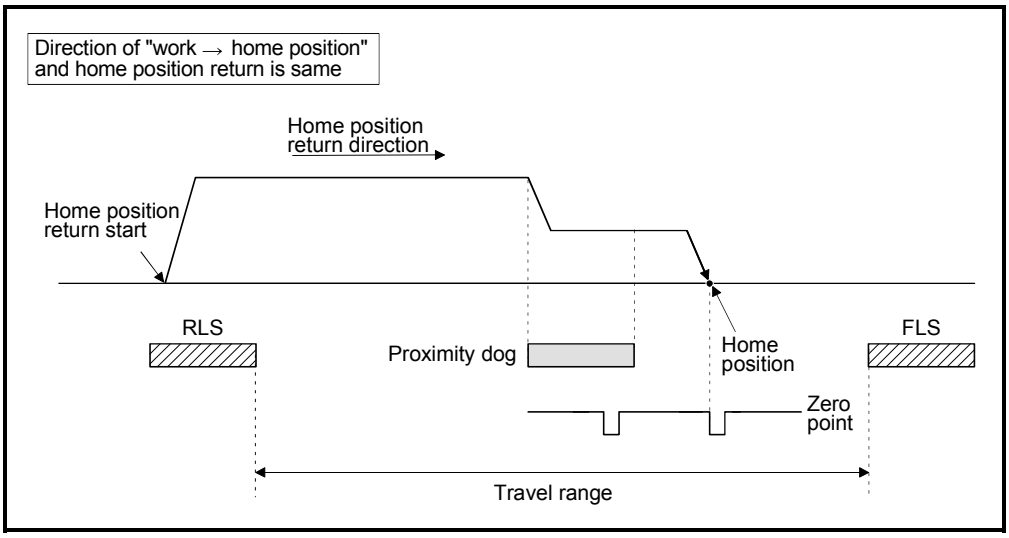

(b) When the direction of "work → home position" and home position return is reverse, deceleration stop is made with the proximity dog OFF and home position return is operated to preset direction of home position return.

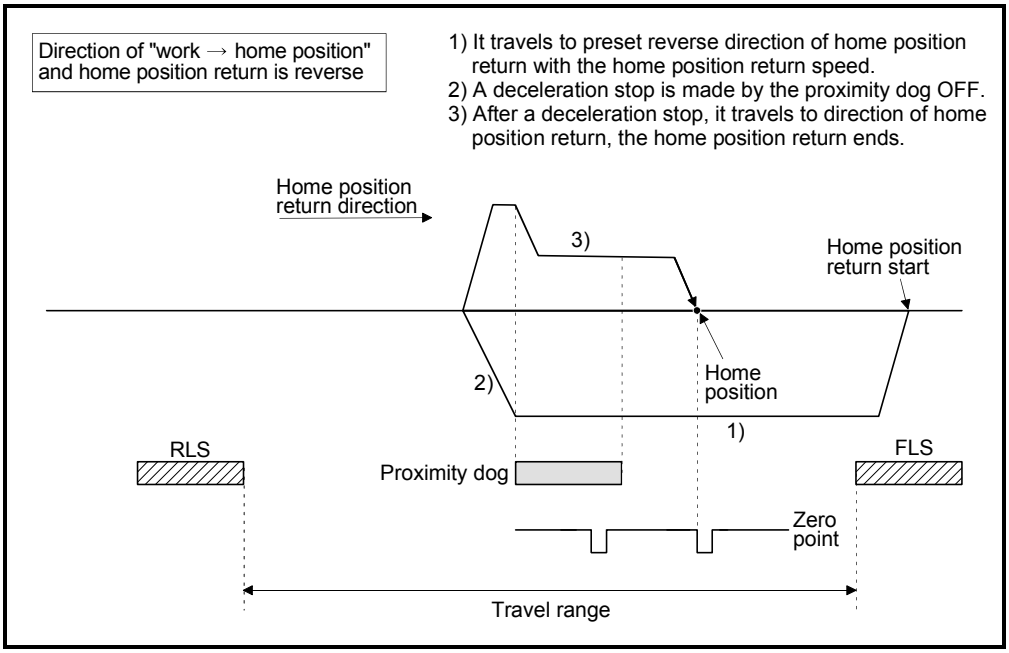

(3) Dwell time setting at the home position return retry

Reverse operation by detection of the external upper/lower limit switch and dwell time function at the home position return start after stop by proximity dog OFF are possible with the dwell time at the home position return retry in the home position return retry function.

Dwell time at the home position return retry becomes valid at the time of deceleration stop of the following 2) and 4). (Dwell time operates with the same value.)

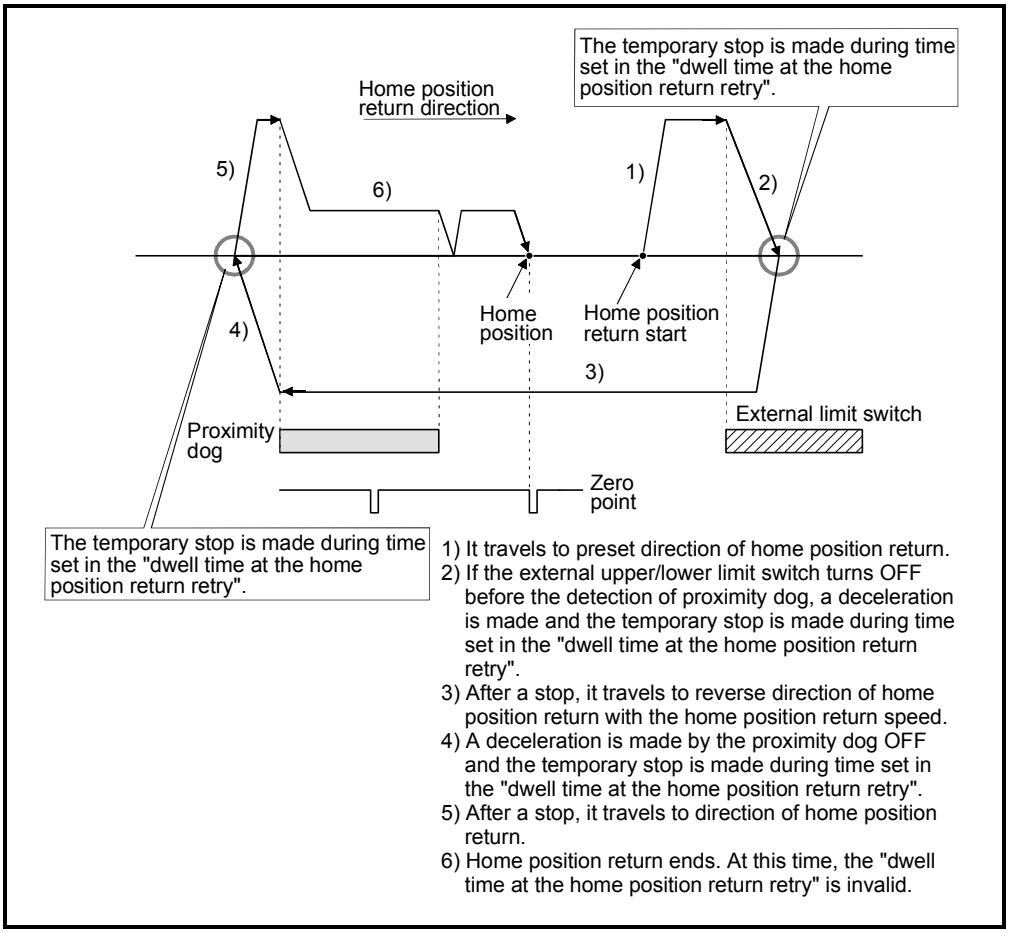

Fig. 6.45 Dwell time setting at the home position return retry

[Cautions]

(1) Possible/not possible of home position return retry function by the home position return method is shown below.

Home position return methods	Possible/not possible of home position return retry function
Proximity dog type	○
Count type	○
Data set type	×
Dog cradle type	○
Stopper type	×
Limit switch combined type	×

○ : Possible, × : Not possible

(2) Make a system for which does not execute the servo amplifier power off or servo OFF by the external upper/lower limit switch. Home position return retry cannot be executed only in the state of servo ON.

(3) Deceleration is made by detection of the external limit switch and travel to reverse direction of home position return is started. In this case, a major error “external limit switch detection error” (error codes: 1001, 1002, 1101, 1102) will not occur.

⚠ CAUTION
● Be sure to set the external limit switch (FLS, RLS) in the upper/lower position of machines. If the home position return retry function is used without external limit switch, servomotors continue rotating.

6.23.14 Home position shift function

Normally, when the machine home position return is executed, a position of home position is set by using the proximity dog or zero point signal. However, by using the home position shift function, the position to which only the specified travel value was travelled from the position which detected the zero point signal can be regarded as home position.
Refer to Section 6.23.1(7) for home position return method by using the home position shift function.

[Data Setting]

Set the following "home position return data" using a peripheral devices to use the "home position shift function".
Set the parameters for every axis.

Table 6.5 Home position return data

Items	Setting details	Setting value	Initial value
Home position shift amount	The shift amount at the home position shift is set.	-2147483648 to 2147483647 [$\times 10^{-1}$ μm, $\times 10^{-5}$ inch, 10^{-5} degree, PLS]	0
Speed set at the home position shift	The speed at the home position shift is set.	0 : Home position return speed 1: Creep speed	0

[Control details]

(1) Home position shift operation

Operation for the home position shift function is shown below.

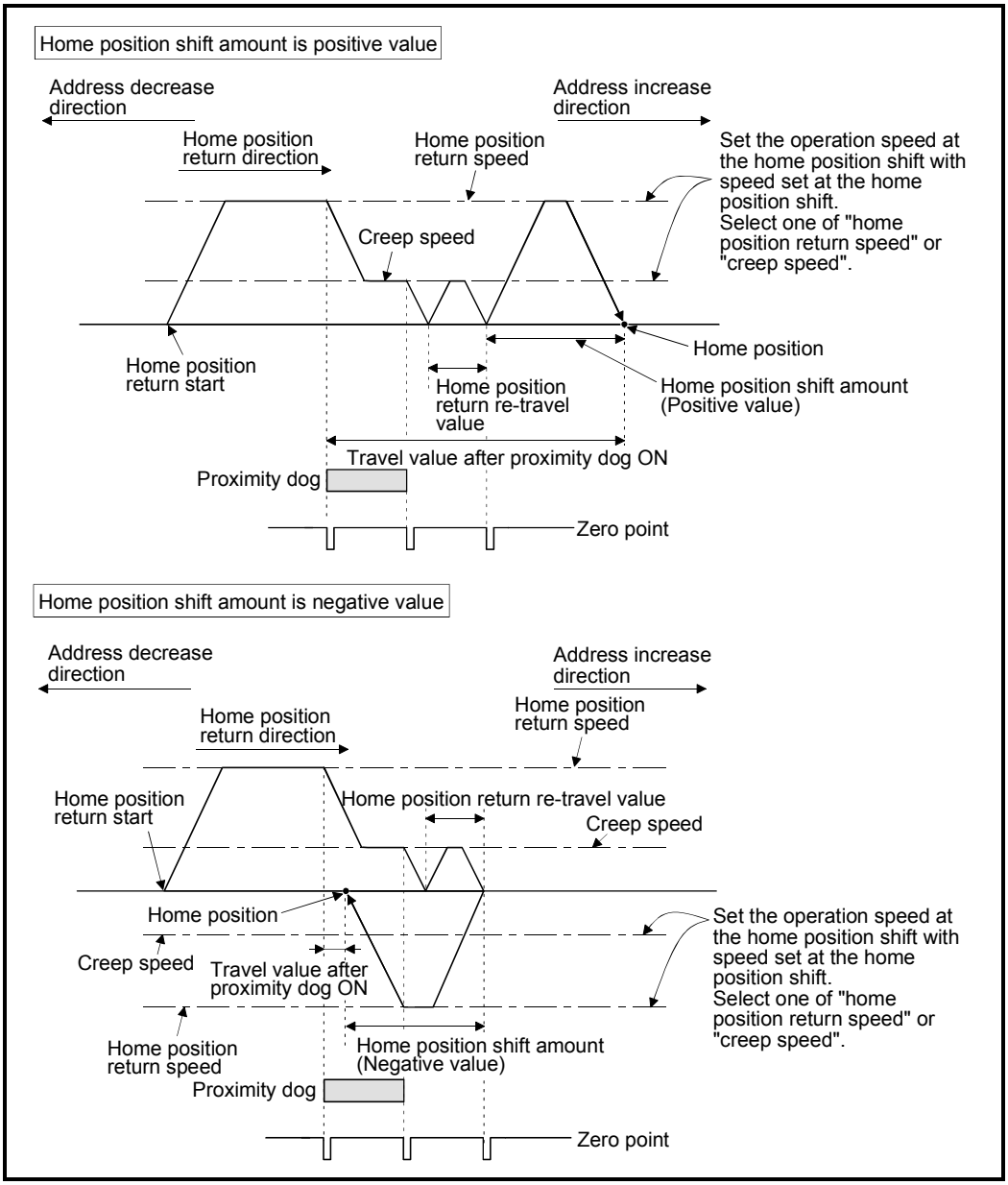

Fig. 6.46 Operation for home position shift

(2) Setting range of home position shift amount

Set the home position shift amount within the range of from the detected zero signal to external upper/lower limit switch (FLS/RLS). If the range of external upper/lower limit switch is exceeded, a major error "external limit switch detection error" (error codes: 1102, 1103) will occur at that time and the home position return is not ended.

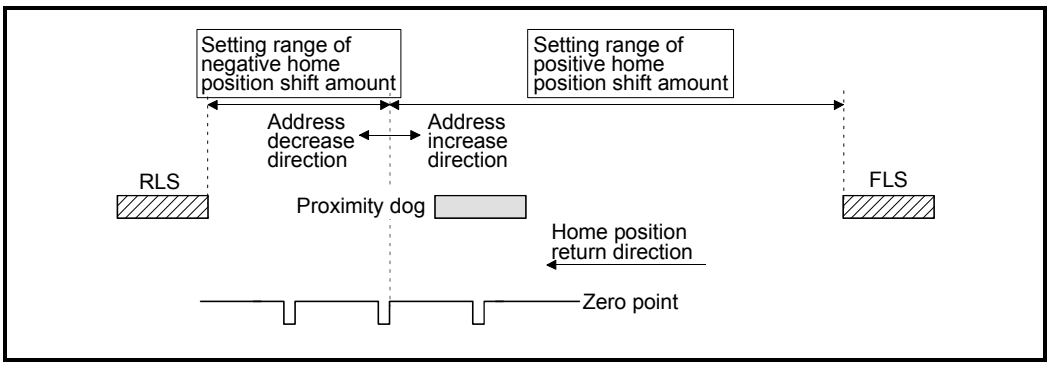

Fig. 6.47 Setting range of home position shift amount

(3) Travel speed at the home position shift

When the home position shift function is used, set the travel speed at the home position shift as the speed set at the home position shift. Either the home position return speed or creep speed is selected as the travel speed at the home position shift.

The travel speed at the home position shift for the home position return by proximity dog type is shown below.

(a) Home position shift operation with the "home position return speed"

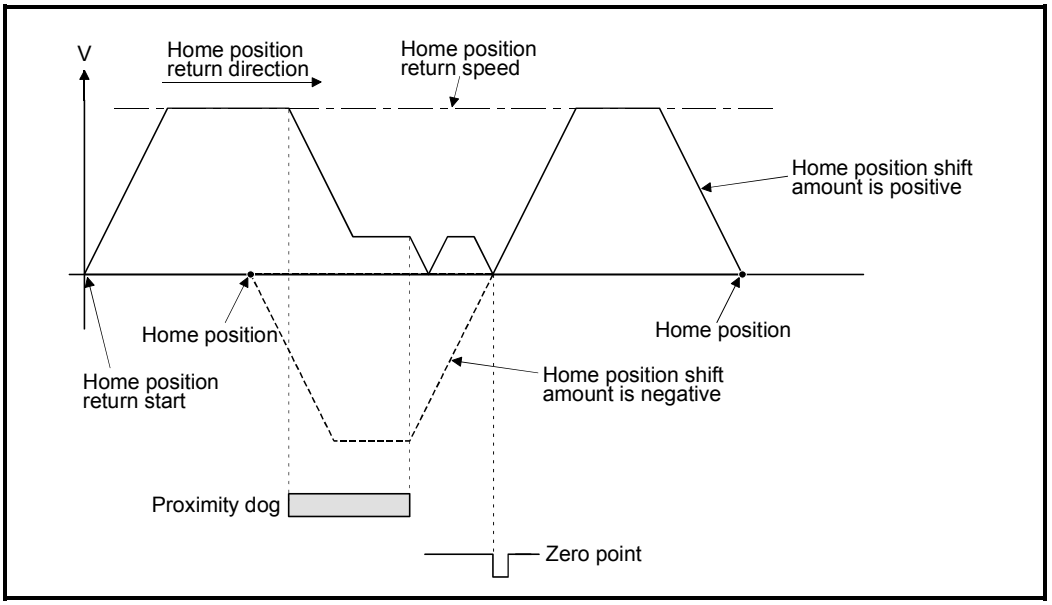

Fig. 6.48 Operation for home position shift with the home position return speed

(b) Home position shift operation with the "creep speed"

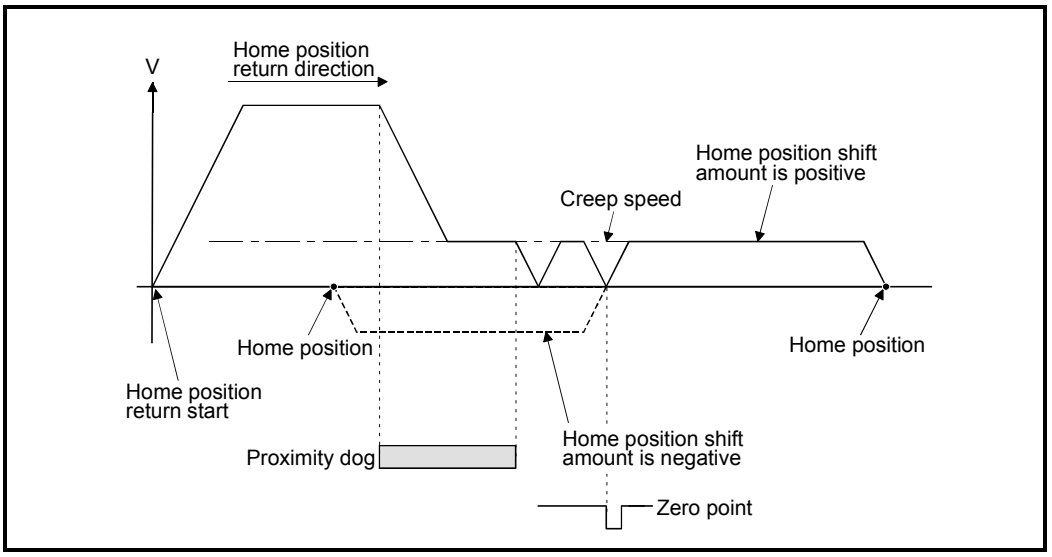

Fig. 6.49 Operation for home position shift with the creep speed

[Cautions]

(1) Valid/invalid of home position shift amount setting value by the home position return method.

Home position return methods	Valid/invalid of home position shift amount
Proximity dog type	○
Count type	○
Data set type	×
Dog cradle type	○
Stopper type	×
Limit switch combined type	○

○ : Valid, × : Invalid

(2) Axis monitor devices and axis statuses are set after completion of home position shift.

(3) When the home position return by proximity dog type set the travel value after proximity dog ON and home position shift amount within the range of "-2147483648 to 2147483647" [$\times 10^{-1}$ μm, $\times 10^{-5}$ inch, 10^{-5} degree, PLS].

6.23.15 Condition selection of home position set

A home position return must be made after the servomotor has been rotated more than one revolution to pass the axis through the Z-phase (motor reference position signal) and the zero pass signal (M2406+20n) has been turned ON.
When "1 : Not need to pass motor Z phase after the power supply is switched on" is selected in the "function selection C-4, (PC17) Condition selection of home position set" of servo parameter (expansion setting parameter), if it does not pass zero point with the motor rotation after turning the servo amplifier power ON, the zero pass signal (M2406+20n) can be turned ON.

[Data Setting]

Set the following "servo parameter" using a peripheral devices to select the "function selection C-4".
Set the servo parameters for every axis.

Table 6.6 Servo parameter (expansion setting parameter)

Items	Setting details	Setting value	Initial value
Function selection C-4 (PC17) Condition selection of home position set	Set the condition selection of home position set in the absolute position system.	0: Need to pass motor Z phase after the power supply is switched on 1: Not need to pass motor Z phase after the power supply is switched on	0

[Cautions]

(1) When "1 : Not need to pass motor Z phase after the power supply is switched on" is set as the above servo parameter, a restrictions such as "make the home position return after the servomotor is rotated more than one revolution to pass the axis through the Z-phase (motor reference position signal) " is lost.

(2) When "1 : Not need to pass motor Z phase after the power supply is switched on" is selected in the "function selection C-4" of servo parameter (expansion setting parameter), if it does not pass zero point at the servo amplifier power ON, the zero pass signal (M2406+20n) turns ON.

(3) When the above parameter is changed, turn the servo amplifier power OFF to ON after resetting or turning power OFF to ON of Multiple CPU system.

⚠CAUTION

● Do not set the "1 : Not need to pass motor Z phase after the power supply is switched on" for axis which executes the home position return again after it continues traveling the same direction infinitely.

6.23.16 Servo program for home position return

The home position return executed using the ZERO servo instruction.

Servo instruction	Positioning method	Number of controllable axes	Items set by peripheral devices																							Speed change
			Common							Arc			Parameter block											Others		
			Parameter block No.	Axis	Address/travel value	Command speed	Dwell time	M-code	Torque limit value	Auxiliary point	Radius	Central point	Control unit	Speed limit value	Acceleration time	Deceleration time	Rapid stop deceleration time	Torque limit value	Deceleration processing on stop input	Allowable error range for circular interpolation	S-curve ratio	Others	Program No.		
ZERO	–	1		○																						

○: Must be set

[Control details]

(1) Home position return is executed by the home position return method specified with the home position return data (Refer to Section 6.23.1).
Refer to the following sections for details of the home position return methods :

- Proximity dog type 1..... Section 6.23.2
- Proximity dog type 2..... Section 6.23.3
- Count type 1..... Section 6.23.4
- Count type 2..... Section 6.23.5
- Count type 3..... Section 6.23.6
- Data set type 1..... Section 6.23.7
- Data set type 2..... Section 6.23.8
- Dog cradle type..... Section 6.23.9
- Stopper type 1..... Section 6.23.10
- Stopper type 2..... Section 6.23.11
- Limit switch combined type..... Section 6.23.12

[Program]

Servo program No. 0 for home position return is shown as the following conditions.

(1) System configuration

Home position return of Axis 4.

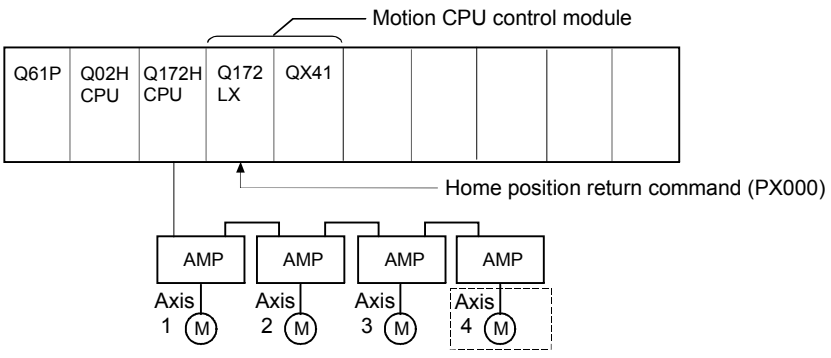

(2) Servo program example

Servo program No. 0 for home position return is shown below.

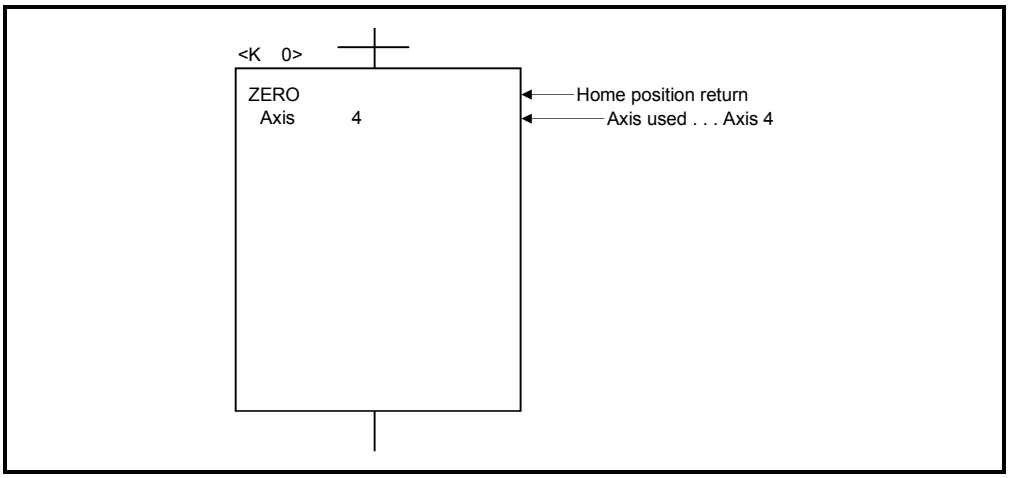

(3) Motion SFC program

Motion SFC program for which executes the servo program is shown below.

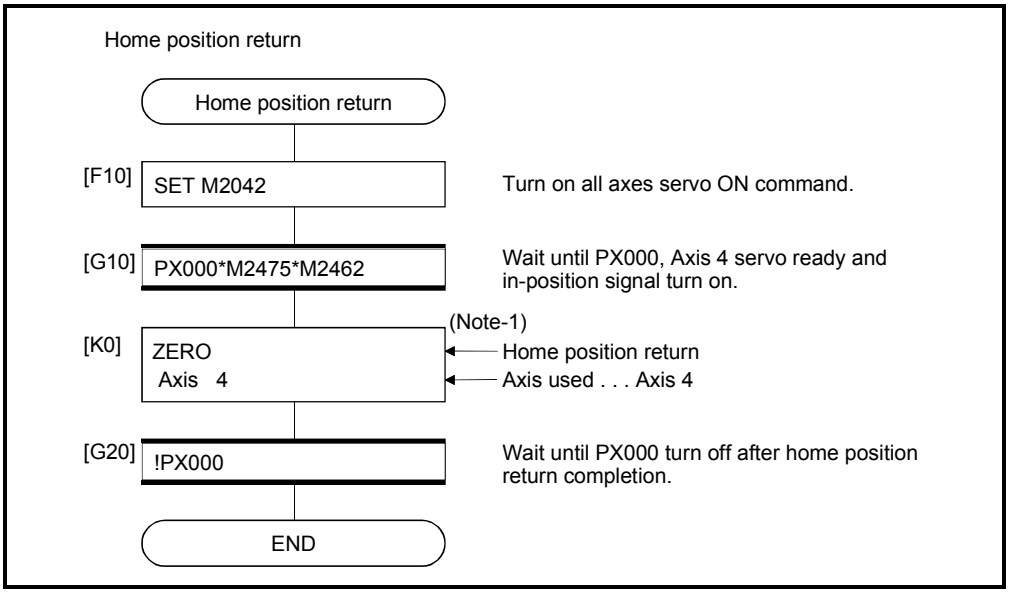

(Note-1) : It is necessary to turn on the zero pass signal before execution of the home position return instruction for data set type home position return.

(Note-2) : Example of the above Motion SFC program is started using the automatic start or PLC program.

[Cautions]

If the home position is not within the in-position range of servo parameter, it does not mean having reached the home position data and the home position return does not end in the proximity dog type, count type, data set type 1, dog cradle type, or limit switch combined type home position return. In this case, adjusts the in-position range of servo parameter or position control gain.

6.24 High-Speed Oscillation

Positioning of a specified axis is caused to oscillate on a sine wave.

Servo instruction	Positioning method	Number of controllable axes	Items set by peripherals: Common: Parameter block No.	Common: Axis	Common: Address/travel value	Common: Command speed	Common: Dwell time	Common: M-code	Common: Torque limit value	OSC: Starting angle	OSC: Amplitude	OSC: Frequency	Parameter block: Control unit	Parameter block: Speed limit value	Parameter block: Acceleration time	Parameter block: Deceleration time	Parameter block: Rapid stop deceleration time	Parameter block: Torque limit value	Parameter block: Deceleration processing on stop input	Parameter block: Allowable error range for circular interpolation	Parameter block: S-curve ratio	Others: Cancel	Others: WAIT-ON/OFF	Speed change
OSC		1	△	○				△		○	○	○						△				△		Invalid

○: Must be set
△: Set if required

[Control details]

The designated axis caused to oscillate on a specified sine wave.
Acceleration/deceleration processing is not performed.

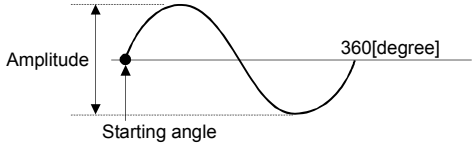

(1) Amplitude

Set the amplitude of the oscillation in the setting units.
The amplitude can be set within the range of 1 to 2147483647.

(2) Starting angle

Set the angle on the sine curve at which oscillation is to start.
The setting range is 0 to 359.9 [degree]

(3) Frequency

Set how many sine curve cycles occur in one minute.
The setting range is 1 to 5000 [CPM].

POINT

Since acceleration/deceleration processing is not performed, you should set the starting angle to 90 or 270 [degree] in order to avoid an abrupt start.

[Cautions]

(1) If the amplitude setting is outside the range, the servo program setting error [25] occurs and operation does not start.

(2) If the starting angle setting is outside the range, the servo program setting error [26] occurs and operation does not start.

(3) If the frequency setting is outside the range, the servo program setting error [27] occurs and operation does not start.

(4) Operation is continually repeated until a stop signal is input after the start.

(5) Speed changes during operation are not possible. Attempted speed changes will cause minor error [310].

[Program]

An example of a program for high-speed oscillation is shown below.

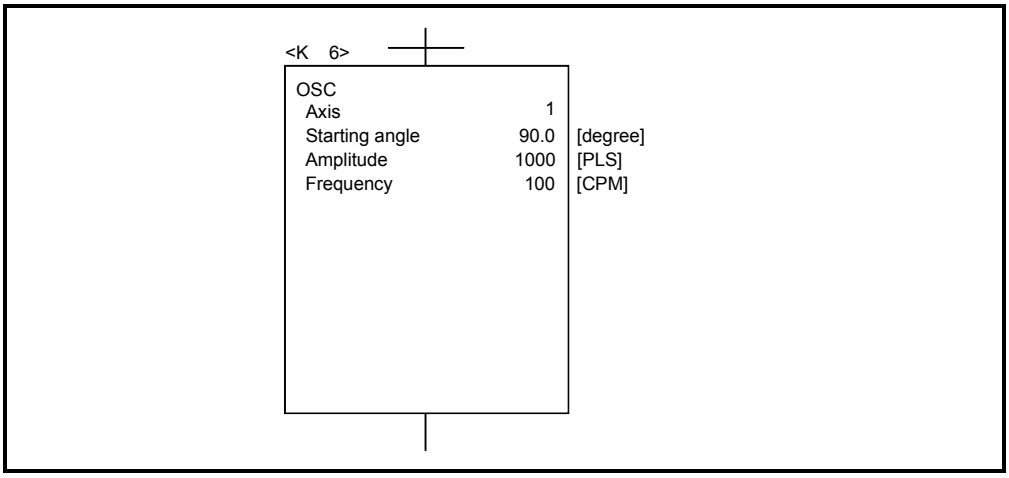

7. AUXILIARY AND APPLIED FUNCTIONS

This section describes the auxiliary and applied functions for positioning control in the Multiple CPU system.

7.1 M-code Output Function

M-code is a code No. between 0 and 32767 which can be set for every positioning control. During positioning control, these M-codes are read using the Motion SFC program to check the servo program during operation and to command auxiliary operations, such as clamping, drill rotation and tool replacement.

(1) Setting of M-codes

M-code can be set using a peripheral device at the creation and correction of the servo program.

(2) Storage of M-code and read timing

(a) M-codes are stored in the M-code storage register of the axis specified with the positioning start completion and specified points (at the speed switching control or constant-speed control).
During interpolation control, the M-codes are stored in all axes which perform interpolation control.

(b) When the M-code is read at the positioning start completion, use the positioning start complete signal (M2400+20n) as the reading command.

(c) When the M-code is read at positioning completion, use the positioning complete signal (M2401+20n) as the read command.

At the position control or speed control

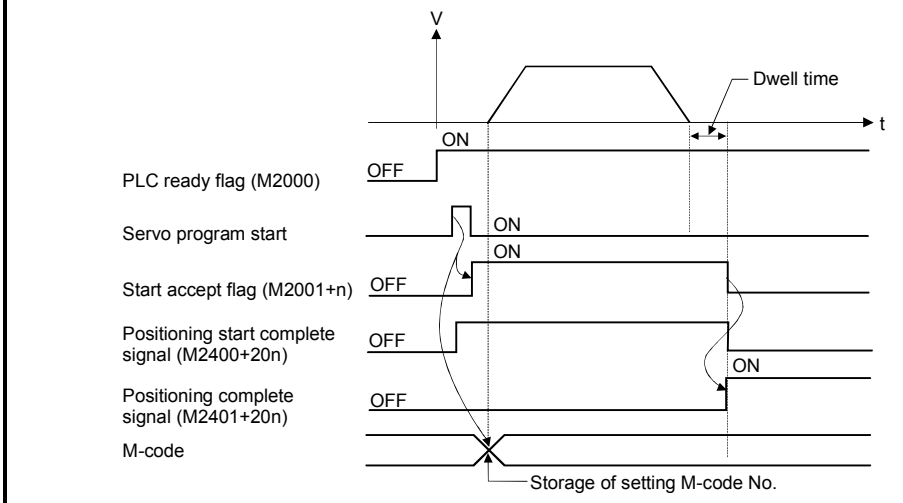

At the speed switching control

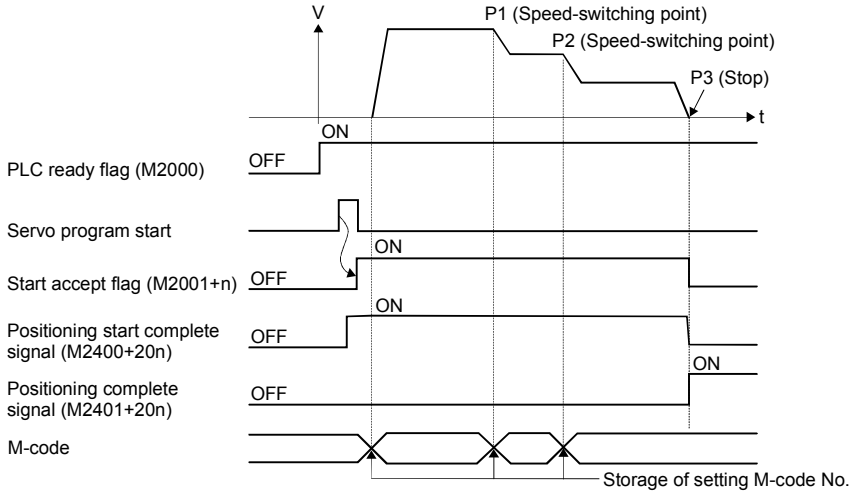

(3) Resetting of M-codes

M-codes can be reset by setting of the M-code output devices to zero.
Use this method during positioning control to perform operations unrelated to the servo program, such as when it has been difficult to output the M-code during the previous positioning control.
However, M-code is set55 during the speed switching control or constant-speed control, the M-code output of the servo program takes priority.

(4) Program example

(a) The Motion SFC program to read M-codes is shown as the following conditions.

1) Axis used No. ..... Axis 3

2) Processing at the positioning start by M-code

..... M-code No. is output as BCD code to Y110 to Y11F

3) Processing at the positioning completion by M-code

a) M-code = 3..... Y120 turns on

b) M-code = 5..... Y121 turns on

c) M-code is except for (3 or 5) ..... Y122 turns on

(b) Motion SFC program with the above conditions are shown below.

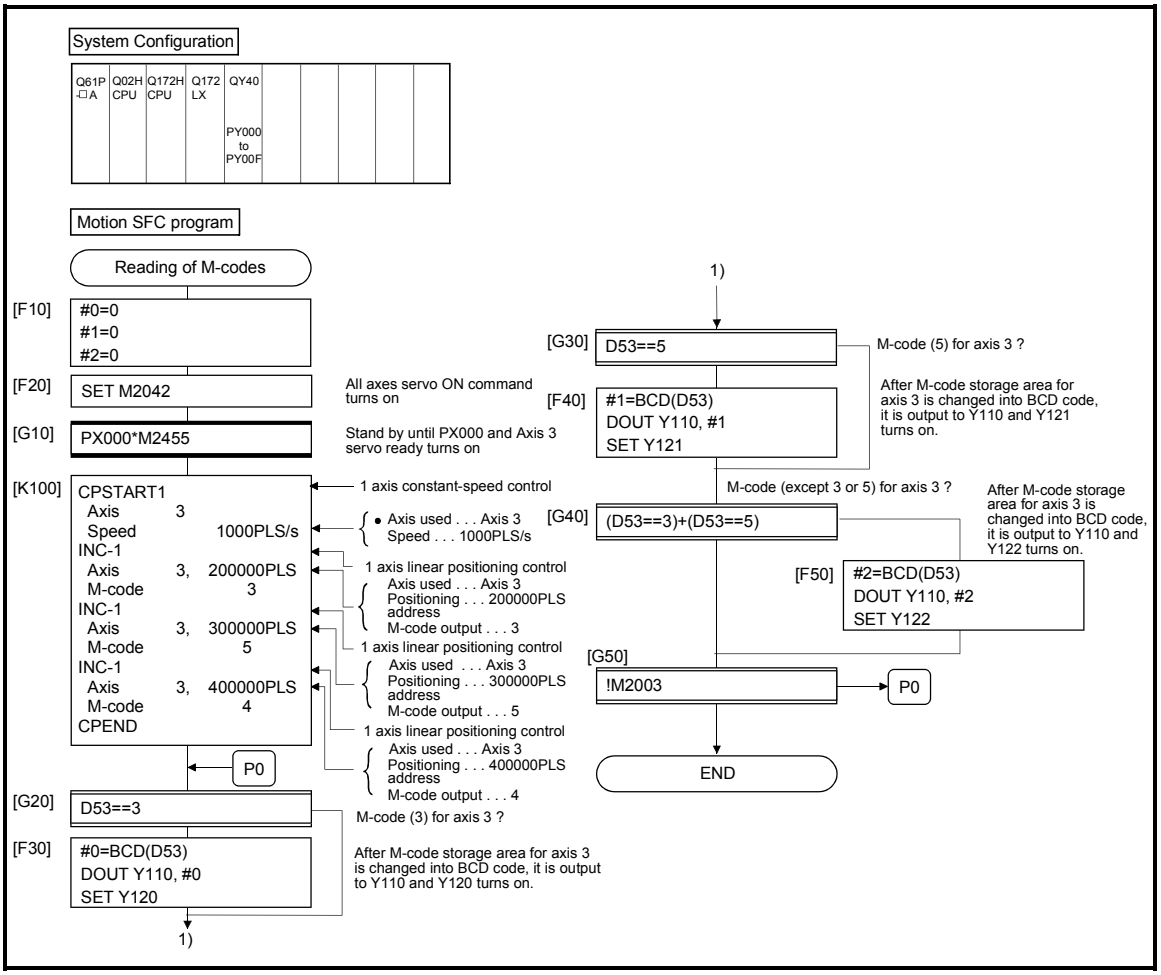

7.2 Backlash Compensation Function

This function compensates for the backlash amount in the machine system. When the backlash compensation amount is set, extra feed pulses equivalent to the backlash compensation amount set up whenever the travel direction is generated at the positioning control, JOG operation or manual pulse generator operation.

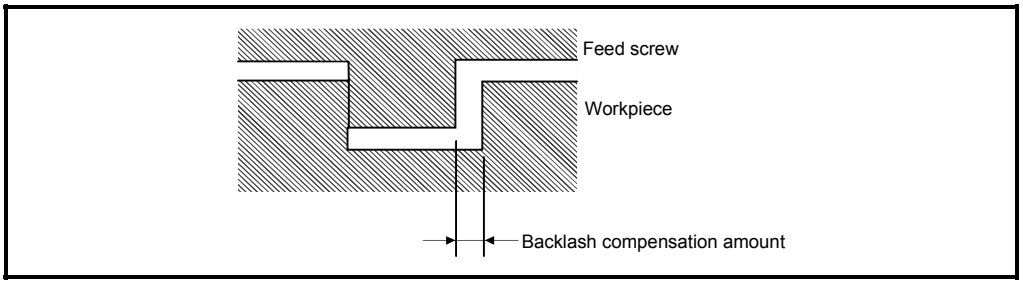

Fig.7.1 Backlash compensation amount

(1) Setting of the backlash compensation amount

The backlash compensation amount is one of the fixed parameters, and is set for each axis using a peripheral device.
The setting range differs according to whether [mm], [inch], [degree] or [PLS] units are used as shown below.

(a) [mm] units

• 0 to 6553.5

• $0 \leqq \dfrac{\text{(Backlash compensation amount)}}{\text{(Travel value per PLS)}} \leqq 65535\text{[PLS]}$

(Decimal fraction rounded down)

(b) [inch] or [degree] units

• 0 to 0.65535

• $0 \leqq \dfrac{\text{(Backlash compensation amount)}}{\text{(Travel value per PLS)}} \leqq 65535\text{[PLS]}$

(Decimal fraction rounded down)

(c) [PLS] units

• 0 to 65535

• $0 \leqq \dfrac{\text{(Backlash compensation amount)} \times \text{(PLS per rotation)}}{\text{(Travel value per rotation)}} \leqq 65535\text{[PLS]}$

(Decimal fraction rounded down)

(2) Backlash compensation processing

Details of backlash compensation processing are shown below.

Table 7.2 Details of backlash compensation processing

Condition	Processing
First start after power on	• If travel direction is equal to home position return direction, the backlash compensation is not executed. • If travel direction is not equal to home position return direction, the backlash compensation is executed.
JOG operation start	• If travel direction is changed at the JOG operation start, the backlash compensation is executed.
Positioning start	• If travel direction is changed, the backlash compensation is executed.
Manual pulse generator operation	• If travel direction is changed, the backlash compensation is executed.
Home position return completion	• The backlash compensation is executed after home position return completion.
Absolute position system	• Status stored at power off and applied to absolute position system.

POINTS

(1) The feed pulses of backlash compensation amount are added to the feed current value.

(2) When the backlash compensation amount is changed, the home position return is required.
When the home position return is not executed, the original backlash compensation amount is not changed.

7.3 Torque Limit Function

This function restricts the generating torque of the servomotor within the setting range. If the torque required for control exceeds the torque limit value during positioning control, it restricts with the setting torque limit value.

(1) Setting range of the torque limit value
It can be set within the range of 1 to 1000[%] of the rated torque.

(2) Setting method of torque limit value
Set the torque limit value is shown below.
(a) Setting in the parameter block (Refer to Section 4.3).
Set the torque limit value in the parameter block.
By setting the parameter block No. used in the servo program, it can be restricted the generating torque of the servomotor within the specified torque limit value for every positioning control.
(b) Setting in the servo program
By setting the torque limit value in the servo program, it can be restricted the generating torque of the servomotor within the specified torque limit value at the execution of the servo program.
(c) Setting in the Motion SFC program
By executing the torque limit value change request (CHGT) in the Motion SFC program or operating control step, it can be set the generating torque of the servomotor within the specified torque control value.
(Refer to the "Q173HCPU/Q172HCPU Motion controller (SV13/SV22) Programming Manual (Motion SFC)" for details.

Example

Setting for the torque limit value with the constant-speed control (CPSTART 1)

(1) Servo program

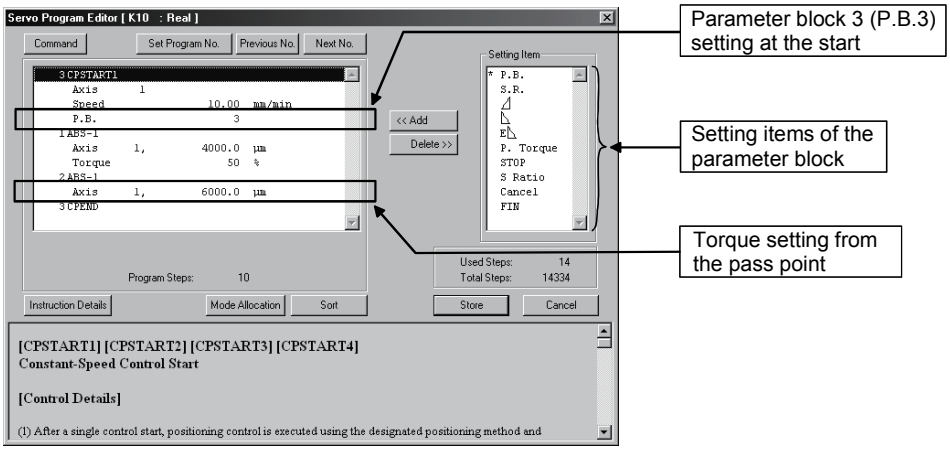

(2) Parameter block

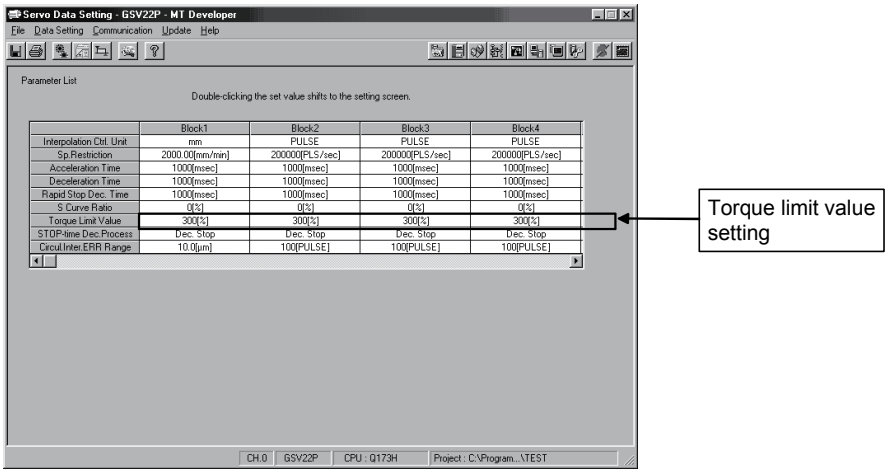

(3) Operation description

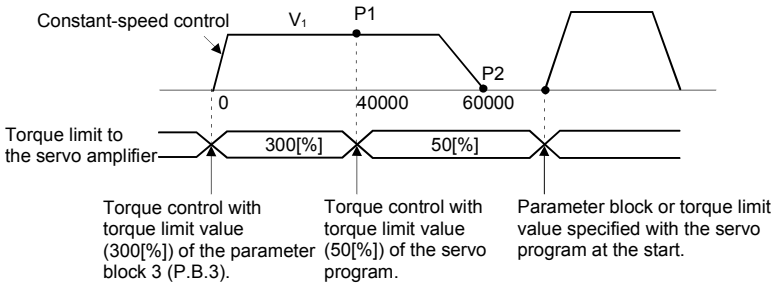

7.4 Skip Function in which Disregards Stop Command

When the current positioning is stopped by input from external source and the next positioning control is performed, it enables starting of the next positioning control even if the input from external source is on (continuation).
There are following tow functions in the function called "Skip".
• Skip during CP command (Refer to Section "6.17.6 Pass point skip function".)

• Skip in which disregards stop command
Usually, although an error [＊＊＊] occurs with the servo program start during the STOP signal on, if M3209+20n turns on and the servo program starts, the next servo program starts even if during the STOP signal on.

(1) The procedure for the skip function by the external STOP signal and Motion SFC program is shown below.

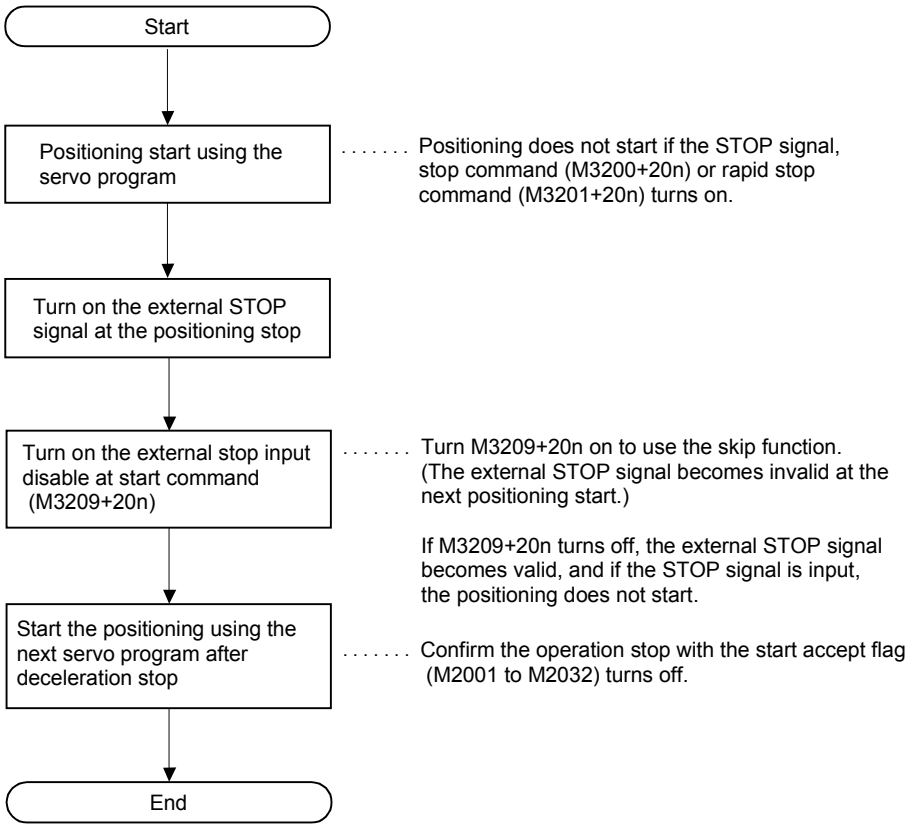

(2) Operation timing

The operation timing for the skip function is shown below.

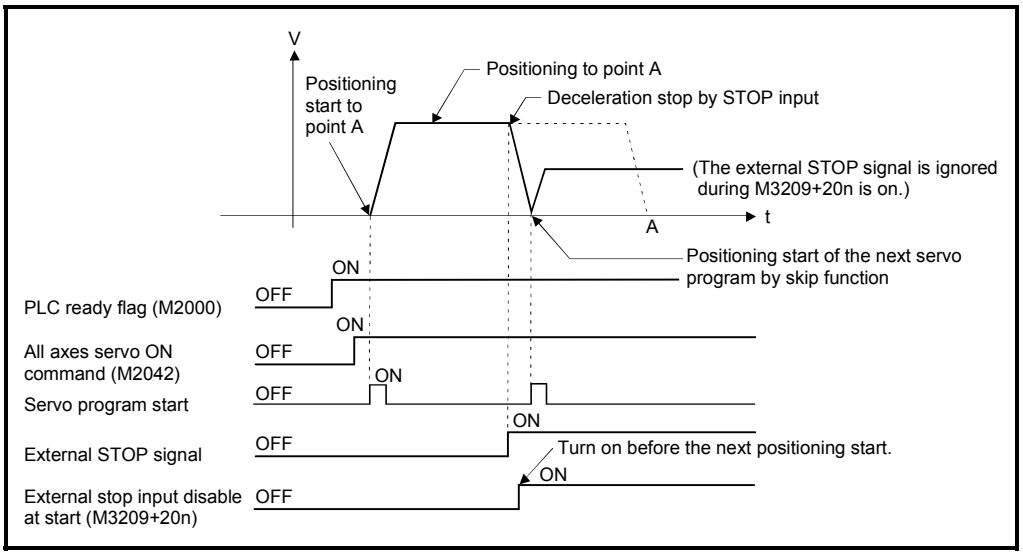

7.5 Cancel of the Servo Program

This function performs a deceleration stop of executing servo program during execution by turning on the cancel signal.

[Control details]

(1) When the cancel signal is turned on during execution of a program for which the cancel has been specified, the positioning processing is suspended, and a deceleration stop is executed.

[Data setting]

(1) Cancel signal device
The usable cancel signal devices are shown below.
X, Y, M, B, F

[Note]

(1) This function cannot be used in the home position return instruction (ZERO) or simultaneous start instruction (START).
For details on whether other instructions can be used or not, refer to the servo instruction list (5.2(2)).

[Operation timing]

The operation timing for deceleration stop is shown below.

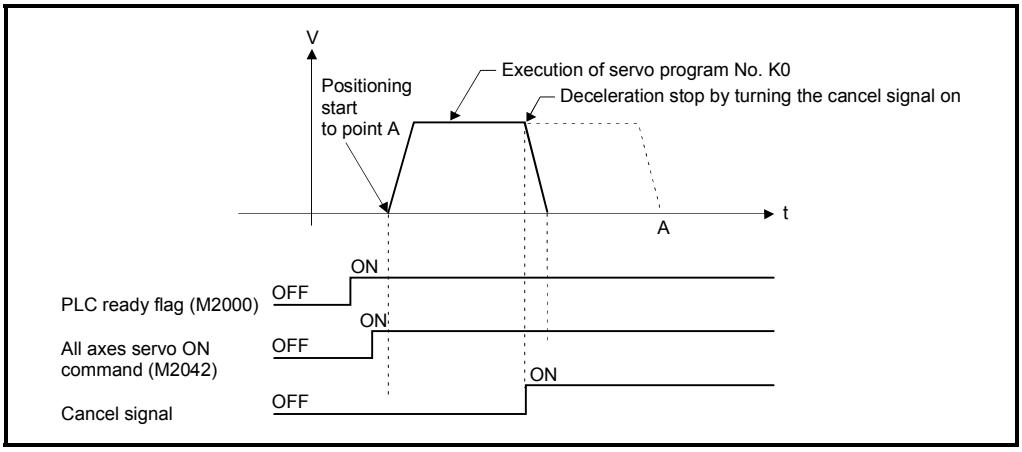

[Program example]

Motion SFC program is shown bellow.

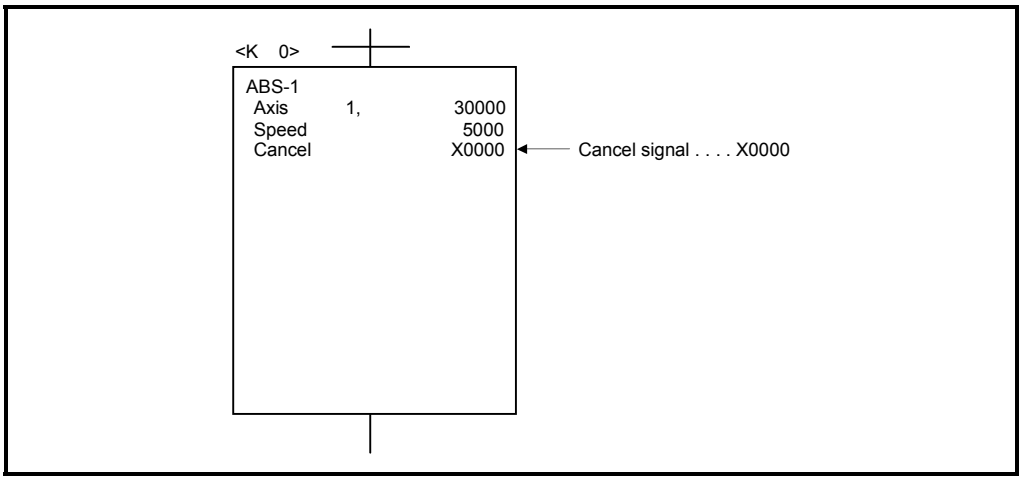

7.5.1 Cancel/start

When a cancel/start has been set in the setting items of the servo program which was started at the motion control step of the Motion SFC program, the cancel of the running servo program is valid but the servo program specified to start after a cancel is ignored, without being started.
Example of the Motion SFC program which executed control equivalent to a cancel start is shown below.

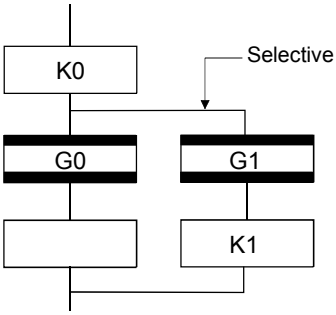

Providing transition G1 with cancel device condition specified with servo program K0 will cancel to execute of servo program K0 and allow servo program K1 to start.

MEMO

APPENDICES

APPENDIX 1 Error Codes Stored Using The Motion CPU

The servo program setting errors and positioning errors are detected in the Motion CPU side.

(1) Servo program setting errors

These are positioning data errors set in the servo program, and it checks at the start of the each servo program.
They are errors that occur when the positioning data is specified indirectly.
The operations at the error occurrence are shown below.

- The servo program setting error flag (M9079) turns on.
- The erroneous servo program is stored in the error program No. storage register (D9189).
- The error code is stored in the error item information register (D9190).

(2) Positioning error

(a) Positioning errors occurs at the positioning start or during positioning control.
There are minor errors, major errors and servo errors.

1) Minor errors…… These errors occur in the Motion SFC program or servo program, and the error codes 1 to 999 are used.
Check the error code, and remove the error cause by correcting the Motion SFC program or servo program.

2) Major errors…… These errors occur in the external input signals or control commands from the Motion SFC program, and the error codes 1000 to 1999 are used.
Check the error code, and remove the error cause of the external input signal state or Motion SFC program.

3) Servo errors ..… These errors detected in the servo amplifier, and the error codes 2000 to 2999 are used.
Check the error code, and remove the error cause of the servo amplifier side.

(b) The error detection signal of the erroneous axis turns on at the error occurrence, and the error codes are stored in the minor error code, major error code or servo error code storage register.

Table 1.1 Error code storage registers, error detection signals

Device / Error class	Error code storage register																Error detection signal
	Axis 1	Axis 2	Axis 3	Axis 4	Axis 5	Axis 6	Axis 7	Axis 8	Axis 9	Axis 10	Axis 11	Axis 12	Axis 13	Axis 14	Axis 15	Axis 16	
Minor error	D6	D26	D46	D66	D86	D106	D126	D146	D166	D186	D206	D226	D246	D266	D286	D306	M2407+20n
Major error	D7	D27	D47	D67	D87	D107	D127	D147	D167	D187	D207	D227	D247	D267	D287	D307	
Servo error	D8	D28	D48	D68	D88	D108	D128	D148	D168	D188	D208	D228	D248	D268	D288	D308	M2408+20n

Device / Error class	Error code storage register																Error detection signal
	Axis 17	Axis 18	Axis 19	Axis 20	Axis 21	Axis 22	Axis 23	Axis 24	Axis 25	Axis 26	Axis 27	Axis 28	Axis 29	Axis 30	Axis 31	Axis 32	
Minor error	D326	D346	D366	D386	D406	D426	D446	D466	D486	D506	D526	D546	D566	D586	D606	D626	M2407+20n
Major error	D327	D347	D367	D387	D407	D427	D447	D467	D487	D507	D527	D547	D567	D587	D607	D627	
Servo error	D328	D348	D368	D388	D408	D428	D448	D468	D488	D508	D528	D548	D568	D588	D608	D628	M2408+20n

(Note): The range of axis No. 1 to 8 is valid in the Q172HCPU.

(c) If another error occurs after an error code has been stored, the existing error code is overwritten, deleting it.
However, the error history can be checked using a peripheral device started with the SW6RN-GSV□P software.

(d) Error detection signals and error codes are held until the error code reset command (M3207+20n) or servo error reset command (M3208+20n) turns on.

POINTS

(1) Even if the servo error reset (M3208+20n) turns on at the servo error occurrence, the same error code might be stored again.

(2) Reset the servo error after removing the error cause of the servo amplifier side at the servo error occurrence.

APPENDIX 1.1 Servo program setting errors (Stored in D9190)

The error codes, error contents and corrective actions for servo program setting errors are shown in Table 1.2.
In the error codes marked with "Note" indicates the axis No. (1 to 32).

Table 1.2 Servo program setting error list

<table>
<tr><th>Error code stored in D9190</th><th>Error name</th><th>Error contents</th><th>Error processing</th><th>Corrective action</th></tr>
<tr><td>1</td><td>Parameter block No. setting error</td><td>The parameter block No. is outside the range of 1 to 64.</td><td>Execute the servo program with the default value "1" of parameter block.</td><td>Set the parameter block No. within the range of 1 to 64.</td></tr>
<tr><td rowspan="2">n03 (Note)</td><td rowspan="2">Address (travel value) setting error (Except the speed control and speed/position control.) (Setting error for linear axis at the helical-interpolation.)</td><td>(1) The address is outside the setting range at the positioning start for absolute data method.
<table><tr><th>Unit</th><th colspan="2">Address setting range</th></tr><tr><td>degree</td><td>0 to 35999999</td><td>× 10^{-5} [degree]</td></tr></table></td><td rowspan="2">(1) Positioning control does not start. (All interpolation control at the interpolation control.)
(2) If the error is detected during the speed-switching control or constant-speed control, a deceleration stop is made.
(3) If an error occurs in one servo program, all servo programs do not execute during the simultaneous start.</td><td>(1) If the control unit is [degree], set the address within the range of 0 to 35999999.</td></tr>
<tr><td>(2) The travel value is set to -2147483648 (H80000000) at the positioning start for incremental data method.</td><td>(2) Set the travel value within the range of "0 to ± (2^{31}-1)".</td></tr>
<tr><td>4</td><td>Command speed error</td><td>(1) The command speed is outside the range of 1 to the speed limit value.
(2) The command speed is outside the setting range.
<table><tr><th>Unit</th><th colspan="2">Speed setting range</th></tr><tr><td>mm</td><td>1 to 600000000</td><td>× 10^{-2} [mm/min]</td></tr><tr><td>inch</td><td>1 to 600000000</td><td>× 10^{-3} [inch/min]</td></tr><tr><td>degree</td><td>1 to 2147483647</td><td>× 10^{-3} [degree /min] (Note-1)</td></tr><tr><td>PLS</td><td>1 to 2147483647</td><td>[PLS/s]</td></tr></table></td><td>(1) Positioning control does not start if the command speed is "0" or less.
(2) If the command speed exceeds the speed limit value, control with the speed limit value.</td><td>Set the command speed within the range of 1 to the speed limit value.</td></tr>
<tr><td>5</td><td>Dwell time setting error</td><td>The dwell time is outside the range of 0 to 5000.</td><td>Control with the default value "0".</td><td>Set the dwell time within the range of 0 to 5000.</td></tr>
<tr><td>6</td><td>M-code setting error</td><td>The M-code is outside the range of 0 to 32767.</td><td>Control with the default value "0".</td><td>Set the M-code within the range of 0 to 32767.</td></tr>
<tr><td>7</td><td>Torque limit value setting error</td><td>The torque limit value is outside the range of 1 to 1000.</td><td>Control with the torque limit value of the specified parameter block.</td><td>Set the torque limit value within the range of 1 to 1000.</td></tr>
</table>

(Note-1): When the "speed control 10× multiplier setting for degree axis" is set to "valid", the setting range is 0.01 to 21474836.47 [degree/min].

Table 1.2 Servo program setting error list (Continued)

<table>
<tr><th>Error code stored in D9190</th><th>Error name</th><th>Error contents</th><th>Error processing</th><th>Corrective action</th></tr>
<tr><td rowspan="2">n08 (Note)</td><td rowspan="2">Auxiliary point setting error
(At the auxiliary point-specified circular interpolation.)
(At the auxiliary point-specified helical nterpolation.)</td><td>(1) The auxiliary point address is outside the setting range at the positioning start for absolute data method.
<table><tr><td>Unit</td><td colspan="2">Address setting range</td></tr><tr><td>degree</td><td>0 to 35999999</td><td>× 10^{-5} [degree]</td></tr></table></td><td rowspan="2">Positioning control does not start.</td><td>(1) If the control unit is [degree], set the auxiliary point address within the range of 0 to 35999999.</td></tr>
<tr><td>(2) The auxiliary point address is set to -2147483648 (H80000000) at the positioning start for incremental data method.</td><td>(2) Set the auxiliary point address within the range of 0 to ± (2^{31}-1).</td></tr>
<tr><td rowspan="2">n09 (Note)</td><td rowspan="2">Radius setting error
(At the radius-specified circular interpolation.)
(At the radius-specified helical interpolation.)</td><td>(1) The radius is outside the setting range at the positioning control for absolute data method.
<table><tr><td>Unit</td><td colspan="2">Address setting range</td></tr><tr><td>degree</td><td>0 to 35999999</td><td>× 10^{-5} [degree]</td></tr></table></td><td rowspan="2">Positioning control does not start.</td><td>(1) If the control unit is [degree], set the radius within the range of 0 to 35999999.</td></tr>
<tr><td>(2) The radius is set to "0" or negative setting at the positioning start for incremental data method.</td><td>(2) Set the radius within the range of 1 to (2^{31}-1).</td></tr>
<tr><td rowspan="2">N10 (Note)</td><td rowspan="2">Central point setting error
(At the central point-specified circular interpolation.)
(At the central point-specified helical interpolation.)</td><td>(1) The central point address is outside the setting range at the positioning start for absolute data method.
<table><tr><td>Unit</td><td colspan="2">Address setting range</td></tr><tr><td>degree</td><td>0 to 35999999</td><td>× 10^{-5} [degree]</td></tr></table></td><td rowspan="2">Positioning control does not start.</td><td>(1) If the control unit is [degree], set the central point address within the range of 0 to 35999999.</td></tr>
<tr><td>(2) The central point is set to -2147483648 (H80000000) at the positioning start for incremental data method.</td><td>(2) Set the central point address within the range of 0 to ± (2^{31}-1).</td></tr>
<tr><td>11</td><td>Interpolation control unit setting error</td><td>The interpolation control unit is set outside the range of 0 to 3.</td><td>Control with the default value "3".</td><td>Set the interpolation control unit within the range of 0 to 3.</td></tr>
<tr><td>12</td><td>Speed limit value setting error</td><td>The speed limit value is set outside the setting range.</td><td>Control with the default value 200000[PLS/s].</td><td>Set the speed limit value within the setting range.
[For PLS]
1 to 2147483647[PLS/s]</td></tr>
<tr><td rowspan="3">13</td><td>Acceleration time setting error</td><td>The acceleration time is set to "0".</td><td rowspan="3">Control with the default value "1000".</td><td>Set the acceleration time within the range of 1 to 65535.</td></tr>
<tr><td>FIN acceleration/ deceleration setting error</td><td>The FIN acceleration/deceleration time is set except 1 to 5000.</td><td>The FIN acceleration/ deceleration time within the range of 1 to 5000.</td></tr>
<tr><td>Fixed position stop acceleration/ deceleration time setting error</td><td>The fixed position stop acceleration/ deceleration time is set to "0".</td><td>Set the fixed position stop acceleration/deceleration time within the range of 1 to 65535.</td></tr>
<tr><td>14</td><td>Deceleration time setting error</td><td>The deceleration time is set to "0".</td><td>Set the deceleration time within the range of 1 to 65535.</td></tr>
</table>

Table 1.2 Servo program setting error list (Continued)

<table>
<tr><th>Error code stored in D9190</th><th>Error name</th><th>Error contents</th><th>Error processing</th><th>Corrective action</th></tr>
<tr><td>15</td><td>Rapid stop deceleration time setting error</td><td>The rapid stop deceleration time is set to "0".</td><td>Control with the default value "1000".</td><td>Set the rapid stop deceleration time within the range of 1 to 65535.</td></tr>
<tr><td>16</td><td>Torque limit value setting error</td><td>The torque limit value is outside the range of 1 to 1000.</td><td>Control with the default value "300[%]".</td><td>Set the torque limit value within the range of 1 to 1000.</td></tr>
<tr><td>17</td><td>Allowable error range for circular interpolation setting error</td><td>The allowable error range for circular interpolation is outside the setting range.
<table><tr><th>Unit</th><th colspan="2">Address setting range</th></tr><tr><td>mm</td><td rowspan="4">0 to 100000</td><td>[μm]</td></tr><tr><td>inch</td><td>× 10⁻⁵ [inch]</td></tr><tr><td>degree</td><td>× 10⁻⁵ [degree]</td></tr><tr><td>PLS</td><td>[PLS]</td></tr></table></td><td>Control with the default value "100[PLS]".</td><td>Set the allowable error range for circular interpolation within the setting range.</td></tr>
<tr><td>18</td><td>Repeat count error</td><td>The repeat count is outside the range of 1 to 32767.</td><td>Control the repeat count with "1".</td><td>Set the repeat count within the range of 1 to 32767.</td></tr>
<tr><td rowspan="3">19</td><td rowspan="3">START instruction setting error</td><td>(1) The servo program specified with the START instruction does not exist.</td><td rowspan="3">Positioning control does not start.</td><td>(1) Create the servo program specified with the START instruction.</td></tr>
<tr><td>(2) There is a START instruction in the specified servo program.</td><td>(2) Delete the servo program specified with the START instruction.</td></tr>
<tr><td>(3) The starting axis of the specified servo program overlap.</td><td>(3) Do not overlap the starting axis.</td></tr>
<tr><td>20</td><td>Point setting error</td><td>Point is not specified in the instruction at the constant-speed control.</td><td>Positioning control does not start.</td><td>Set a point between CPSTART and CPEND.</td></tr>
<tr><td>21</td><td>Reference axis speed setting error</td><td>The axis except interpolation axis is set as the reference axis at the linear interpolation of the reference axis speed-specified method.</td><td>Positioning control does not start.</td><td>Set one of the interpolation axes as the reference axis.</td></tr>
<tr><td>22</td><td>S-curve ratio setting error</td><td>S-curve ratio is set outside the range of 0 to 100[%] at the S-curve acceleration/deceleration.</td><td>Control the S-curve ratio with 100[%].</td><td>Set the S-curve ratio within the range of 0 to 100[%].</td></tr>
<tr><td>23</td><td>VSTART setting error</td><td>Not even one speed-switching point has been set between a VSTART and VEND instruction, or between FOR and NEXT instruction.</td><td>Positioning control does not start.</td><td>Set the speed switching point between the VSTART and VEND instructions or the FOR and NEXT instructions.</td></tr>
<tr><td>24</td><td>Cancel function start program No. error</td><td>The start program No. for the cancel function is set outside the range 0 to 4095.</td><td>Positioning control does not start.</td><td>Start after set the start program No. within the range of 0 to 4095.</td></tr>
<tr><td>25</td><td>High-Speed oscillation command amplitude error</td><td>Operation cannot be started because the amplitude specified with the high-speed oscillation function is outside the range 1 to 2147483647.</td><td>Positioning control does not start.</td><td>Start after set the command amplitude within the range of 1 to 214783647.</td></tr>
<tr><td>26</td><td>High-Speed oscillation command starting angle error</td><td>Operation cannot be started because the starting angle specified with the high-speed oscillation function is outside the range of 0 to 3599 (× 0.1[degrees]).</td><td>Positioning control does not start.</td><td>Start after set the starting angle within the range of 0 to 3599 (× 0.1 [degree]).</td></tr>
</table>

Table 1.2 Servo program setting error list (Continued)

Error code stored in D9190	Error name	Error contents	Error processing	Corrective action
27	High-Speed oscillation command frequency error	Operation cannot be started because the frequency specified with the high-speed oscillation function is outside the range of 1 to 5000[CPM].	Positioning control does not start.	Start after set the frequency within the range of 1 to 5000[CPM].
28	Number of helical interpolation pitches error	The specified number of pitches of helical interpolation is outside the range of 0 to 999.	Positioning control does not start.	Set the specified number of pitches within the range of 0 to 999.
900	START instruction setting error	The servo program specified with the servo program start does not exist.	Positioning control does not start.	Set the correct servo program No..
901	START instruction setting error	The axis No. set in the servo program start is different from the axis No. set in the servo program.	Positioning control does not start.	Set the correct axis No.
902	Servo program instruction code error	The instruction code cannot be decoded. (A non-existent instruction code has been specified.)	Positioning control does not start.	Set the correct instruction code.
903	Start error	A virtual mode program was started in the real mode.	Positioning control does not start.	Check the program mode allocation.
904	Start error	A real mode program was started in the virtual mode.	Positioning control does not start.	
905	Start error	Operation disable instructions (VPF, VPR, VPSTART, PVF, PVR, ZERO, VVF, VVR, OSC) was started in virtual mode.	Positioning control does not start.	Correct the servo program.
		Operation disable instructions (ZERO, OSC, CHGA-C, CHGA-E) was started in real mode axis.		
		Operation disable instructions (CHGA-C, CHGA-E) from the S(P).SVST instruction of Motion dedicated instruction was started.		Use the S(P).CHGA instruction of Motion dedicated instruction.
906	Axis No. setting error	Unused axis of the system setting is set in the Motion SFC program set in the servo program start.	Positioning control does not start.	Set the axis No. set in the system setting or mechanical system program.
		It was started by setting the real mode axis in the virtual servo program.		
		It was started in the condition that the real mode axis had been mixed with virtual axis in the interpolation axis.		
		It was started by setting the virtual axis in the real mode program in virtual mode.		
907	Start error	It was started during processing for switching from real mode to virtual mode.	Positioning control does not start.	Use M2043 (real/virtual mode switching request), M2044 (real/virtual mode switching status) as interlocks for start.
908	Start error	It was stated during processing for switching from virtual mode to real mode.		

APPENDIX 1.2 Minor errors

These errors are detected in the PLC program or servo program, and the error codes of 1 to 999 are used.
Minor errors include the setting data errors, starting errors, positioning control errors and current value/speed change errors and system errors.

(1) Setting data errors (1 to 99)

These errors occur when the data set in the parameters for positioning control is not correct.
The error codes, causes, processing, and corrective actions are shown in Table 1.3.

Table 1.3 Setting data error (1 to 99) list

Error code	Erroneous data	Check timing	Error cause	Error processing	Corrective action
21	Home position return data	Home position return start of the count, proximity dog, data set, dog cradle, stopper and limit switch combined type	The home position address is outside the range of 0 to 35999999 ($\times 10^{-5}$[degree]) with degree axis.	Home position return is not started.	Set the home position address within the setting range using a peripheral device.
22		Home position return start of the count, proximity dog, dog cradle, stopper and limit switch combined type	The home position return speed is outside the range of 1 to speed limit value.		Set the home position return speed or less to the speed limit value using a peripheral device.
23			The creep speed is outside the range of 1 to home position return speed.		Set the creep speed below to the home position return speed or less using a peripheral device.
24		Home position return start of the count type	The travel value after the proximity dog ON is outside the range of 0 to (2^{31}-1) ($\times$ unit).		Set the travel value after the proximity dog ON within the setting range using a peripheral device.
25		Home position return start of the count, proximity dog, dog cradle, stopper and limit switch combined type	The parameter block No. is outside the range of 1 to 64.		Set the parameter block No. within the setting range using a peripheral device.
26		Home position return start of the stopper type	Torque limit value at the creep speed is outside the range of 1 to 1000[%].		Set the torque limit value at the creep speed within the setting range using a peripheral device.
27		Home position return start of the usable retry function	Dwell time at the home position return is outside the range of 0 to 5000[ms].		Set the dwell time at the home position return retry within the setting range using a peripheral device.
40	Parameter block	Interpolation control start	The interpolation control unit of the parameter block is different from the control unit of the fixed parameters.	Control with the control unit of the fixed parameters.	Set the same control unit of the fixed parameters and servo parameters.

POINT

When the interpolation control unit of parameter block is different from the control unit of fixed parameters, an error code may not be stored with the combination of units.
Refer to Section 6.1.4 for details.

(2) Positioning control start errors (100 to 199)

These errors are detected at the positioning control start.

The error codes, causes, processing, and corrective actions are shown in Table 1.4.

Table 1.4 Positioning control start error (100 to 199) list

Error code	Control mode												Error cause	Error processing	Corrective action
	Positioning	Fixed-pitch feed	Speed	Speed/position switching	Speed switching	Constant-speed	JOG	Manual pulse generator	Home position return	Position follow-up control	OSC	Speed control with fixed position stop			
100	○	○	○	○	○	○	○	○	○	○	○	○	• The PLC ready flag (M2000) or PCPU ready flag (M9074) is OFF.	Positioning control does not start.	• Set the Motion CPU to RUN. • Turn the PLC ready flag (M2000) on.
101	○	○	○	○	○	○	○	○	○	○	○	○	• The start accept flag (M2001 to M2032) for applicable axis is ON.		• Take an interlock in the program not to start the starting axis. (Use the start accept flag OFF of the applicable axis as the starting condition).
103	○	○	○	○	○	○	○	○	○	○	○	○	• The stop command (M3200+20n) for applicable axis is ON.		• Turn the stop command (M3200+20n) off and start.
104	○	○	○	○	○	○	○	○	○	○	○	○	• The rapid stop command (M3201+20n) for applicable axis is ON.		• Turn the rapid stop command (M3201+20n) off and start.
105 (Note)	○				○	○				○			• The feed current value is outside the range of stroke limit at the start.		• Set within the stroke limit range by the JOG operation. • Set within the stroke limit range by the home position return or current value change.
106 (Note)	○	○			○	○				○	○		• Positioning is outside the range of stroke limit.		• Perform the positioning within the range of stroke limit.
107	○					○							• The address that does not generate an arc is set at the auxiliary point-specified circular interpolation or auxiliary point-specified helical interpolation. (Relationship between the start point, auxiliary point and end point.)		• Correct the addresses of the servo program.
108 (Note)	○					○							• The address that does not generate an arc is set at the R (radius) specified circular interpolation R (radius) specified helical interpolation. (Relationship between the start point, radius and end point.)		

(Note): These errors are stored the error codes of the all applicable interpolation axes at the interpolation operation.

Table 1.4 Positioning control start error (100 to 199) list (Continued)

Error code	Control mode												Error cause	Error processing	Corrective action
	Positioning	Fixed-pitch feed	Speed	Speed/position switching	Speed switching	Constant-speed	JOG	Manual pulse generator	Home position return	Position follow-up control	OSC	Speed control with fixed position stop			
109	○					○							• The address that does not generate an arc is set at the central point-specified circular interpolation or central point-specified helical interpolation. (Relationship between the start point, central point and end point.)	Positioning control does not start.	• Correct the addresses of the servo program.
110 (Note)	○					○							• The difference between the end point address and ideal end point is outside the allowable error range for circular interpolation at the circular interpolation.		
111				○									• The speed/position control restarting was performed, although it was not after stop during operation of the speed/position switching control.		• Do not re-start except the stop during speed/position switching control.
115									○				• The home position return complete signal (M2410+20n) turned on at the home position return of proximity dog, dog cradle and stopper type.		• Do not start continuously for the home position return. Return to a point before the proximity dog signal ON by JOG operation or positioning operation, etc., and perform the home position return.
116							○						• The setting JOG speed is "0".		• Set the correct speed (within the setting range).
													• The setting JOG speed exceeded the JOG speed limit value.	Control with the JOG speed limit value.	
													• The setting JOG speed limit value exceeded the setting range.	Control with the maximum setting range of each control unit.	• Set the correct JOG speed limit value (within the setting range).

(Note): These errors are stored the error codes of the all applicable interpolation axes at the interpolation operation.

Table 1.4 Positioning control start error (100 to 199) list (Continued)

Error code	Control mode												Error cause	Error processing	Corrective action
	Positioning	Fixed-pitch feed	Speed	Speed/position switching	Speed switching	Constant-speed	JOG	Manual pulse generator	Home position return	Position follow-up control	OSC	Speed control with fixed position stop			
117							○						• Both of forward and reverse rotation were set at the simultaneous start for the JOG operation.	Only the applicable axis set to the forward direction starts.	• Set a correct data.
118					○								• The speed-switching point exceeded the end address. • The address of the positioning in the reverse direction is not set.	Positioning control does not start.	• Set the speed-switching point before the end address. • Set the forward direction adddress.
120									○				• ZCT not set The zero pass signal (M2406+20n) turned off at the re-travel at the home position return for proximity dog, count and limit switch combined type or start in the home position return for data set type.	Home position return is not completed correctly.	• Execute the home position return after the zero point passed.
121									○				• When "Not execute servo program" is selected in the operation setting for incompletion of home position return, the home position return request signal (M2409+20n) turns on.	Positioning control does not start.	• Execute servo program after home position return. • In the system which enables execution of servo program even if the home position return request signal (M2409+20n) turns on, set "Execute servo program" as "operation setting for incompletion of home position return".
130												○	• Speed control with fixed position stop with was started for the axis set in except unit [degeree]. • Speed control with fixed position stop was started in the axis which is not "stroke limit invalid".		• Set the unit [degree] in the axis which starts speed control with fixed position stop. • Set the stroke limit invalid "(Upper stroke limit value) equal to (lower stroke limit value)" in the axis which starts speed control with fixed position stop.

Table 1.4 Positioning control start error (100 to 199) list (Continued)

Error code	Control mode												Error cause	Error processing	Corrective action
	Positioning	Fixed-pitch feed	Speed	Speed/position switching	Speed switching	Constant-speed	JOG	Manual pulse generator	Home position return	Position follow-up control	OSC	Speed control with fixed position stop			
140	○												• The travel value of the reference axis is set at "0" in the linear interpolation for reference axis specification.	Positioning control does not start.	• Do not set axis of travel value "0" as the reference axis.
141										○			• The position command device of position follow-up control is set the odd number.		• Set the even number for the position command device of position follow-up control.
142				○					○				• The positioning control which use the external input signal was executed for the axis which has not set the external input signal in the system settings.		• Set the external input signal in the system setting.
145									○				• Unusable instructions were started in the external input signal setting via servo amplifier.		• Do not start the speed/position switching control and count type home position return in the external input signal setting via servo amplifier.
151	○	○	○		○	○	○	○		○			• Not allowed axis started in the virtual mode. (It cannot be started with error at real/ virtual mode switching.		• Start in the virtual mode again after correct the error cause in the real mode.
152	○	○	○		○	○	○	○		○			• It started at the virtual mode and during deceleration by all axes servo OFF (M2042 OFF).		
153	○	○	○		○	○	○	○		○			• It started at the virtual mode and during deceleration by occurrence of the output module servo error.		

(3) Positioning control errors (200 to 299)

These are errors detected during the positioning control.
The error codes, causes, processing and corrective actions are shown in Table 1.5.

Table 1.5 Positioning control error (200 to 299) list

Error code	Control mode												Error cause	Error processing	Corrective action
	Positioning	Fixed-pitch feed	Speed	Speed/position switching	Speed switching	Constant-speed	JOG	Manual pulse generator	Home position return	Position follow-up control	OSC	Speed control with fixed position stop			
200	○	○	○	○	○	○	○	○		○	○		• The PLC ready flag (M2000) turned off during the control by the servo program.	Deceleration stop	• Turn the PLC ready flag (M2000) on after all axes have stopped.
201									○				• The PLC ready flag (M2000) turned off during the home position return.		• Perform the home position return again after turning the PLC ready flag (M2000) on or turning the stop command (M3200+20n) or rapid stop command (M3201+20n) off. (Return to a point before the proximity dog signal ON using JOG operation or positioning operation, and perform the home position return again in the proximity dog type.)
202									○				• The stop command (M3200+20n) turned on during the home position return.		
203									○				• The rapid stop command (M3201+20n) turned on during the home position return.	Rapid stop	
204	○	○	○	○	○	○	○	○	○	○	○	○	• The PLC ready flag (M2000) turned off to on again during deceleration by turning off the PLC ready flag (M2000).	No operation	• Turn the PLC ready flag (M2000) off to on after all axes have stopped. (Turn the PLC ready flag (M2000) off to on during deceleration is "no operation".)
206									○				• All axes rapid stop ([Back Space] key input) is executed using the test mode of a peripheral device during the home position return.	Rapid stop	• Return to a point before the proximity dog signal ON using JOG operation or positioning operation, and perform the home position return again in the proximity dog type. • Return to a point before the proximity dog signal ON using JOG operation or positioning operation, and perform the home position return again, when the proximity dog signal turns off in the count type. (Perform the home position return operation again, when the proximity dog signal turns on in the count type.)

Table 1.5 Positioning control error (200 to 299) list (Continued)

Error code	Control mode												Error cause	Error processing	Corrective action
	Positioning	Fixed-pitch feed	Speed	Speed/position switching	Speed switching	Constant-speed	JOG	Manual pulse generator	Home position return	Position follow-up control	OSC	Speed control with fixed position stop			
207	○				○	○	○			○			• The feed current value exceeded the stroke limit range during positioning control. Only the axis exceed the stroke limit range is stored at the circular/helical interpolation. All interpolation axes are stored in the linear interpolation.	Deceleration stop	• Correct the stroke limit range or travel value setting so that positioning control is within the range of the stroke limit.
208	○				○	○		○					• The feed current value of another axis exceeded the stroke limit value during the circular/helical interpolation control or simultaneous manual pulse generator operation. (For detection of other axis errors).		
209				○					○				• An overrun occurred because the setting travel value is less than the deceleration distance at the speed/position switching (CHANGE) signal input during speed/position switching control, or at the proximity dog signal input during home position return of count type.		• Set the speed setting so that overrun does not occur. • Set the travel value so that overrun does not occur.
210				○									• The setting travel value exceeded the stroke limit range at the speed/position switching (CHANGE) signal input during the speed/ position switching control.		• Correct the stroke limit range or setting travel value so that positioning control is within the range of stroke limit.
211						○							• During positioning control, an overrun occurred because the deceleration distance for the output speed is not attained at the point where the final positioning address was detected.		• Set the speed setting so that overrun does not occur. • Set the travel value so that overrun does not occur.
214								○					• The manual pulse generator was enabled during the start of the applicable axis, the manual pulse generator operation was executed.	Manual pulse generator input is ignored until the axis stops.	• Execute the manual pulse generator operation after the applicable axis stopped.

Table 1.5 Positioning control error (200 to 299) list (Continued)

Error code	Control mode												Error cause	Error processing	Corrective action
	Positioning	Fixed-pitch feed	Speed	Speed/position switching	Speed switching	Constant-speed	JOG	Manual pulse generator	Home position return	Position follow-up control	OSC	Speed control with fixed position stop			
215					○								• The speed switching point address exceed the end point address.	Rapid stop	• Set the speed-switching point between the previous speed switching point address and the end point address.
													• The positioning address in the reverse direction was set during the speed switching control.		
													• The same servo program was executed again.		• Correct the Motion SFC program.
220										○			• When the control unit is "degrees" during the position follow-up control, the command address exceeded the range of 0 to 35999999.	Decelera-tion stop (M2001+n OFF)	• When the control unit is "degree", set the command address within the range of 0 to 35999999.
													• The command address for the position follow-up control exceeded the stroke limit range.		• Set the address within the stroke limit range.
221												○	• During the speed control with fixed position stop, the setting address exceeded the range of 0 to 35999999 at the fixed position stop command device ON.		• Set the command address within the range of 0 to 35999999.
222												○	• During the speed control with fixed position stop, the fixed position acceleration/deceleration time is "0" at the fixed position acceleration/deceleration time input.	Control with the default value "1000".	• Set the acceleration/deceleration time within the range of 1 to 65535.
225						○							• The speed at the pass point exceeded the speed limit value during the constant-speed control.	Control with the speed limit value.	• Set the speed command value within the range of 1 to speed limit value.
230						○							• When the skip is executed in the constant-speed control, the next interpolation instruction is an absolute circular interpolation or absolute helical interpolation.	Immediate stop	• Execute the absolute linear interpolation after a point which make a skip.

(4) Current value/speed change errors (300 to 399)

These are errors detected at current value change or speed change.
The error codes, causes, processing and corrective actions are shown in Table 1.6.

Table 1.6 Current value/speed change error (300 to 399) list

Error code	Control mode												Error cause	Error processing	Corrective action
	Positioning	Fixed-pitch feed	Speed	Speed/position switching	Speed switching	Constant-speed	JOG	Manual pulse generator	Home position return	Position follow-up control	OSC	Speed control with fixed position stop			
300	○	○	○	○	○	○	○	○	○	○	○	○	• The current value was changed during positioning control of the applicable axis. • The current value was changed for the axis that had not been started. • The current value was changed for the servo OFF axis.	Current value is not changed.	• Use the following devices as interlocks not to change the current value for the applicable axis. (1) The start accept flag (M2001 to M2032) OFF for applicable axis. (2) The servo READY signal (M2415+20n) ON.
301									○				• The speed was changed for the axis during home position return.	Speed is not changed.	• Do not change speed during home position return.
302	○					○							• The speed was changed for the axis during circular interpolation.		• Do not change speed during circular interpolation.
305				○	○		○			○		○	• The speed after speed change is set outside the range of 0 to speed limit value.	Control with the speed limit value.	• Set the speed after speed change within the range of 0 to speed limit value.
	○	○	○			○							• The absolute value of speed after speed change is set outside the range of 0 to speed limit value.		• Set the absolute value of speed after speed change within the range of 0 to speed limit value.
309													• The current value was changed outside the range of 0 to 35999999 ($\times 10^{-5}$ [degrees]) for the degree axis.	Current value is not changed.	• Set the current value within the range of 0 to 35999999 ($\times 10^{-5}$[degree]).
310											○		• The speed was changed during high-speed oscillation. • The speed change to "0" was requested during high-speed oscillation.	Speed is not changed.	• Do not change speed during high-speed oscillation.
311													• The value outside the range of 1 to 1000[%] was set in the torque limit value change request (CHGT).	Torque limit value is not changed.	• Set the change request within the range of 1 to 1000[%].
312													• The torque limit value change request (CHGT) was made for the axis that had not been started.		• Request the change for the starting axis.

(5) System errors (900 to 999)

Table 1.7 System error (900 to 999) list

Error code	Control mode												Error cause	Error processing	Corrective action
	Positioning	Fixed-pitch feed	Speed	Speed/position switching	Speed switching	Constant-speed	JOG	Manual pulse generator	Home position return	Position follow-up control	OSC	Speed control with fixed positon stop			
901													• The motor travel value while the power is off exceeded the "System setting mode-allowable travel value during power off" set in the system settings at the turning on of the servo amplifier.	Further operation is possible.	• Check the position. • Check the battery of encoder.

APPENDIX 1.3 Major errors

These errors occur by control command from the external input signal or Motion SFC program, and the error codes 1000 to 1999 are used.
Major errors include the positioning control start errors, positioning control errors, absolute position system errors and system errors.

(1) Positioning control start errors (1000 to 1099)

These errors are detected at the positioning control start.
The error codes, causes, processing and corrective actions are shown in Table 1.8.

Table 1.8 Positioning control start error (1000 to 1099) list

Error code	Control mode												Error cause	Error processing	Corrective action
	Positioning	Fixed-pitch feed	Speed	Speed/position switching	Speed switching	Constant-speed	JOG	Manual pulse generator	Home position return	Position follow-up control	OSC	Speed control with fixed position stop			
1000	○	○	○	○	○	○	○	○	○	○	○	○	• The external STOP signal of the applicable axis turned on.	Positioning control does not start.	• Turn the STOP signal off.
1001	○	○	○	○	○	○	○	○	○	○	○	○	• The external signal FLS (upper limit LS) turned off at the forward direction (address increase direction) start.		• Move in the reverse direction by the JOG operation, etc. and set within the external limit range.
1002	○	○	○	○	○	○	○	○	○	○	○	○	• The external signal RLS (lower limit LS) turned off at the reverse direction (address decrease direction) start.		• Move in the forward direction by the JOG operation, etc. and set within the external limit range.
1003									○				• The external DOG (proximity dog) signal turned on at the home position return start of the proximity dog type.		• Perform the home position return after move to the proximity dog ON by the JOG operation, etc. at the home position return of the proximity dog type.
1004	○	○	○	○	○	○	○	○	○	○	○	○	• The applicable axis is not servo READY state. (M2415+20n: OFF). (1) The power supply of the servo amplifier is OFF. (2) During initial processing after turning on the servo amplifier. (3) The servo amplifier is not installed. (4) A servo error is occurred. (5) Cable fault. (6) Servo OFF command (M3215+20n) is ON.		• Wait until the servo READY state (M2415+20n: ON).
1005	○	○	○	○	○	○	○	○	○	○	○	○	• The servo error detection signal of the applicable axis (M2408+20n) turned on.		• Eliminate the servo error, reset the servo error detection signal (M2408+20n) by the servo error reset command (M3208+20n), then start operation.

(2) Positioning control errors (1100 to 1199)

These errors are detected at the positioning control.

The error codes, causes, processing and corrective actions are shown in Table 1.9.

Table 1.9 Positioning control error (1100 to 1199) list

Error code	Control mode												Error cause	Error processing	Corrective action
	Positioning	Fixed-pitch feed	Speed	Speed/position switching	Speed switching	Constant-speed	JOG	Manual pulse generator	Home position return	Position follow-up control	OSC	Speed control with fixed position stop			
1101	○	○	○	○	○	○	○	○	○	○	○	○	• The external signal FLS (upper limit LS) turned off during the forward direction (address increase direction).	Deceleration stop by "Stop processing on STOP input" of the parameter block.	• Travel in the reverse direction by the JOG operation, etc. and set within the external limit range.
1102	○	○	○	○	○	○	○	○	○	○	○	○	• The external signal RLS (lower limit LS) turned off during the reverse direction (address decrease direction).		• Travel in the forward direction by the JOG operation, etc. and set within the external limit range.
1103									○				• The external STOP signal (stop signal) turned on during home position return of proximity dog type.		• Perform the home position return after move to the proximity dog ON by the JOG operation, etc. at the home position return of the proximity dog type.
1104	○	○	○	○	○	○	○	○	○	○	○	○	• The servo error detection signal turned on during positioning control.	Immediate stop without deceleration.	• Start after disposal at the servo error.
1105	○	○	○	○	○	○	○	○	○	○	○	○	• The power supply of the servo amplifier turned off during positioning control. (Servo not installed status detection, cable fault, etc.) • Home position return did not complete normally without stop within the in-position range of home position at the home position return.	Turn the servo READY (M2415+20n) off.	• Turn on the power supply of the servo amplifier. • Check the connecting cable to the servo amplifier. • Make the gain adjustment.
1151	○						○	○		○	○	○	• Q172EX or encoder hardware error. • Disconnected encoder cable.	Immediate input stop	• Check (replace) the Q172EX or encoder. • Check the encoder cable.
													• A synchronous encoder set in the system setting differs from a synchronous encoder actually connected. • Q170ENC is connected to Q172EX/Q172EX-S1.	Input from synchronous encoder does not accept.	• Set a synchronous encoder actually connected in the system setting. • Use Q172EX/Q172EX-S1 to connect Q170ENC.

(3) Absolute position system errors (1200 to 1299)

These errors are detected at the absolute position system.
The error codes, causes, processing and corrective actions are shown in Table 1.10.

Table 1.10 Absolute position system error (1200 to 1299) list

Error code	Control mode												Error cause	Error processing	Corrective action
	Positioning	Fixed-pitch feed	Speed	Speed/position switching	Speed switching	Constant-speed	JOG	Manual pulse generator	Home position return	Position follow-up control	OSC	Speed control with fixed position stop			
1201													• A sum check error occurred with the backup data in the controller at the turning on servo amplifier power supply. • Home position return was not performed. • CPU module battery error. • Home position return started but did not complete normally.	Home position return request ON	• Check the battery and execute a home position return.
1202													• A communication error between the servo amplifier and encoder occurred at the turning on servo amplifier power supply.	Home position return request ON, servo error [2016] set. (Fully closed loop control servo amplifier use: Servo error [2070] is set.)	• Check the motor and encoder cables and execute a home position return again.
1203													• The amount of change in encoder current value is excessive during operation. A continual check is performed (both of servo ON and OFF states) after the servo amplifier power has been turned ON.	Home position return request ON	• Check the motor and encoder cables.
1204													• The following expression holds: "Encoder current value [PLS] ≠ feedback current value [PLS] (encoder effective bit number)" during operation. A continual check is performed (both of servo ON and OFF states) after the servo amplifier power has been turned on.		

(4) System errors (1300 to 1399)

These errors are detected at the power-on.

The error codes, causes, processing and corrective actions are shown in Table 1.11.

Table 1.11 System error (1300 to 1399) list

Error code	Control mode												Error cause	Error processing	Corrective action
	Positioning	Fixed-pitch feed	Speed	Speed/position switching	Speed switching	Constant-speed	JOG	Manual pulse generator	Home position return	Position follow-up control	OSC	Speed control with fixed position stop			
1310													• Initial communication with the Multiple CPU system did not complete normally. • Motion CPU fault.	Positioning control does not start.	• Replace the Motion CPU.

APPENDIX 1.4 Servo errors

(1) Servo amplifier errors (2000 to 2899)

These errors are detected by the servo amplifier, and the error codes are [2000] to [2899].

The servo error detection signal (M2408+20n) turns on at the servo amplifier error occurrence. Eliminate the error cause, reset the servo amplifier error by turning on the servo error reset command (M3208+20n) and perform re-start. (The servo error detection signal does not turn on because the codes [2100] to [2599] are for warnings.)

(Note-1): As for the regenerative alarm (error code [2030]) or overload 1 or 2 (error codes [2050], [2051]), the state at the operation is held also for after the protection circuit operation in the servo amplifier. The memory contents are cleared with the external power supply off, but are not cleared by the reset signal.

(Note-2): If resetting by turning off the external power supply is repeated at the occurrence of error code [2030], [2050] or [2051], it may cause devices to be destroyed by overheating. Re-start operation after eliminating the cause of the error certainly.

Details of servo errors are shown in Table 1.12.

⚠ CAUTION
● If a controller, servo amplifier self-diagnosis error occurs, check the points stated in this manual and clear the error.

Table 1.12 Servo error (2000 to 2899) list

Error code	Error cause		Error check	Error processing	Corrective action
	Name	Description			
2010	Undervoltage	• Power supply voltage is low. MR-J3-□B: 160VAC or less MR-J3-□B1: 83 VAC or less MR-J3-□B4: 280 VAC or less	Any time during operation	Immediate stop	• Review the power supply.
		• There was an instantaneous control power failure of 60[ms] or longer.			
		• Shortage of power supply capacity caused the power supply voltage to drop at start, etc.			
		• The bus voltage dropped to the following value or less. MR-J3-□B: 200VDC MR-J3-□B1: 158VDC MR-J3-□B4: 380VDC			
		• Faulty parts in the servo amplifier [Checking method] Servo error [2010] occurs if power is switched on after disconnection of all cables but the control circuit power supply cables.			• Replace the servo amplifier.
2012	Memory error 1 (RAM)	• Faulty parts in the servo amplifier (RAM memory error) [Checking method] Servo error [2012] occurs if power is switched on after disconnection of all cables but the control circuit power supply cables.	• Servo amplifier power on. • Multiple CPU system power on.		• Replace the servo amplifier.
2013	Clock error	• Faulty parts in the servo amplifier (Printed board fault) [Checking method] Servo error [2013] occurs if power is switched on after disconnection of all cables but the control circuit power supply cables.	Any time during operation		• Replace the servo amplifier.
		• Faulty the controller (Clock error transmitted from the controller) [Checking method] Servo error [2013] occurs if Motion CPU is used in the Multiple CPU system.			• Replace the Motion CPU.
2014	CPU Watchdog	• Faulty hardware of servo amplifier			• Replace the servo amplifier.
2015	Memory error 2 (EEP-ROM)	• Faulty parts in the servo amplifier (EEP-ROM fault) [Checking method] Servo error [2015] occurs if power is switched on after disconnection of all cables but the control circuit power supply cables.	• Servo amplifier power on. • Multiple CPU system power on.		
		• The number of write times to EEP-ROM exceeded 100,000.			

Table 1.12 Servo error (2000 to 2899) list (Continued)

Error code	Error cause		Error check	Error processing	Corrective action
	Name	Description			
2016	Encoder error 1 (At power on)	• Encoder connector (CN2) disconnected. • Encoder fault • Encoder cable faulty (Wire breakage or shorted) • Encoder cable type (2-wire, 4-wire) selection was wrong in parameter setting.	• Servo amplifier power on. • Multiple CPU system power on.	Immediate stop	• Connect correctly. • Replace the servomotor. • Repair or replace the cable. • Set the correct encoder type of servo parameter.
2017	Board error	• Faulty parts in the servo amplifier (CPU/parts fault) [Checking method] Servo error [2017] occurs if power is switched on after disconnection of all cables but the control circuit power supply cables.			• Replace the servo amplifier.
2019	Memory error 3 (Flash ROM)	• Faulty parts in the servo amplifier (ROM memory fault) [Checking method] Servo error [2019] occurs if power is switched on after disconnection of all cables but the control circuit power supply cables.			
2020	Encoder error 2	• Encoder connector (CN2) disconnected. • Encoder fault • Encoder cable faulty (Wire breakage or shorted)	Any time during operation		• Connect correctly. • Replace the servomotor. • Repair or replace the cable.
2024	Main circuit error	• Power input wires and servomotor power wires are in contact. [Checking method] Servo error [2024] occurs if servo is switched on after disconnecting the U, V and W power cables from the servo amplifier. • Sheathes of servomotor power cables deteriorated, resulting in ground fault. • Main circuit of servo amplifier failed.			• Correct the wiring. • Replace the cable. • Replace the servo amplifier.
2025	Absolute position erase	• Voltage drop in encoder (Battery of servo amplifier disconnected.) • Battery voltage low • Battery cable or battery is faulty. • Home position return not set. (Power was switched on for the first time in the absolute position detection system.)	• Servo amplifier power on. • Multiple CPU system power on.	Immediate stop Home position return request ON	• After leaving the servo error [2025] occurring for a few minutes, switch power off, then on again. Always make home position return again. • Replace the battery. Always make home position return again. • After leaving the servo error [2025] occurring for a few minutes, switch power off, then on again. Always make home position return again.

Table 1.12 Servo error (2000 to 2899) list (Continued)

Error code	Error cause		Error check	Error processing	Corrective action
	Name	Description			
2027	Initial magnetic pole detection error	• Machine struck.	• Servo amplifier power on. • Multiple CPU system power on.	Immediate stop	• Check the machine.
		• Accuracy at initial magnetic pole detection is bad.			• Review the parameter No.PS09 setting (magnetic pole detection voltage level).
		• Wrong wiring of the servomotor wires (U, V, and W).			• Correct the wiring.
		• Linear encoder resolution differs from the setting value.			• Review the parameter No.PS02 and PS03 setting (linear encoder resolution). • Check the installation of linear encoder.
		• Mismatch of the linear encoder installation direction.			• Check the installation direction of linear encoder.
		• Magnetic pole detection limit switch is not on.			• Connect the magnetic detection limit switch correctly. • Set the limit switch to forced ON by the parameter No.PD02 setting. (When the amplifier input is used in the Motion CPU, do not set to forced ON since it is shared with the input signal.)
2028	Linear encoder error 2	• The temperature of linear encoder is high.	Any time during operation		• Check the temperature of linear encoder and contact with the linear encoder manufacturer.
		• The signal level of linear encoder has dropped.			• Check the installation of linear encoder.

Table 1.12 Servo error (2000 to 2899) list (Continued)

Error code	Error cause		Error check	Error processing	Corrective action
	Name	Description			
2030	Regenerative alarm	• Wrong setting of system setting (regenerative brake)	Any time during operation	Immediate stop	• Check the regenerative brake of system setting and set correctly.
		• Built-in regenerative brake resistor or regenerative brake option is not connected.			• Connect correctly.
		• High-duty operation or continuous regenerative operation caused the permissible regenerative power of the regenerative brake option to be exceeded. [Checking method] Call the servo monitor and check the regenerative level.			• Reduce the frequency of positioning. (Call the regenerative level [%] of servo monitor and reduce the frequency of acceleration/deceleration or feed speed.) • Use the regenerative brake option of larger capacity. • Reduce the load.
		• Power supply voltage is abnormal. MR-J3-□B: 260VAC or more MR-J3-□B1: More than 135VAC MR-J3-□B4: 535VAC or more			• Review the power supply
		• Built-in regenerative brake resistor or regenerative brake option faulty.			• Replace the servo amplifier or regenerative brake option..
		• Regenerative transistor faulty. [Checking method] • The regenerative brake option has overheated abnormally. • Servo error [2030] occurs even after removal of the built-in regenerative brake resistor or regenerative brake option.			• Replace the servo amplifier.
2031	Overspeed	• Command speed is too high. (Motor speed has exceeded the instantaneous permissible speed.)			• Check the servo program or mechanical system program, and set correctly.
		• Small acceleration/deceleration time constant caused overshoot to be large.			• If an overshoot occurs during acceleration/deceleration, check the acceleration/deceleration time in the fixed parameters.
		• Servo system is instable to cause overshoot.			• Re-set servo gain to proper value. • If servo gain cannot be set to proper value: 1) Reduce load inertia moment ratio; or 2) Reexamine acceleration/ deceleration time constant.
		• Electronic gear ratio is high.			• Set correctly.(Check if the number of pulses per revolution and travel value per revolution in the fixed parameters match the machine system.
		• Encoder faulty.			• Replace the servomotor.

Table 1.12 Servo error (2000 to 2899) list (Continued)

Error code	Error cause		Error check	Error processing	Corrective action
	Name	Description			
2032	Overcurrent	• Short occurred in servomotor power (U, V, W).	Any time during operation	Immediate stop	• Correct the wiring.
		• Transistor (IPM) of the servo amplifier faulty. [Checking method] Servo error [2032] occurs if power is switched on after U, V and W are disconnected.			• Replace the servo amplifier.
		• Ground fault occurred in servomotor power (U, V, W).			• Correct the wiring.
		• External noise caused the overcurrent detection circuit to misoperate.			• Take noise suppression measures.
2033	Overvoltage	• Lead of built-in regenerative brake resistor or regenerative brake option is open or disconnected.			• Replace the lead. • Connect correctly.
		• Regenerative transistor faulty.			• Replace the servo amplifier.
		• Wire breakage of built-in regenerative brake resistor or regenerative brake option.			• For wire breakage of built-in regenerative brake resistor, replace the servo amplifier. • For wire breakage of regenerative brake option, replace the regenerative brake option.
		• Capacity of built-in regenerative brake resistor or regenerative brake option is insufficient.			• Add regenerative brake option or increase capacity.
		• Power supply voltage is high.			• Review the power supply.
		• Ground fault occurred in servomotor power (U, V, W).			• Correct the wiring.
2034	Communica-tions error	• Data received from the Motion CPU faulty.			• Check the connection of SSCNETⅢ cable. • Check if there is a disconnection in the SSCNETⅢ cable.
2035	Command frequency error	• There is excessive variation in the position commands and command speed is too high from the Motion CPU.			• Check the command speed and the number of pulses per revolution/travel value per revolution of the fixed parameters.
		• Noise entered the commands from the Motion CPU.			• Check the connection of SSCNETⅢ cable. • Check if there is a disconnection in the SSCNETⅢ cable. • Check if any relays or solenoids are operating in the vicinity.
		• Motion CPU failure			• Replace the Motion CPU.
2036	Transmission error	• Fault in communication with the Motion CPU.			• Check the connection of SSCNETⅢ cable. • Check if there is a disconnection in the SSCNETⅢ cable.

Table 1.12 Servo error (2000 to 2899) list (Continued)

Error code	Error cause		Error check	Error processing	Corrective action
	Name	Description			
2042	Linear servo control error (Linear servo amplifier)	• Linear encoder signal resolution diffes from the setting value.	• Servo amplifier power on. • Multiple CPU system power on.	Immediate stop	• Review the settings of parameter No.PS02 and PS03 setting (linear encoder resolution). • Check the installation of linear encoder.
		• Initial magnetic pole detection has not been performed.			• Perform initial magnetic pole detection.
		• Mismatch of the linear encoder installation direction.			• Check the installation direction of linear encoder. • Review the setting of parameter No. PC27 (encoder pulse count polarity).
		• Wrong wiring of the servomotor wires (U, V, and W).			• Correct the wiring.
		• The position deviation exceeded the detection level.			• Review the operation condition. • Review the setting of parameter No.PS05 (Linear servo control position deviation error detection level) as required.
		• The speed deviation exceeded the detection level.			• Review the operation condition. • Review the setting of parameter No.PS06 (Linear servo control speed deviation error detection level) as required.
		• The thrust deviation exceeded the detection level.			• Review the operation condition. • Review the setting of parameter No.PS07 (Linear servo control thrust deviation error detection level) as required.
2042	Fully closed control error (Fully closed loop control servo amplifier)	• Load side encoder resolution differs from the setting value.			• Review the settings of parameter No.PE04 and PE05 (Fully closed loop control feedback pulse electronic gear). • Check the installation of load side encoder.
		• Mismatch of the load side encoder installation direction.			• Check the installation direction of load side encoder. • Review the setting of parameter No. PC27 (encoder pulse count polarity).
		• The position deviation exceeded the detection level.			• Review the operation condition. • Review the setting of parameter No.PE07 (Fully closed loop control position deviation error detection level) as required.
		• The speed deviation exceeded the detection level.			• Review the operation condition. • Review the setting of parameter No. PE06 (Fully closed loop control speed deviation error detection level) as required.

Table 1.12 Servo error (2000 to 2899) list (Continued)

Error code	Error cause		Error check	Error processing	Corrective action
	Name	Description			
2045	Main circuit device overheat	• Servo amplifier failure	Any time during operation	Immediate stop	• Replace the servo amplifier.
		• The power supply was turned on and off continuously by overloaded status.			• The drive method is reviewed.
		• Ambient temperature of servo amplifier is over 55[°C] (131[°F]).			• Review environment so that ambient temperature is 0 to 55[°C] (32 to 131[°F]).
		• Used beyond the specifications of close mounting of servo amplifier.			• Use within the range of specifications.
2046	Servomotor overheat	• Ambient temperature of servomotor is over 40[°C] (104[°F]).			• Review environment so that ambient temperature is 0 to 40[°C] (32 to 104[°F]).
		• Servomotor is overloaded.			• Reduce load. • Review operation pattern. • Use servomotor that provides larger output.
		• Thermal sensor in encoder is faulty.			• Replace the servomotor.
2047	Cooling fan alarm	• Cooling fan life expiration			• Replace the cooling fan of the servo amplifier.
		• Foreign matter caught in the fan stopped rotation.			• Remove the foreign matter.
		• The power supply of the cooling fan failed.			• Replace the servo amplifier.
2050	Overload 1	• Servo amplifier is used in excess of its continuous output current.			• Reduce load. • Review operation pattern. • Use servomotor that provides larger output.
		• Servo system is instable and hunting.			• Repeat acceleration/ deceleration to execute auto tuning. • Change auto tuning response setting. • Set auto tuning to OFF and make gain adjustment manually.
		• Machine struck something.			• Review operation pattern. • Install limit switches.
		• Wrong connection of servo motor. (Servo amplifier's output terminals U, V, W do not match servo motor's input terminals U, V, W.)			• Connect correctly.
		• Encoder faulty. [Checking method] When the servomotor shaft is rotated with the servo off, the cumulative feedback pulses do not vary in proportion to the rotary angle of the shaft but the indication skips or returns midway.			• Replace the servomotor.

Table 1.12 Servo error (2000 to 2899) list (Continued)

Error code	Error cause		Error check	Error processing	Corrective action
	Name	Description			
2051	Overload 2	• Machine struck something.	Any time during operation	Immediate stop	• Review operation pattern. • Install limit switches.
		• Wrong connection of servomotor. (Servo amplifier's output terminals U, V, W do not match servo motor's input terminals U, V, W.)			• Connect correctly.
		• Servo system is instable and hunting.			`• Repeat acceleration/ deceleration to execute auto tuning. • Change auto tuning response setting. • Set auto tuning to OFF and make gain adjustment manually.
		• Encoder faulty. [Checking method] When the servomotor shaft is rotated with the servo off, the cumulative feedback pulses do not vary in proportion to the rotary angle of the shaft but the indication skips or returns midway.			• Replace the servomotor.
2052	Error excessive	• Acceleration/deceleration time constant is too small.			• Increase the acceleration/deceleration time.
		• Torque limit value is too small.			• Increase the torque limit value.
		• Motor cannot be started due to torque shortage caused by power supply voltage drop.			• Review the power supply capacity. • Use servomotor which provides larger output.
		• Model loop gain value of servo parameter is small.			• Increase set value and adjust to ensure proper operation.
		• Servomotor shaft was rotated by external force.			• When torque is limited, increase the limit value. • Reduce load. • Use servomotor that provides larger output.
		• Machine struck something.			• Review operation pattern. • Install limit switches.
		• Encoder faulty			• Replace the servomotor.
		• Wrong connection of servomotor. (Servo amplifier's output terminals U, V, W do not match servomotor's input terminals U, V, W.)			• Connect correctly.
2060 (AL.1A)	Motor combination error	• Fault in combination with the servo amplifier and servomotor.	• Servo amplifier power on. • Multiple CPU system power on.		• Use the correct combination with the servo amplifier and servomotor.

Table 1.12 Servo error (2000 to 2899) list (Continued)

Error code	Error cause		Error check	Error processing	Corrective action
	Name	Description			
2061 (AL.2A)	Linear encoder error 1	• The speed of linear encoder has exceeded the range of use. • Noise entered. • Alarm of the linear encoder. • Defective installation positions of the scale and head.	Any time during operation	Immediate stop	• Change the speed of linear encoder within the range of use. • Take the noise reduction measures. • Contact with the linear encoder manufacturer. • Adjust the positions of the scale and head.
2070	Load side encoder error 1	• The connector CN2L is disconnected. • Faulty of the load side encoder cable • Wrong wiring of the load side encoder cable • The load side encoder cable type (2-wire, 4-wire) selection was wrong in the parameter setting. • The startup timing is slow. (For the load side encoder with the external power supply input)	• Servo amplifier power on. • Multiple CPU system power on.		• Connect correctly. • Repair or change the cable. • Review the wiring connection. • Correct the setting in the fourth digit of parameter No. PC26 encoder cable communication system selection). • Make the startup timing of the external power supply fast.
2071	Load side encoder error 2	• Faulty of the load side encoder cable • Wrong wiring of the load side encoder cable • The power supply voltage dropped. (For the load side encoder with the external power supply input)			• Repair or change the cable. • Review the wiring connection. • Check the power supply capacity and voltage.
2088 (88)	Watchdog	• CPU, parts faulty	Any time during operation		• Replace the servo amplifier.
2102 (AL.92)	Open battery cable warning	• Bttery cable for absolute position detection system is open. • Voltage of battery for absolute position detection system supplied fell to about 3V or less. (Detected with the encoder.)		Operation continues	• Repair the cable or replace the battery. • Replace the battery.
2106 (AL.96)	Home position setting warning	• After home position return, droop pulses remaining are greater than the in-position range setting. • Creep speed is high.			• Re-try the home position return. • Reduce the creep speed.
2116 (AL.9F)	Battery warning	• Voltage of battery for absolute position detection system installed to servo amplifier fell to 3.2V or less. (Detected with the servo amplifier.)			• Replace the battery.
2140 (AL.E0)	Excessive regenerative warning	• There is a possibility that regenerative alarm [2030] may occur. (Detected 85[%] regenerative level of the maximum load capacity for the regenerative register.)			• Refer to the details on the regenerative alarm [2030].
2141 (AL.E1)	Overload warning 1	• There is a possibility that overload alarm [2050], [2051] may occur. (Detected 85[%] overload level.)			• Refer to the details on the overload alarm [2050], [2051].

Table 1.12 Servo error (2000 to 2899) list (Continued)

Error code	Error cause		Error check	Error processing	Corrective action
	Name	Description			
2142 (AL.E2)	Servo motor overheat warning	• Ambient temperature of servomotor is over 40[°C] (104[°F]). • Servomotor is overloaded. • Thermistor in encoder is faulty.	Any time during operation	Operation continues	• Review environment so that ambient temperature is 0 to 49[°C] (32 to 104[°F]). • Reduce load. • Review operation pattern. • Use servomotor that provides larger output. • Replace the servomotor.
2143 (AL.E3)	Absolute position counter warning	• Absolute position encoder pulses faulty.		Operation continues Home position return request ON	• Take noise suppression measures. • Replace the servomotor. • Execute the home position return after measures.
2146 (AL.E6)	Servo forced stop warning	• Servo amplifier are forced stop state. (Servo amplifier input signal EM1 is OFF.)		Immediate stop	• Ensure safety and deactivate forced stop.
2147 (AL.E7)	Controller forced stop warning	• A forced stop signal is input from the Motion CPU			• Ensure safety and deactivate forced stop.
2148 (AL.E8)	Cooling fan speed reduction warning	• Cooling fan life expiration • The power supply of the cooling fan is broken.		Operation continues	• Replace the cooling fan of servo amplifier. • Replace the servo amplifier. • Replace the cooling fan of servo amplifier.
2149 (AL.E9)	Main circuit off warning	• Servo-on signal was turned on with main circuit power off.			• Switch on the main circuit power.
2152 (AL.EC)	Overload warning 2	• During a stop, the status in which a current flew intensively in any of the U, V and W phases of the servomotor occurred repeatedly, exceeding the warning level.			• Reduce the positioning frequency at the specific positioning address. • Reduce the load. • Replace the servo amplifier/ servomotor with the one of larger capacity.
2153 (AL.ED)	Output watt excess warning	• Continuous operation was performed with the output wattage (speed × torque) of the servomotor exceeding 150[%] of the rated output.			• Reduce the servomotor speed. • Reduce the load.

Table 1.12 Servo error (2000 to 2899) list (Continued)

<table>
<tr><th rowspan="2">Error code</th><th colspan="2">Error cause</th><th rowspan="2">Error check</th><th rowspan="2">Error processing</th><th rowspan="2">Corrective action</th></tr>
<tr><th>Name</th><th>Description</th></tr>
<tr><td>2301
to
2599</td><td>Parameter error</td><td>Parameter error
• The servo parameter value is outside the setting range. (Any unauthorized parameter is ignored and the value before setting is held.)
<table>
<tr><th>Error code</th><th>Parameter No.</th><th>Name</th></tr>
<tr><td>2301</td><td>PA01</td><td>For manufacturer setting</td></tr>
<tr><td>2302</td><td>PA02</td><td>Regenerative brake option</td></tr>
<tr><td>2303</td><td>PA03</td><td>Absolute position detection system</td></tr>
<tr><td>2304</td><td>PA04</td><td>Function selection A-1</td></tr>
<tr><td>2305</td><td>PA05</td><td>For manufacturer setting</td></tr>
<tr><td>2306</td><td>PA06</td><td>For manufacturer setting</td></tr>
<tr><td>2307</td><td>PA07</td><td>For manufacturer setting</td></tr>
<tr><td>2308</td><td>PA08</td><td>Auto tuning mode</td></tr>
<tr><td>2309</td><td>PA09</td><td>Auto tuning response</td></tr>
<tr><td>2310</td><td>PA10</td><td>In-position range</td></tr>
<tr><td>2311</td><td>PA11</td><td>For manufacturer setting</td></tr>
<tr><td>2312</td><td>PA12</td><td>For manufacturer setting</td></tr>
<tr><td>2313</td><td>PA13</td><td>For manufacturer setting</td></tr>
<tr><td>2314</td><td>PA14</td><td>Rotation direction selection</td></tr>
<tr><td>2315</td><td>PA15</td><td>Encoder output pulse</td></tr>
<tr><td>2316</td><td>PA16</td><td>For manufacturer setting</td></tr>
<tr><td>2317</td><td>PA17</td><td>For manufacturer setting</td></tr>
<tr><td>2318</td><td>PA18</td><td>For manufacturer setting</td></tr>
<tr><td>2319</td><td>PA19</td><td>Parameter write inhibit</td></tr>
<tr><td>2320</td><td>PB01</td><td>Adaptive tuning mode</td></tr>
<tr><td>2321</td><td>PB02</td><td>Vibration suppression control filter tuning mode</td></tr>
<tr><td>2322</td><td>PB03</td><td>For manufacturer setting</td></tr>
<tr><td>2323</td><td>PB04</td><td>Feed forward gain</td></tr>
<tr><td>2324</td><td>PB05</td><td>For manufacturer setting</td></tr>
<tr><td>2325</td><td>PB06</td><td>Ratio of load inertia moment to servo motor inertia moment</td></tr>
<tr><td>2326</td><td>PB07</td><td>Model loop gain</td></tr>
<tr><td>2327</td><td>PB08</td><td>Position loop gain</td></tr>
<tr><td>2328</td><td>PB09</td><td>Speed loop gain</td></tr>
<tr><td>2329</td><td>PB10</td><td>Speed integral compensation</td></tr>
<tr><td>2330</td><td>PB11</td><td>Speed differential compensation</td></tr>
<tr><td>2331</td><td>PB12</td><td>For manufacturer setting</td></tr>
<tr><td>2332</td><td>PB13</td><td>Machine resonance suppression filter 1</td></tr>
<tr><td>2333</td><td>PB14</td><td>Notch form selection 1</td></tr>
<tr><td>2334</td><td>PB15</td><td>Machine resonance suppression filter 2</td></tr>
<tr><td>2335</td><td>PB16</td><td>Notch form selection 2</td></tr>
</table></td><td>Any time during operation</td><td>Operation continues</td><td>• Check the setting ranges of the servo parameters.</td></tr>
</table>

Table 1.12 Servo error (2000 to 2899) list (Continued)

<table>
<tr><th rowspan="2">Error code</th><th colspan="2">Error cause</th><th rowspan="2">Error check</th><th rowspan="2">Error processing</th><th rowspan="2">Corrective action</th></tr>
<tr><th>Name</th><th>Description</th></tr>
<tr><td>2301
to
2599</td><td>Parameter error</td><td>
<table>
<tr><th>Error code</th><th>Parameter No.</th><th>Name</th></tr>
<tr><td>2336</td><td>PB17</td><td>For manufacturer setting</td></tr>
<tr><td>2337</td><td>PB18</td><td>Low-pass filter</td></tr>
<tr><td>2338</td><td>PB19</td><td>Vibration suppression control vibration frequency setting</td></tr>
<tr><td>2339</td><td>PB20</td><td>Vibration suppression control resonance frequency setting</td></tr>
<tr><td>2340</td><td>PB21</td><td>For manufacturer setting</td></tr>
<tr><td>2341</td><td>PB22</td><td>For manufacturer setting</td></tr>
<tr><td>2342</td><td>PB23</td><td>Low-pass filter selection</td></tr>
<tr><td>2343</td><td>PB24</td><td>Slight vibration suppression control selection</td></tr>
<tr><td>2344</td><td>PB25</td><td>For manufacturer setting</td></tr>
<tr><td>2345</td><td>PB26</td><td>Gain changing selection</td></tr>
<tr><td>2346</td><td>PB27</td><td>Gain changing condition</td></tr>
<tr><td>2347</td><td>PB28</td><td>Gain changing time constant</td></tr>
<tr><td>2348</td><td>PB29</td><td>Gain changing ratio of load inertia moment to servo motor inertia moment</td></tr>
<tr><td>2349</td><td>PB30</td><td>Gain changing position loop gain</td></tr>
<tr><td>2350</td><td>PB31</td><td>Gain changing speed loop gain</td></tr>
<tr><td>2351</td><td>PB32</td><td>Gain changing speed integral compensation</td></tr>
<tr><td>2352</td><td>PB33</td><td>Gain changing vibration suppression control vibration frequency setting</td></tr>
<tr><td>2353</td><td>PB34</td><td>Gain changing vibration suppression control resonance frequency setting</td></tr>
<tr><td>2354</td><td>PB35</td><td>For manufacturer setting</td></tr>
<tr><td>2355</td><td>PB36</td><td>For manufacturer setting</td></tr>
<tr><td>2356</td><td>PB37</td><td>For manufacturer setting</td></tr>
<tr><td>2357</td><td>PB38</td><td>For manufacturer setting</td></tr>
<tr><td>2358</td><td>PB39</td><td>For manufacturer setting</td></tr>
<tr><td>2359</td><td>PB40</td><td>For manufacturer setting</td></tr>
<tr><td>2360</td><td>PB41</td><td>For manufacturer setting</td></tr>
<tr><td>2361</td><td>PB42</td><td>For manufacturer setting</td></tr>
<tr><td>2362</td><td>PB43</td><td>For manufacturer setting</td></tr>
<tr><td>2363</td><td>PB44</td><td>For manufacturer setting</td></tr>
<tr><td>2364</td><td>PB45</td><td>For manufacturer setting</td></tr>
<tr><td>2365</td><td>PC01</td><td>Error excessive alarm level</td></tr>
<tr><td>2366</td><td>PC02</td><td>Electromagnetic brake sequence output</td></tr>
</table>
</td><td>Any time during operation</td><td>Operation continues</td><td>• Check the setting ranges of the servo parameters.</td></tr>
</table>

Table 1.12 Servo error (2000 to 2899) list (Continued)

<table>
<tr><th rowspan="2">Error code</th><th colspan="2">Error cause</th><th rowspan="2">Error check</th><th rowspan="2">Error processing</th><th rowspan="2">Corrective action</th></tr>
<tr><th>Name</th><th>Description</th></tr>
<tr><td>2301
to
2599</td><td>Parameter error</td><td>
<table>
<tr><th>Error code</th><th>Parameter No.</th><th>Name</th></tr>
<tr><td>2367</td><td>PC03</td><td>Encoder output pulses selection</td></tr>
<tr><td>2368</td><td>PC04</td><td>Function selection C-1</td></tr>
<tr><td>2369</td><td>PC05</td><td>Function selection C-2</td></tr>
<tr><td>2370</td><td>PC06</td><td>For manufacturer setting</td></tr>
<tr><td>2371</td><td>PC07</td><td>Zero speed</td></tr>
<tr><td>2372</td><td>PC08</td><td>For manufacturer setting</td></tr>
<tr><td>2373</td><td>PC09</td><td>Analog monitor output 1</td></tr>
<tr><td>2374</td><td>PC10</td><td>Analog monitor output 2</td></tr>
<tr><td>2375</td><td>PC11</td><td>Analog monitor 1 offset</td></tr>
<tr><td>2376</td><td>PC12</td><td>Analog monitor 2 offset</td></tr>
<tr><td>2377</td><td>PC13</td><td>For manufacturer setting</td></tr>
<tr><td>2378</td><td>PC14</td><td>For manufacturer setting</td></tr>
<tr><td>2379</td><td>PC15</td><td>For manufacturer setting</td></tr>
<tr><td>2380</td><td>PC16</td><td>For manufacturer setting</td></tr>
<tr><td>2381</td><td>PC17</td><td>Function selection C-4</td></tr>
<tr><td>2382</td><td>PC18</td><td>For manufacturer setting</td></tr>
<tr><td>2383</td><td>PC19</td><td>For manufacturer setting</td></tr>
<tr><td>2384</td><td>PC20</td><td>For manufacturer setting</td></tr>
<tr><td>2385</td><td>PC21</td><td>Alarm history clear</td></tr>
<tr><td>2386</td><td>PC22</td><td>For manufacturer setting</td></tr>
<tr><td>2387</td><td>PC23</td><td>For manufacturer setting</td></tr>
<tr><td>2388</td><td>PC24</td><td>For manufacturer setting</td></tr>
<tr><td>2389</td><td>PC25</td><td>For manufacturer setting</td></tr>
<tr><td>2390</td><td>PC26</td><td>For manufacturer setting</td></tr>
<tr><td>2391</td><td>PC27</td><td>For manufacturer setting</td></tr>
<tr><td>2392</td><td>PC28</td><td>For manufacturer setting</td></tr>
<tr><td>2393</td><td>PC29</td><td>For manufacturer setting</td></tr>
<tr><td>2394</td><td>PC30</td><td>For manufacturer setting</td></tr>
<tr><td>2395</td><td>PC31</td><td>For manufacturer setting</td></tr>
<tr><td>2396</td><td>PC32</td><td>For manufacturer setting</td></tr>
<tr><td>2397</td><td>PD01</td><td>For manufacturer setting</td></tr>
<tr><td>2398</td><td>PD02</td><td>For manufacturer setting</td></tr>
<tr><td>2399</td><td>PD03</td><td>For manufacturer setting</td></tr>
<tr><td>2400</td><td>PD04</td><td>For manufacturer setting</td></tr>
<tr><td>2401</td><td>PD05</td><td>For manufacturer setting</td></tr>
<tr><td>2402</td><td>PD06</td><td>For manufacturer setting</td></tr>
<tr><td>2403</td><td>PD07</td><td>Output signal device selection 1</td></tr>
<tr><td>2404</td><td>PD08</td><td>Output signal device selection 2</td></tr>
<tr><td>2405</td><td>PD09</td><td>Output signal device selection 3</td></tr>
<tr><td>2406</td><td>PD10</td><td>For manufacturer setting</td></tr>
</table>
</td><td>Any time during operation</td><td>Operation continues</td><td>• Check the setting ranges of the servo parameters.</td></tr>
</table>

Table 1.12 Servo error (2000 to 2899) list (Continued)

<table>
<tr><th rowspan="2">Error code</th><th colspan="2">Error cause</th><th rowspan="2">Error check</th><th rowspan="2">Error processing</th><th rowspan="2">Corrective action</th></tr>
<tr><th>Name</th><th>Description</th></tr>
<tr><td>2301 to 2599</td><td>Parameter error</td><td>
<table>
<tr><th>Error code</th><th>Parameter No.</th><th>Name</th></tr>
<tr><td>2407</td><td>PD11</td><td>Input filter setting</td></tr>
<tr><td>2408</td><td>PD12</td><td>For manufacturer setting</td></tr>
<tr><td>2409</td><td>PD13</td><td>For manufacturer setting</td></tr>
<tr><td>2410</td><td>PD14</td><td>Function selection D-3</td></tr>
<tr><td>2411</td><td>PD15</td><td>For manufacturer setting</td></tr>
<tr><td>2412</td><td>PD16</td><td>For manufacturer setting</td></tr>
<tr><td>2413</td><td>PD17</td><td>For manufacturer setting</td></tr>
<tr><td>2414</td><td>PD18</td><td>For manufacturer setting</td></tr>
<tr><td>2415</td><td>PD19</td><td>For manufacturer setting</td></tr>
<tr><td>2416</td><td>PD20</td><td>For manufacturer setting</td></tr>
<tr><td>2417</td><td>PD21</td><td>For manufacturer setting</td></tr>
<tr><td>2418</td><td>PD22</td><td>For manufacturer setting</td></tr>
<tr><td>2419</td><td>PD23</td><td>For manufacturer setting</td></tr>
<tr><td>2420</td><td>PD24</td><td>For manufacturer setting</td></tr>
<tr><td>2421</td><td>PD25</td><td>For manufacturer setting</td></tr>
<tr><td>2422</td><td>PD26</td><td>For manufacturer setting</td></tr>
<tr><td>2423</td><td>PD27</td><td>For manufacturer setting</td></tr>
<tr><td>2424</td><td>PD28</td><td>For manufacturer setting</td></tr>
<tr><td>2425</td><td>PD29</td><td>For manufacturer setting</td></tr>
<tr><td>2426</td><td>PD30</td><td>For manufacturer setting</td></tr>
<tr><td>2427</td><td>PD31</td><td>For manufacturer setting</td></tr>
<tr><td>2428</td><td>PD32</td><td>For manufacturer setting</td></tr>
</table>
</td><td>Any time during operation</td><td>Operation continues</td><td>• Check the setting ranges of the servo parameters.</td></tr>
</table>

Table 1.12 Servo error (2000 to 2899) list (Continued)

<table>
<tr><th rowspan="2">Error code</th><th colspan="2">Error cause</th><th rowspan="2">Error check</th><th rowspan="2">Error processing</th><th rowspan="2">Corrective action</th></tr>
<tr><th>Name</th><th>Description</th></tr>
<tr><td>2601
to
2899</td><td>Initial parameter error</td><td>Initial parameter error
• The parameter setting is wrong.
• The parameter data was corrupted.
<table><tr><th>Error code</th><th>Parameter No.</th><th>Name</th></tr><tr><td>2601</td><td>PA01</td><td>For manufacturer setting</td></tr><tr><td>2602</td><td>PA02</td><td>Regenerative brake option</td></tr><tr><td>2603</td><td>PA03</td><td>Absolute position detection system</td></tr><tr><td>2604</td><td>PA04</td><td>Function selection A-1</td></tr><tr><td>2605</td><td>PA05</td><td>For manufacturer setting</td></tr><tr><td>2606</td><td>PA06</td><td>For manufacturer setting</td></tr><tr><td>2607</td><td>PA07</td><td>For manufacturer setting</td></tr><tr><td>2608</td><td>PA08</td><td>Auto tuning mode</td></tr><tr><td>2609</td><td>PA09</td><td>Auto tuning response</td></tr><tr><td>2610</td><td>PA10</td><td>In-position range</td></tr><tr><td>2611</td><td>PA11</td><td>For manufacturer setting</td></tr><tr><td>2612</td><td>PA12</td><td>For manufacturer setting</td></tr><tr><td>2613</td><td>PA13</td><td>For manufacturer setting</td></tr><tr><td>2614</td><td>PA14</td><td>Rotation direction selection</td></tr><tr><td>2615</td><td>PA15</td><td>Encoder output pulse</td></tr><tr><td>2616</td><td>PA16</td><td>For manufacturer setting</td></tr><tr><td>2617</td><td>PA17</td><td>For manufacturer setting</td></tr><tr><td>2618</td><td>PA18</td><td>For manufacturer setting</td></tr><tr><td>2619</td><td>PA19</td><td>Parameter write inhibit</td></tr><tr><td>2620</td><td>PB01</td><td>Adaptive tuning mode</td></tr><tr><td>2621</td><td>PB02</td><td>Vibration suppression control filter tuning mode</td></tr><tr><td>2622</td><td>PB03</td><td>For manufacturer setting</td></tr><tr><td>2623</td><td>PB04</td><td>Feed forward gain</td></tr><tr><td>2624</td><td>PB05</td><td>For manufacturer setting</td></tr><tr><td>2625</td><td>PB06</td><td>Ratio of load inertia moment to servo motor inertia moment</td></tr><tr><td>2626</td><td>PB07</td><td>Model loop gain</td></tr><tr><td>2627</td><td>PB08</td><td>Position loop gain</td></tr><tr><td>2628</td><td>PB09</td><td>Speed loop gain</td></tr><tr><td>2629</td><td>PB10</td><td>Speed integral compensation</td></tr><tr><td>2630</td><td>PB11</td><td>Speed differential compensation</td></tr><tr><td>2631</td><td>PB12</td><td>For manufacturer setting</td></tr><tr><td>2632</td><td>PB13</td><td>Machine resonance suppression filter 1</td></tr><tr><td>2633</td><td>PB14</td><td>Notch form selection 1</td></tr><tr><td>2634</td><td>PB15</td><td>Machine resonance suppression filter 2</td></tr><tr><td>2635</td><td>PB16</td><td>Notch form selection 2</td></tr></table></td><td>• Servo amplifier power on.
• Multiple CPU system power on.</td><td>Immediate stop</td><td>• After checking and correcting of the parameter setting, turn off to on or reset the power of Multiple CPU system.</td></tr>
</table>

Table 1.12 Servo error (2000 to 2899) list (Continued)

<table>
<tr><th rowspan="2">Error code</th><th colspan="2">Error cause</th><th rowspan="2">Error check</th><th rowspan="2">Error processing</th><th rowspan="2">Corrective action</th></tr>
<tr><th>Name</th><th>Description</th></tr>
<tr><td>2601 to 2899</td><td>Initial parameter error</td><td>
<table>
<tr><th>Error code</th><th>Parameter No.</th><th>Name</th></tr>
<tr><td>2636</td><td>PB17</td><td>For manufacturer setting</td></tr>
<tr><td>2637</td><td>PB18</td><td>Low-pass filter</td></tr>
<tr><td>2638</td><td>PB19</td><td>Vibration suppression control vibration frequency setting</td></tr>
<tr><td>2639</td><td>PB20</td><td>Vibration suppression control resonance frequency setting</td></tr>
<tr><td>2640</td><td>PB21</td><td>For manufacturer setting</td></tr>
<tr><td>2641</td><td>PB22</td><td>For manufacturer setting</td></tr>
<tr><td>2642</td><td>PB23</td><td>Low-pass filter selection</td></tr>
<tr><td>2643</td><td>PB24</td><td>Slight vibration suppression control selection</td></tr>
<tr><td>2644</td><td>PB25</td><td>For manufacturer setting</td></tr>
<tr><td>2645</td><td>PB26</td><td>Gain changing selection</td></tr>
<tr><td>2646</td><td>PB27</td><td>Gain changing condition</td></tr>
<tr><td>2647</td><td>PB28</td><td>Gain changing time constant</td></tr>
<tr><td>2648</td><td>PB29</td><td>Gain changing ratio of load inertia moment to servo motor inertia moment</td></tr>
<tr><td>2649</td><td>PB30</td><td>Gain changing position loop gain</td></tr>
<tr><td>2650</td><td>PB31</td><td>Gain changing speed loop gain</td></tr>
<tr><td>2651</td><td>PB32</td><td>Gain changing speed integral compensation</td></tr>
<tr><td>2652</td><td>PB33</td><td>Gain changing vibration suppression control vibration frequency setting</td></tr>
<tr><td>2653</td><td>PB34</td><td>Gain changing vibration suppression control resonance frequency setting</td></tr>
<tr><td>2654</td><td>PB35</td><td>For manufacturer setting</td></tr>
<tr><td>2655</td><td>PB36</td><td>For manufacturer setting</td></tr>
<tr><td>2656</td><td>PB37</td><td>For manufacturer setting</td></tr>
<tr><td>2657</td><td>PB38</td><td>For manufacturer setting</td></tr>
<tr><td>2658</td><td>PB39</td><td>For manufacturer setting</td></tr>
<tr><td>2659</td><td>PB40</td><td>For manufacturer setting</td></tr>
<tr><td>2660</td><td>PB41</td><td>For manufacturer setting</td></tr>
<tr><td>2661</td><td>PB42</td><td>For manufacturer setting</td></tr>
<tr><td>2662</td><td>PB43</td><td>For manufacturer setting</td></tr>
<tr><td>2663</td><td>PB44</td><td>For manufacturer setting</td></tr>
<tr><td>2664</td><td>PB45</td><td>For manufacturer setting</td></tr>
<tr><td>2665</td><td>PC01</td><td>Error excessive alarm level</td></tr>
<tr><td>2666</td><td>PC02</td><td>Electromagnetic brake sequence output</td></tr>
</table>
</td><td>• Servo amplifier power on.
• Multiple CPU system power on.</td><td>Immediate stop</td><td>• After checking and correcting of the parameter setting, turn off to on or reset the power of Multiple CPU system.</td></tr>
</table>

Table 1.12 Servo error (2000 to 2899) list (Continued)

<table>
<tr><th>Error code</th><th colspan="2">Error cause</th><th>Error check</th><th>Error processing</th><th>Corrective action</th></tr>
<tr><th></th><th>Name</th><th>Description</th><th></th><th></th><th></th></tr>
<tr><td>2601
to
2899</td><td>Initial parameter error</td><td>
<table>
<tr><th>Error code</th><th>Parameter No.</th><th>Name</th></tr>
<tr><td>2667</td><td>PC03</td><td>Encoder output pulses selection</td></tr>
<tr><td>2668</td><td>PC04</td><td>Function selection C-1</td></tr>
<tr><td>2669</td><td>PC05</td><td>Function selection C-2</td></tr>
<tr><td>2670</td><td>PC06</td><td>For manufacturer setting</td></tr>
<tr><td>2671</td><td>PC07</td><td>Zero speed</td></tr>
<tr><td>2672</td><td>PC08</td><td>For manufacturer setting</td></tr>
<tr><td>2673</td><td>PC09</td><td>Analog monitor output 1</td></tr>
<tr><td>2674</td><td>PC10</td><td>Analog monitor output 2</td></tr>
<tr><td>2675</td><td>PC11</td><td>Analog monitor 1 offset</td></tr>
<tr><td>2676</td><td>PC12</td><td>Analog monitor 2 offset</td></tr>
<tr><td>2677</td><td>PC13</td><td>For manufacturer setting</td></tr>
<tr><td>2678</td><td>PC14</td><td>For manufacturer setting</td></tr>
<tr><td>2679</td><td>PC15</td><td>For manufacturer setting</td></tr>
<tr><td>2680</td><td>PC16</td><td>For manufacturer setting</td></tr>
<tr><td>2681</td><td>PC17</td><td>Function selection C-4</td></tr>
<tr><td>2682</td><td>PC18</td><td>For manufacturer setting</td></tr>
<tr><td>2683</td><td>PC19</td><td>For manufacturer setting</td></tr>
<tr><td>2684</td><td>PC20</td><td>For manufacturer setting</td></tr>
<tr><td>2685</td><td>PC21</td><td>Alarm history clear</td></tr>
<tr><td>2686</td><td>PC22</td><td>For manufacturer setting</td></tr>
<tr><td>2687</td><td>PC23</td><td>For manufacturer setting</td></tr>
<tr><td>2688</td><td>PC24</td><td>For manufacturer setting</td></tr>
<tr><td>2689</td><td>PC25</td><td>For manufacturer setting</td></tr>
<tr><td>2690</td><td>PC26</td><td>For manufacturer setting</td></tr>
<tr><td>2691</td><td>PC27</td><td>For manufacturer setting</td></tr>
<tr><td>2692</td><td>PC28</td><td>For manufacturer setting</td></tr>
<tr><td>2693</td><td>PC29</td><td>For manufacturer setting</td></tr>
<tr><td>2694</td><td>PC30</td><td>For manufacturer setting</td></tr>
<tr><td>2695</td><td>PC31</td><td>For manufacturer setting</td></tr>
<tr><td>2696</td><td>PC32</td><td>For manufacturer setting</td></tr>
<tr><td>2697</td><td>PD01</td><td>For manufacturer setting</td></tr>
<tr><td>2698</td><td>PD02</td><td>For manufacturer setting</td></tr>
<tr><td>2699</td><td>PD03</td><td>For manufacturer setting</td></tr>
<tr><td>2700</td><td>PD04</td><td>For manufacturer setting</td></tr>
<tr><td>2701</td><td>PD05</td><td>For manufacturer setting</td></tr>
<tr><td>2702</td><td>PD06</td><td>For manufacturer setting</td></tr>
<tr><td>2703</td><td>PD07</td><td>Output signal device selection 1</td></tr>
<tr><td>2704</td><td>PD08</td><td>Output signal device selection 2</td></tr>
<tr><td>2705</td><td>PD09</td><td>Output signal device selection 3</td></tr>
<tr><td>2706</td><td>PD10</td><td>For manufacturer setting</td></tr>
</table>
</td><td>• Servo amplifier power on.
• Multiple CPU system power on.</td><td>Immediate stop</td><td>• After checking and correcting of the parameter setting, turn off to on or reset the power of Multiple CPU system.</td></tr>
</table>

Table 1.12 Servo error (2000 to 2899) list (Continued)

<table>
<tr><th rowspan="2">Error code</th><th colspan="2">Error cause</th><th rowspan="2">Error check</th><th rowspan="2">Error processing</th><th rowspan="2">Corrective action</th></tr>
<tr><th>Name</th><th>Description</th></tr>
<tr><td>2601 to 2899</td><td>Initial parameter error</td><td>
<table>
<tr><th>Error code</th><th>Parameter No.</th><th>Name</th></tr>
<tr><td>2707</td><td>PD11</td><td>Input filter setting</td></tr>
<tr><td>2708</td><td>PD12</td><td>For manufacturer setting</td></tr>
<tr><td>2709</td><td>PD13</td><td>For manufacturer setting</td></tr>
<tr><td>2710</td><td>PD14</td><td>Function selection D-3</td></tr>
<tr><td>2711</td><td>PD15</td><td>For manufacturer setting</td></tr>
<tr><td>2712</td><td>PD16</td><td>For manufacturer setting</td></tr>
<tr><td>2713</td><td>PD17</td><td>For manufacturer setting</td></tr>
<tr><td>2714</td><td>PD18</td><td>For manufacturer setting</td></tr>
<tr><td>2715</td><td>PD19</td><td>For manufacturer setting</td></tr>
<tr><td>2716</td><td>PD20</td><td>For manufacturer setting</td></tr>
<tr><td>2717</td><td>PD21</td><td>For manufacturer setting</td></tr>
<tr><td>2718</td><td>PD22</td><td>For manufacturer setting</td></tr>
<tr><td>2719</td><td>PD23</td><td>For manufacturer setting</td></tr>
<tr><td>2720</td><td>PD24</td><td>For manufacturer setting</td></tr>
<tr><td>2721</td><td>PD25</td><td>For manufacturer setting</td></tr>
<tr><td>2722</td><td>PD26</td><td>For manufacturer setting</td></tr>
<tr><td>2723</td><td>PD27</td><td>For manufacturer setting</td></tr>
<tr><td>2724</td><td>PD28</td><td>For manufacturer setting</td></tr>
<tr><td>2725</td><td>PD29</td><td>For manufacturer setting</td></tr>
<tr><td>2726</td><td>PD30</td><td>For manufacturer setting</td></tr>
<tr><td>2727</td><td>PD31</td><td>For manufacturer setting</td></tr>
<tr><td>2728</td><td>PD32</td><td>For manufacturer setting</td></tr>
</table>
</td><td>• Servo amplifier power on.
• Multiple CPU system power on.</td><td>Immediate stop</td><td>• After checking and correcting of the parameter setting, turn off to on or reset the power of Multiple CPU system.</td></tr>
</table>

APPENDIX 1.5 PC link communication errors

Table 1.13 PC link communication error codes list

Error codes stored in D9196	Error description	Corrective action
01	• A receiving packet for PC link communication does not arrive. • The arrival timing of the receiving packet is too late.	• Check whether the power of PC has been turned on. • Check the connection of the communication cable. • Check the communication cable for wire breakage. • Check whether the A□0BD-PCF/ A30CD-PCF has been installed correctly.
02	• A receiving packet CRC code is not right.	• Check whether there is a noise source near the PC. • Check the connection of the communication cable. • Check the communication cable for wire breakage.
03	• A receiving packet data ID is not right.	• Check whether the A□0BD-PCF/ A30CD-PCF has been installed correctly. • Replace the A□0BD-PCF/A30CD-PCF.
04	• The number of received frames is not right.	• Check whether there is a noise source near the PC. • Check the connection of the communication cable. • Check the communication cable for wire breakage.
05	• A PC communication task does not start.	• Start the communication task for PC side.

APPENDIX 2 Special Relays/special registers

APPENDIX 2.1 Special relays

Special relays are internal relays whose applications are fixed in the Motion CPU. For this reason, they cannot be used in the same way as the normal internal relays by the Motion SFC programs.
However, they can be turned ON/OFF as needed in order to control the Motion CPU.

The headings in the table that follows have the following meanings.

Item	Explanation
No.	• Indicates the device No. of the special relay.
Name	• Indicates the name of the special relay.
Meaning	• Indicates the nature of the special relay.
Details	• Indicates detailed information about the nature of the special relay.
Set by (When set)	• Indicates whether the relay is set by the system or user, and, if it is set by system, when setting is performed. <Set by> S: Set by system (Motion CPU) U: Set by user (Motion SFC program or test operation using a peripheral device) S/U: Set by both system (Motion CPU) and user <When set> Indicated only if setting is done by system (Motion CPU). Main process: Set during each main processing (free time processing of the CPU) Initial process: Set only during initial processing (when power supply is turned ON, or when executed the reset) Status change : Set only when there is a change in status Error : Set when error is occurred. Request : Set only when there is a user request (Special relay, etc.) Operation cycle : Set during each operation cycle of the Motion CPU.

Table 2.1 Special relay list

No.	Name	Meaning	Details	Set by (When set)	Remark
M9000	Fuse blown detection	OFF : Normal ON : Fuse blown module detected	• Turn on when there is one or more output modules control of self CPU which fuse has been blown. Remains on if normal status is restored.	S(Occur an error)	
M9005	AC/DC DOWN detection	OFF : AC/DC DOWN not detected ON : AC/DC DOWN detected	• Turn on if a momentary power interruption of less than 20[ms] occurred during use of the AC power supply module, and reset by turning power off to on. • Turn on if a momentary power interruption of less than 10[ms] occurred during use of the DC power supply module, and reset by turning power off to on.		
M9006	Battery low	OFF : Normal ON : Battery low	• Turned on when the voltage of the external battery reduces to less than specified value. Turn off when the voltage of the external battery becomes normal. • Synchronizes with "BAT. LED" • Check the voltage of the external battery, only when it is set with "external battery use" by system setting.		
M9007	Battery low latch	OFF : Normal ON : Battery low	• Turn on when the voltage of the external battery reduces to less than specified value. Remains on if normal status is restored. • Synchronizes with "BAT. LED" • Check the voltage of the external battery, only when it is set with "external battery use" by system setting.		
M9008	Self-diagnostic error	OFF : No error ON : Error	• Turn on when error is found as a result of self-diagnosis. Remains on if normal status is restored.		
M9010	Diagnostic error	OFF : No error ON : Error	• Turn on when error is found as a result of diagnosis. Remains on if normal status is restored.		
M9025	Clock data set request	OFF : Ignored ON : Set request present used	• Write clock data stored in D9025 to D9028 to the clock element when M9025 has changed from off to on.	U	
M9026	Clock data error	OFF : No error ON : Error	• Turn on by clock data (D9025 to D9028) error.	S(Request)	
M9028	Clock data read request	OFF : Ignored ON : Read request	• Read clock data from D9025 to D9028 in BCD when M9028 is on.	U	
M9036	Always ON	ON ———— OFF	• Turn on without regard to position of RUN/STOP switch on.	S(Main processing)	
M9037	Always OFF	ON OFF ————	• Turn off without regard to position of RUN/STOP switch on.		
M9060	Error reset	OFF → ON : Error reset	• A release of the error is executed.	U	
M9073	PCPU WDT error flag	ON : Abnormal OFF : Normal	• Turn on when a "watchdog timer error" is detected by the Motion CPU self-diagnosis function. When the Motion CPU detects a WDT error, it executes an immediate stop without deceleration of the operating axes. • The error cause is stored in the "Motion CPU WDT error cause (D9184)".	S(Occur an error)	
M9074	PCPU READY complete flag	ON : PCPU READY completion OFF : PCPU READY uncompletion	• When the PLC ready flag (M2000) turn off to on, the fixed parameters, servo parameters and limit switch output data, etc., are checked, and if no error is detected this flag turns on. • Turn off when the PLC ready flag (M2000) turns off.	S(Request)	
M9075	Test mode ON flag	ON : TEST mode is in effect. OFF : TEST mode is not in effect.	• This flag status indicates whether a TEST mode established from a peripheral device is currently in effect. • If the TEST mode is not established in response to a TEST mode request from a peripheral device, the "TEST mode request error flag (M9078)" will turn on.	S(Request)	
M9076	External forced stop input flag	ON : Forced stop OFF OFF : Forced stop ON	• This flag status indicate whether the forced stop.	S(Operation cycle)	

Table 2.1 Special relay list (continued)

No.	Name	Meaning	Details	Set by (When set)	Remark
M9077	Manual pulse generator axis setting error flag	ON : At least one D714 to D719 setting is abnormal. OFF : All D714 to D719 settings are normal.	• This flag indicates whether the setting designated at the manual pulse generator axis setting register (D714 to D719) is normal or abnormal. • When this relay turns on, the error content is stored at the manual pulse generator axis setting error register (D9185 to D9187).	S(Occur an error)	
M9078	TEST mode request error flag	ON : Abnormal OFF : Normal	• Turn on if the TEST mode is not established in response to a TEST mode request from a peripheral device. • When this relay turns on, the error content is stored at the TEST mode request error register (D9182 to D9183).		
M9079	Servo program setting error flag	ON : Abnormal OFF : Normal	• This flag status indicates whether the positioning data of the servo program(K) specified with the Motion SFC program is normal or abnormal, and if error is detected this flag turns on. • The content of a servo program setting error is stored at D9189 and D9190.		
M9216	CPU No.1 MULTR complete flag	OFF to ON : CPU No.1 read completion	• Turn on when the data read from CPU No.1 is performed normally by MULTR instruction.	S(Read completion)	
M9217	CPU No.2 MULTR complete flag	OFF to ON : CPU No.2 read completion	• Turn on when the data read from CPU No.2 is performed normally by MULTR instruction.		
M9218	CPU No.3 MULTR complete flag	OFF to ON : CPU No.3 read completion	• Turn on when the data read from CPU No.3 is performed normally by MULTR instruction.		
M9219	CPU No.4 MULTR complete flag	OFF to ON : CPU No.4 read completion	• Turn on when the data read from CPU No.4 is performed normally by MULTR instruction.		
M9240	CPU No.1 reset flag	OFF : CPU No.1 reset release ON : CPU No.1 resetting	• Turn off at reset release of the CPU No.1. • Turn on during reset of the CPU No.1. (It also contains when a CPU is removed from the base unit.) • The other CPU is also resetting.	S(Change status)	
M9241	CPU No.2 reset flag	OFF : CPU No.2 reset release ON : CPU No.2 resetting	• Turn off at reset release of the CPU No.2. • Turn on during reset of the CPU No.2. (It also contains when a CPU is removed from the base unit.) • The error of the "MULTI CPU DOWN" (error code : 7000) occurs in the other CPU.		
M9242	CPU No.3 reset flag	OFF : CPU No.3 reset release ON : CPU No.3 resetting	• Turn off at reset release of the CPU No.3. • Turn on during reset of the CPU No.3. (It also contains when a CPU is removed from the base unit.) • The error of the "MULTI CPU DOWN" (error code : 7000) occurs in the other CPU.		
M9243	CPU No.4 reset flag	OFF : CPU No.4 reset release ON : CPU No.4 resetting	• Turn off at reset release of the CPU No.4. • Turn on during reset of the CPU No.4. (It also contains when a CPU is removed from the base unit.) • The error of the "MULTI CPU DOWN" (error code : 7000) occurs in the other CPU.		
M9244	CPU No.1 error flag	OFF : CPU No.1 normal ON : On CPU No.1 stop error	• Turn off when the CPU No.1 is normal. (It contains at continuation error.) • Turn on during stop error of the CPU No.1. (Note-1)		
M9245	CPU No.2 error flag	OFF : CPU No.2 normal ON : On CPU No.2 stop error	• Turn off when the CPU No.2 is normal. (It contains at continuation error.) • Turn on during stop error of the CPU No.2. (Note-1)		
M9246	CPU No.3 error flag	OFF : CPU No.3 normal ON : On CPU No.3 stop error	• Turn off when the CPU No.3 is normal. (It contains at continuation error.) • Turn on during stop error of the CPU No.3. (Note-1)		
M9247	CPU No.4 error flag	OFF : CPU No.4 normal ON : On CPU No.4 stop error	• Turn off when the CPU No.4 is normal. (It contains at continuation error.) • Turn on during stop error of the CPU No.4. (Note-1)		

(Note-1): The CPU No.1 is reset after the factor of the stop error is removed to cancel a stop error. → Resetting is cancelled.

APPENDIX 2.2 Special registers

Special registers are internal registers whose applications are fixed in the Motion CPU. For this reason, it is not possible to use these registers in Motion SFC programs in the same way that normal registers are used.
However, data can be written as needed in order to control the Motion CPU.
Data stored in the special registers are stored as BIN values if no special designation has been made to the contrary.

The headings in the table that follows have the following meanings.

Item	Explanation
Number	• Indicates the No. of the special register.
Name	• Indicates the name of the special register.
Meaning	• Indicates the nature of the special register.
Details	• Indicates detailed information about the nature of the special register.
Set by (When set)	• Indicates whether the register is set by the system or user, and, if it is set by system, when setting is performed. <Set by> S: Set by system (Motion CPU) U: Set by user (Motion SFC program or test operation using a peripheral device) S/U: Set by both system (Motion CPU) and user <When set> Indicated only if setting is done by system (Motion CPU). Main process: Set during each main processing (free time processing of the CPU) Initial process: Set only during initial processing (when power supply is turned ON, or when executed the reset) Status change : Set only when there is a change in status Error : Set when error is occurred. Request : Set only when there is a user request (Special relay, etc.) Operation cycle : Set during each operation cycle of the Motion CPU.

Table 2.2 Special register list

No.	Name	Meaning	Details	Set by (When set)	Remark
D9000	Fuse blown No.	Module No. with blown fuse	• When fuse blown modules are detected, the lowest I/O module No. is stored in D9000.	S(Occur an error)	
D9005	AC/DC DOWN counter No.	Number of times for AC/DC DOWN	• 1 is added to the stored value each time the input voltage becomes 85[%] (AC power supply/65[%] DC power supply) or less of the rating while the CPU module is performing an operation, and the value is stored in BIN code.		
D9008	Diagnostic error	Diagnostic error number	• When error is found as a result of self-diagnosis, error No. is stored in BIN code. • Refer to "2.4 Multiple CPU Error Codes" of the "Q173HCPU/Q172HCPU Motion Controller Programming Manual (COMMON)" for details of the error code.		
D9010	Diagnostic error occurrence time	Diagnostic error occurrence time	• The age (A.D, the rightmost two digits) when data on D9008 are updated, and the month stored with a BCD code two digits. B15 to B8 B7 to B0 Example : October 1995 Year(0 to 99) | Month(1 to 12) H9510		
D9011			• The day when data on D9008 are updated, and the hour stored with a BCD code two digits. B15 to B8 B7 to B0 Example : 25st, 10 a.m Day(1 to 31) | Hour(0 to 23) H2510		
D9012			• The minute when data on D9008 are updated, and the second stored with a BCD code two digits. B15 to B8 B7 to B0 Example : 35 min., 48 sec. Minute(0 to 59) | Second(0 to 59) H3548		
D9013	Error information classification	Error information classification code	• The classification code to judge the error information stored in the error information (D9014) is stored. • The following codes are stored. 0: None 1: Module No./CPU No./Base No. 2: Parameter No.		
D9014	Error information	Error information	• Error information to comply with the diagnostic error (D9008) is stored. There are following two types information to be stored. 1) Module No./CPU No./Base No. • Module No. or CPU No. is stored according to the error which occurred in the case of the Multiple CPU system. (Refer to each error code which is stored.) CPU No.1: 1, CPU No.2: 2, CPU No.3: 3, CPU No.4: 4 2) Parameter No.		
D9015	Operating state of CPU	Operating state of CPU	• The operation states of CPU as shown below are stored in D9015. 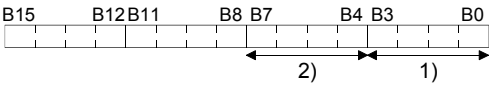 1) Operating state of CPU 0: RUN 2: STOP 2) STOP cause 0: RUN/STOP switch 4: Error Note: Priority is earliest first	S(Main processing)	
D9017	Scan time	Scan time (1ms units)	• Main cycle is stored in the unit 1ms. • Setting range (0 to 65535[ms])		
D9019	Maximum scan time	Maximum scan time (1ms units)	• The maximum value of the main cycle is stored in the unit 1ms. • Setting range (0 to 65535[ms])		
D9025	Clock data	Clock data (Year, month)	• Stores the year (2 lower digits) and month in BCD. 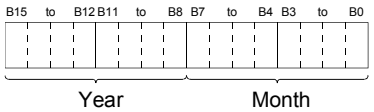 Example : July 1993 H9307	S/U(Request)	

Table 2.2 Special register list (continued)

<table>
<tr><th>No.</th><th>Name</th><th>Meaning</th><th>Details</th><th>Set by
(When set)</th><th>Remark</th></tr>
<tr><td>D9026</td><td rowspan="2">Clock data</td><td>Clock data
(Day, hour)</td><td>• Stores the day and hour in BCD.
 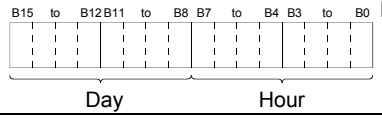

Example : 31st, 10 a.m.
H3110</td><td rowspan="3">S/U(Request)</td><td rowspan="4"></td></tr>
<tr><td>D9027</td><td>Clock data
(Minute, second)</td><td>• Stores the minute and second in BCD.
 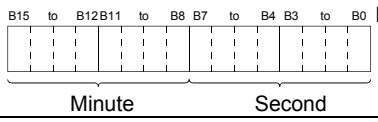

Example : 35 min., 48 sec.
H3548</td></tr>
<tr><td>D9028</td><td>Clock data</td><td>Clock data
(Day of week)</td><td>• Stores the day of the week in BCD.
 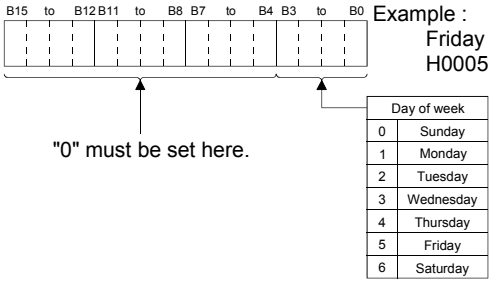

Example :
Friday
H0005</td></tr>
<tr><td>D9060</td><td>Error reset</td><td>Error No. of releasing an error</td><td>• Error No. of canceling error is stored.</td><td>U</td></tr>
<tr><td>D9061</td><td>Multiple CPU No.</td><td>Multiple CPU No.</td><td>• CPU No. of the self CPU is stored.</td><td>S(Initial processing)</td></tr>
<tr><td rowspan="4">D9112</td><td rowspan="4">Connect/
disconnect</td><td rowspan="4">Connect/
disconnect of
SSCNET</td><td>• When the servo amplifier or SSCNETⅢ cable of SSCNET system are exchanged or re-connected, an user side requires connect/disconnect, and a system side stores the states of command accept waiting or execute waiting for connect/disconnect.</td><td>—</td></tr>
<tr><td>0 : Connect/disconnect command accept waiting
-1 : Connect/disconnect execute waiting</td><td>S (Main processing)</td></tr>
<tr><td>1 to 32 : Disconnect command
-10 : Re-connect command</td><td rowspan="2">U</td></tr>
<tr><td>-2 : Connect/disconnect execute command</td></tr>
<tr><td>D9182
D9183</td><td>Test mode
request error</td><td>It is operating in requirement error occurrence of the test mode, axis information</td><td>• Each axis is stopping: 0/Operating: 1, information is stored as a bit data.
D9182: b0 to b15 (Axis 1 to Axis 16)
D9183: b0 to b15 (Axis 17 to Axis 32)</td><td rowspan="3">S(Occur an error)</td><td rowspan="3"></td></tr>
<tr><td>D9184</td><td>Motion CPU
WDT error cause</td><td>Error meaning of
WDT error occurs</td><td>The following error codes are stored in D9184.
1: S/W fault 1
2: Operation cycle over
3: Q bus WDT error
4: WDT error
30: Information processor H/W error
201 to 215: Q bus H/W fault
250 to 253: Servo amplifier interface H/W fault
300: S/W fault3
301: 15 CPSTART instructions of 8 or more points were started simultaneously.</td></tr>
<tr><td>D9185
D9186
D9187</td><td>Manual pulse
generator axis
setting error</td><td>Manual pulse
generator axis
setting error
information</td><td>• Contents of the manual pulse generator axis setting error is stored when the manual pulse generator axis setting error flag (M9077) turn on.
(Normal: 0/Setting error: 1)
D9185: The manual pulse generator axis setting error is stored in b0 to b2 (P1 to P3).
The smoothing magnification setting is stored in b3 to b5 (P1 to P3).
D9186: One pulse input magnification setting error is stored in b0 to b15 (axis 1 to axis 16).
D9187: One pulse input magnification setting error is stored in b0 to b15 (axis 17 to axis 32).</td></tr>
</table>

Table 2.2 Special register list (continued)

No.	Name	Meaning	Details	Set by (When set)	Remark
D9188	Motion operation cycle	Motion operation cycle	• The time when the motion operation cycle is stored in the [μs] unit.	S(Operation cycle)	
D9189	Error program No.	Error program No. of servo program	When the servo program setting error flag (M9079) turns on, the erroneous servo program No. will be stored.	S(Occur an error)	
D9190	Error item information	Error code of servo program	When the servo program setting error flag (M9079) turns on, the error code corresponding to the erroneous setting item will be stored.		
D9191 D9192	Servo amplifier loading information	Servo amplifier loading information	• The loading status (loading: 1/non-loading: 0) of the servo amplifier checked in initial process, and stored as the bit data. D9191: b0 to b15 (axis 1 to axis 16) D9192: b0 to b15 (axis 17 to axis 32) • The axis which turned from non-loading to loading status after power-on is handled as loaded. (However, the axis which turned from loading to non-loading status remains as loaded.)	S(Initial processing)	
D9193 D9194 D9195	Real/virtual mode switching error information	Real/virtual mode Switching error code	• When a mode switching error occurs in real-to-virtual or virtual-to-real mode switching, or a mode continuation error occurs in the virtual mode, its error information is stored.	S(Occur an error)	
D9196	PC link communication error codes	PC link communication error codes	• The following error code is stored. 00: No error 01: Receiving timing error 02: CRC error 03: Communication response code error 04: Received frame error 05: Communication task start error (Each error code is reset to "00" when normal communication is restarted.)		
D9197	Operation cycle of the Motion CPU setting	Operation cycle of the Motion CPU setting	• The time when the setting operation cycle is stored in the [μs] unit.	S(Initial processing)	
D9200	State of switch	State of CPU switch	• The CPU switch status is stored in the following format. 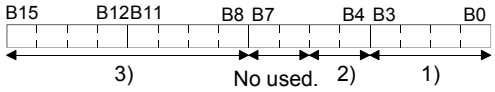 1) CPU switch status: 0: RUN, 1: STOP, 2: L.CLR 2) Memory card switch: Always OFF 3) Dip switch: B8 through B12 correspond to SW1 through SW5 of system setting switch 1. 0: OFF/1: ON B13 through B15 is not used.	S(Main processing)	
D9201	State of LED	State of CPU-LED	• Information concerning which of the following states the LEDs on the CPU are in is stored in the following bit patterns. • 0 is off, 1 is on, and 2 is flicker 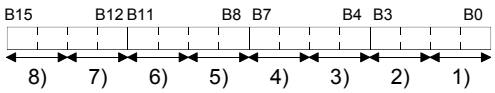 1): RUN, 2): ERROR, 3): M.RUN, 4): BAT.ALARM 5): BOOT, 6): No used, 7): No used, 8): MODE Bit patterns for MODE 0: OFF 1: Green 2: Orange	S(Change status)	

APPENDIX 3 Example Programs

APPENDIX 3.1 Reading M-code

The program example for reading M-code at the completion of positioning start or positioning is shown below.
The judgement of the positioning start completion and positioning completion is made with the following signals.

- Positioning start completion ……M2400+20n (positioning start complete signal)
- Positioning completion ……M2401+20n (positioning complete signal)

[Program Example]

(1) A program that outputs the M-code from PY000 to PY00F to external destination after conversion into BCD code at the positioning start completion is shown below.

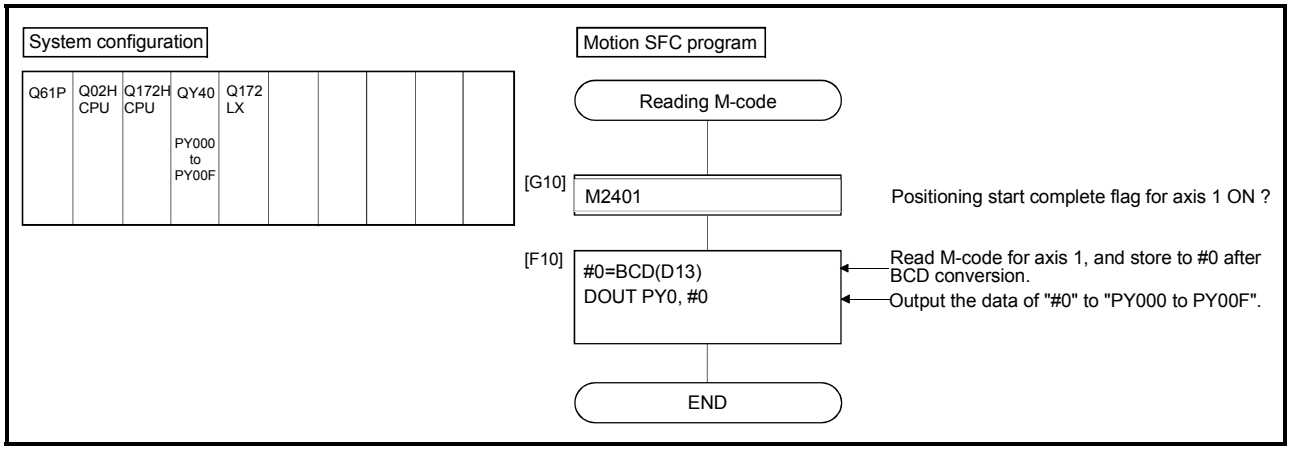

APPENDIX 3.2 Reading error code

The program example for reading error code at the error occurrence is shown below.
The following signals are used to determine whether or not an error has occurred:

- Minor errors, major errors …… Error detection signal (M2407+20n)
- Servo errors ……... Servo error detection signal (M2408+20n)

POINT

(1) The following delay occurs in the turning off to on of M2407+20n/M2408+20n and storage of the error code.
   (a) If the PLC program scan time is 80[ms] or less, there will be a delay of up to 80[ms].
   (b) If the PLC program scan time is 80[ms] or more, there will be a delay of up to one scan time.
   The error code is stored to each error code stprage area after turning on M2407+20n/M2408+20n, and then read the error code.

[Program Example]

(1) A program that outputs each error code to PY000 to PY00F (minor error), PY010 to PY01F (major error) and PY020 to PY02F (servo error) after conversion into BCD code at the error occurrence with axis 1 is shown below.

System configuration

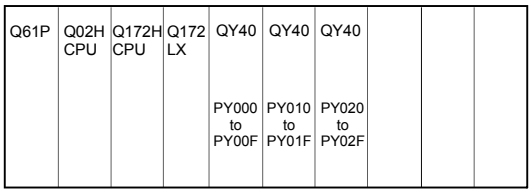

Motion SFC program

Reading error code (minor error/major error)

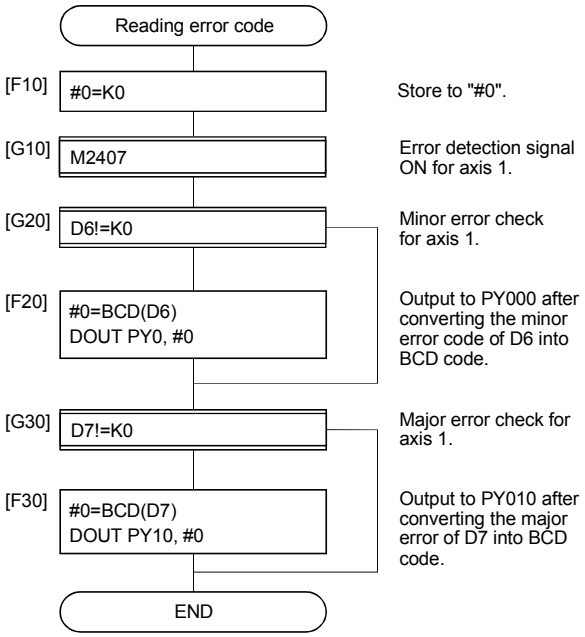

Reading error code (servo error)

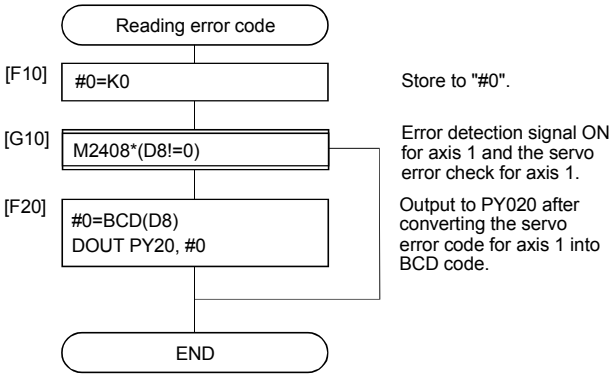

APPENDIX 4 Setting Range for Indirect Setting Devices

Positioning address, command speed or M-code, etc. (excluding the axis No.) set in the servo program can be set indirectly by the word.

(1) Device range

The number of device words and device range at indirect setting are shown below.

	Item	Number of device words	Device setting range	Remarks
Common	Address (travel value)	2		
	Command speed	2		
	Dwell time	1		
	M-code	1		
	Torque limit value	1		
	Parameter block No.	1		
Arc	Auxiliary point	2		
	Radius	2		
	Central point	2		
	Pitch	1		
Parameter block	Control unit	1		
	Speed limit value	2		
	Acceleration time	1		
	Deceleration time	1		
	Rapid stop deceleration time	1		
	Torque limit value	1		
	STOP input deceleration processing	1		
	Circular interpolation error allowance range	2		
	S-curve ratio	1		
Others	Program No.	1		Simultaneous start
	Command speed (Constant speed)	2		
	FIN acceleration/deceleration	1		
	Fixed position stop acceleration/deceleration time	1		
	Repetition condition (Number of repetitions)	1		
	Repetition condition (ON/OFF)	Bit		
	Cancel			
	Skip			
	WAIT ON/OFF			
	Fixed position stop			

Device	Range
D	800 to 8191
W	0000 to 1FFF
#	0000 to 7999

Device	Range
X	0000 to 1FFF
Y	0000 to 1FFF
M/L	0 to 8191
Special relay	9000 to 9255
B	0000 to 1FFF
F	0 to 2047

(Note): Synchronous encoder axis area cannot be set.

POINT

Be sure to set even-numbered devices for 2-word setting items.
Be sure to set as 32-bit integer type when the data is set in these devices using the Motion SFC programs. (Example : #0L, D0L)

(2) Inputting device data

Indirect setting device data is inputted by the Motion CPU at the servo program start.

Do not change the applicable device before setting to device and start completion.

The procedures by start method for setting data to devices and cautions are shown below.

Start method	Setting method	Notes
Start by the servo program	Set data in indirect setting devices. ↓ Start the servo program.	Do not change the indirect setting device before the "positioning start complete signal" of the starting axis turns on.
Set the loop (FOR - NEXT) point data for CPSTART instruction indirectly	Set initial command data in the indirect setting device. ↓ Start using the servo program (or turn the cancel command device on). ↓ Read the value of "data set pointer for constant-speed control" of the start axis, and update the data input by Motion CPU.	Refer to the positioning signal data register "Monitoring data area" for details.

APPENDIX 5 Processing Times of the Motion CPU

The processing time of each signal and each instruction for positioning control in the Multiple CPU system is shown below.

(1) Motion operation cycle [ms] (Default)

	Q173HCPU					Q172HCPU		
Number of setting axes (SV22)	—	1 to 5	6 to 14	15 to 28	29 to 32	—	1 to 5	6 to 8
Number of setting axes (SV13)	1 to 3	4 to 10	11 to 20	21 to 32	—	1 to 3	4 to 8	—
Operation cycle [ms]	0.44	0.88	1.77	3.55	7.11	0.44	0.88	1.77

(2) CPU processing time [ms]

		Q173HCPU					Q172HCPU		
Operation cycle		0.44	0.88	1.77	3.55	7.11	0.44	0.88	1.77
Servo program start processing time (Note-1)	"WAIT ON/OFF" + Motion control step	0.8 to 1.0	1.1 to 1.6	2.5 to 3.2	4.3 to 6.0	8.1 to 11.1	0.8 to 1.0	1.1 to 1.6	2.5 to 3.2
	Only Motion control step	1.0 to 1.6	1.8 to 2.3	3.0 to 3.9	4.8 to 6.6	9.4 to 11.5	1.0 to 1.6	1.8 to 2.3	3.0 to 3.9
Speed change response		0.9 to 1.2	1.2 to 2.0	2.8 to 3.6	4.5 to 5.9	8.5 to 11.0	0.9 to1.2	1.2 to 2.0	2.8 to 3.6
Torque limit value change response		0.4 or less	0.8 or less	1.7 or less	3.5 or less	3.5 or less	0.4 or less	0.8 or less	1.7 or less
Simultaneous start processing time (Note-2)		0.9 to 1.6	1.7 to 2.5	3.5 to 4.2	5.0 to 6.5	8.6 to 12.0	0.9 to 1.6	1.7 to 2.5	3.5 to 4.2
Time from PLC ready flag (M2000) ON to PCPU ready flag (M9074) ON		39 to 433							

(Note-1): FEED instruction varies greatly depending on the condition (whether other axes are operating or being stopped).

(Note-2): This processing time varies depending on the simultaneous start command. Use this time merely for reference.

(Note-3): If the servo amplifiers of 9 axes or more are connected to one SSCNETⅢ system, it does not support an operation cycle of 0.4[ms]. 0.8[ms] is used as the real operation cycle, even if 0.4[ms] is set in the system setting.

(3) Axis status list

Axis No.	Device No.	Signal name
1	M2400 to M2419	
2	M2420 to M2439	
3	M2440 to M2459	
4	M2460 to M2479	
5	M2480 to M2499	
6	M2500 to M2519	
7	M2520 to M2539	
8	M2540 to M2559	
9	M2560 to M2579	
10	M2580 to M2599	
11	M2600 to M2619	
12	M2620 to M2639	
13	M2640 to M2659	
14	M2660 to M2679	
15	M2680 to M2699	
16	M2700 to M2719	
17	M2720 to M2739	
18	M2740 to M2759	
19	M2760 to M2779	
20	M2780 to M2799	
21	M2800 to M2819	
22	M2820 to M2839	
23	M2840 to M2859	
24	M2860 to M2879	
25	M2880 to M2899	
26	M2900 to M2919	
27	M2920 to M2939	
28	M2940 to M2959	
29	M2960 to M2979	
30	M2980 to M2999	
31	M3000 to M3019	
32	M3020 to M3039	

	Signal name		Refresh cycle	Fetch cycle	Signal direction
0	Positioning start complete		Operation cycle		Status signal
1	Positioning complete				
2	In-position				
3	Command in-position				
4	Speed controlling				
5	Speed/position switching latch				
6	Zero pass				
7	Error detection		Immediate		
8	Servo error detection		Operation cycle		
9	Home position return request		Main cycle		
10	Home position return complete		Operation cycle		
11	External signals	FLS	Main cycle		
12		RLS			
13		STOP			
14		DOG/CHANGE			
15	Servo ready		Operation cycle		
16	Torque limiting				
17	Unusable		—	—	—
18	Virtual mode continuation operation disable warning signal (SV22) (Note-1)		At virtual mode transition		Status signal
19	M-code outputting signal		Operation cycle		

(Note-1): It is unusable in the SV13/SV22 real mode.

(Note-2): The range of axis No.1 to 8 is valid in the Q172HCPU.

(Note-3): Device area of 9 axes or more is unusable in the Q172HCPU.

(4) Axis command signal list

Axis No.	Device No.
1	M3200 to M3219
2	M3220 to M3239
3	M3240 to M3259
4	M3260 to M3279
5	M3280 to M3299
6	M3300 to M3319
7	M3320 to M3339
8	M3340 to M3359
9	M3360 to M3379
10	M3380 to M3399
11	M3400 to M3419
12	M3420 to M3439
13	M3440 to M3459
14	M3460 to M3479
15	M3480 to M3499
16	M3500 to M3519
17	M3520 to M3539
18	M3540 to M3559
19	M3560 to M3579
20	M3580 to M3599
21	M3600 to M3619
22	M3620 to M3639
23	M3640 to M3659
24	M3660 to M3679
25	M3680 to M3699
26	M3700 to M3719
27	M3720 to M3739
28	M3740 to M3759
29	M3760 to M3779
30	M3780 to M3799
31	M3800 to M3819
32	M3820 to M3839

Signal name

	Signal name	Refresh cycle	Fetch cycle	Signal direction
0	Stop command		Operation cycle	Command signal
1	Rapid stop command			
2	Forward rotation JOG start command		Main cycle	
3	Reverse rotation JOG start command			
4	Complete signal OFF command			
5	Speed/position switching enable command		Operation cycle	
6	Unusable	_	_	_
7	Error reset command		Main cycle	Command signal
8	Servo error reset command			
9	External stop input disable at start		At start	
10	Unusable	_	_	_
11				
12	Feed current value update request command		At start	Command signal
13	Address clutch reference setting command (SV22 only) (Note-1)		At virtual mode transition	
14	Cam reference position setting command (SV22 only) (Note-1)			
15	Servo OFF command		Operation cycle	
16	Gain changing command		Operation cycle (Note-4)	
17	Unusable	_	_	_
18	Control loop changing command		Operation cycle	Command signal
19	FIN signal			

(Note-1): It is unusable in the SV13/SV22 real mode.
(Note-2): The range of axis No.1 to 8 is valid in the Q172HCPU.
(Note-3): Device area of 9 axes or more is unusable in the Q172HCPU.
(Note-4): Operation cycle 7.1[ms] or more: Every 3.5[ms]

(5) Common device list

Device No.	Signal name	Refresh cycle	Fetch cycle	Signal direction	Remark (Note-5)
M2000	PLC ready flag		Main cycle	Command signal (Note-4)	M3072
M2001	Axis 1	Operation cycle		Status signal (Note-1), (Note-2)	
M2002	Axis 2				
M2003	Axis 3				
M2004	Axis 4				
M2005	Axis 5				
M2006	Axis 6				
M2007	Axis 7				
M2008	Axis 8				
M2009	Axis 9				
M2010	Axis 10				
M2011	Axis 11				
M2012	Axis 12				
M2013	Axis 13				
M2014	Axis 14				
M2015	Axis 15				
M2016	Axis 16				
M2017	Axis 17				
M2018	Axis 18				
M2019	Axis 19				
M2020	Axis 20				
M2021	Axis 21				
M2022	Axis 22				
M2023	Axis 23				
M2024	Axis 24				
M2025	Axis 25				
M2026	Axis 26				
M2027	Axis 27				
M2028	Axis 28				
M2029	Axis 29				
M2030	Axis 30				
M2031	Axis 31				
M2032	Axis 32				
M2033	Unusable	—	—	—	—
M2034	Personal computer link communication error flag	Operation cycle		Status signal	
M2035	Motion SFC error history clear request flag (Note-6)		Main cycle	Command signal	M3080
M2036	Unusable (3 points)	—	—	—	—
M2037					
M2038					
M2039	Motion SFC error detection flag	At virtual mode transition	Immediate	Status signal	
M2040	Speed switching point specified flag		At start	Command signal (Note-4)	M3073
M2041	System setting error flag	Operation cycle		Status signal	
M2042	All axes servo ON command	At virtual mode transition	Operation cycle	Command signal (Note-4)	M3074
M2043	Real/virtual mode switching request (SV22)		At virtual mode transition		M3075
M2044	Real/virtual mode switching status (SV22)			Status signal	
M2045	Real/virtual mode switching error detection signal (SV22)				
M2046	Out-of-sync warning (SV22)				
M2047	Motion slot fault detection flag	Operation cycle			
M2048	JOG operation rsimultaneous start command		Main cycle	Command signal (Note-4)	M3076
M2049	All axes servo ON accept flag	Operation cycle		Status signal	
M2050	Start buffer full				
M2051	Manual pulse generator 1 enable flag		Main cycle	Command signal (Note-4)	M3077
M2052	Manual pulse generator 2 enable flag				M3078

Device No.	Signal name	Refresh cycle	Fetch cycle	Signal direction	Remark (Note-5)
M2053	Manual pulse generator 3 enable flag		Main cycle	Command signal (Note-4)	M3079
M2054	Operation cycle over flag	Operation cycle		Status signal	
M2055	Unusable (6 points)	—	—	—	—
M2056					
M2057					
M2058					
M2059					
M2060					
M2061	Axis 1	Operation cycle		Status signal (Note-1), (Note-2)	
M2062	Axis 2				
M2063	Axis 3				
M2064	Axis 4				
M2065	Axis 5				
M2066	Axis 6				
M2067	Axis 7				
M2068	Axis 8				
M2069	Axis 9				
M2070	Axis 10				
M2071	Axis 11				
M2072	Axis 12				
M2073	Axis 13				
M2074	Axis 14				
M2075	Axis 15				
M2076	Axis 16				
M2077	Axis 17				
M2078	Axis 18				
M2079	Axis 19				
M2080	Axis 20				
M2081	Axis 21				
M2082	Axis 22				
M2083	Axis 23				
M2084	Axis 24				
M2085	Axis 25				
M2086	Axis 26				
M2087	Axis 27				
M2088	Axis 28				
M2089	Axis 29				
M2090	Axis 30				
M2091	Axis 31				
M2092	Axis 32				
M2093	Unusable (8 points)	—	—	—	—
M2094					
M2095					
M2096					
M2097					
M2098					
M2099					
M2100					
M2101	Axis 1	Operation cycle		Status signal (Note-1), (Note-2)	
M2102	Axis 2				
M2103	Axis 3				
M2104	Axis 4				
M2105	Axis 5				
M2106	Axis 6				
M2107	Axis 7				
M2108	Axis 8				
M2109	Axis 9				
M2110	Axis 10				
M2111	Axis 11				
M2112	Axis 12				
M2113	Unusable (6 points)	—	—	—	—
M2114					
M2115					
M2116					
M2117					
M2118					

Speed changing flag

Synchronous encoder current value changing flag (Note-3) (12 axes)

Common device list (Continued)

Device No.	Signal name			Refresh cycle	Fetch cycle	Signal direction	Remark (Note-4)
M2119	Unusable (9 points)			—	—	—	—
M2120							
M2121							
M2122							
M2123							
M2124							
M2125							
M2126							
M2127							
M2128	Axis 1	Automatically deceleration flag		Operation cycle		Status signal (Note-1), (Note-2)	
M2129	Axis 2						
M2130	Axis 3						
M2131	Axis 4						
M2132	Axis 5						
M2133	Axis 6						
M2134	Axis 7						
M2135	Axis 8						
M2136	Axis 9						
M2137	Axis 10						
M2138	Axis 11						
M2139	Axis 12						
M2140	Axis 13						
M2141	Axis 14						
M2142	Axis 15						
M2143	Axis 16						
M2144	Axis 17						
M2145	Axis 18						
M2146	Axis 19						
M2147	Axis 20						
M2148	Axis 21						
M2149	Axis 22						
M2150	Axis 23						
M2151	Axis 24						
M2152	Axis 25						
M2153	Axis 26						
M2154	Axis 27						
M2155	Axis 28						
M2156	Axis 29						
M2157	Axis 30						
M2158	Axis 31						
M2159	Axis 32						
M2160	Output axis 1	Main shaft side	Clutch status (SV22) (Note-3)				
M2161		Auxiliary input side					
M2162	Output axis 2	Main shaft side					
M2163		Auxiliary input side					
M2164	Output axis 3	Main shaft side					
M2165		Auxiliary input side					
M2166	Output axis 4	Main shaft side					
M2167		Auxiliary input side					
M2168	Output axis 5	Main shaft side					
M2169		Auxiliary input side					
M2170	Output axis 6	Main shaft side					
M2171		Auxiliary input side					
M2172	Output axis 7	Main shaft side					
M2173		Auxiliary input side					
M2174	Output axis 8	Main shaft side					
M2175		Auxiliary input side					
M2176	Output axis 9	Main shaft side					
M2177		Auxiliary input side					
M2178	Output axis 10	Main shaft side					
M2179		Auxiliary input side					

Device No.	Signal name			Refresh cycle	Fetch cycle	Signal direction	Remark (Note-4)
M2180	Output axis 11	Main shaft side	Clutch status (SV22) (Note-3)	Operation cycle		Status signal (Note-1), (Note-2)	
M2181		Auxiliary input side					
M2182	Output axis 12	Main shaft side					
M2183		Auxiliary input side					
M2184	Output axis 13	Main shaft side					
M2185		Auxiliary input side					
M2186	Output axis 14	Main shaft side					
M2187		Auxiliary input side					
M2188	Output axis 15	Main shaft side					
M2189		Auxiliary input side					
M2190	Output axis 16	Main shaft side					
M2191		Auxiliary input side					
M2192	Output axis 17	Main shaft side					
M2193		Auxiliary input side					
M2194	Output axis 18	Main shaft side					
M2195		Auxiliary input side					
M2196	Output axis 19	Main shaft side					
M2197		Auxiliary input side					
M2198	Output axis 20	Main shaft side					
M2199		Auxiliary input side					
M2200	Output axis 21	Main shaft side					
M2201		Auxiliary input side					
M2202	Output axis 22	Main shaft side					
M2203		Auxiliary input side					
M2204	Output axis 23	Main shaft side					
M2205		Auxiliary input side					
M2206	Output axis 24	Main shaft side					
M2207		Auxiliary input side					
M2208	Output axis 25	Main shaft side					
M2209		Auxiliary input side					
M2210	Output axis 26	Main shaft side					
M2211		Auxiliary input side					
M2212	Output axis 27	Main shaft side					
M2213		Auxiliary input side					
M2214	Output axis 28	Main shaft side					
M2215		Auxiliary input side					
M2216	Output axis 29	Main shaft side					
M2217		Auxiliary input side					
M2218	Output axis 30	Main shaft side					
M2219		Auxiliary input side					
M2220	Output axis 31	Main shaft side					
M2221		Auxiliary input side					
M2222	Output axis 32	Main shaft side					
M2223		Auxiliary input side					
M2224	Unusable (5 points)			—	—	—	—
M2225							
M2226							
M2227							
M2228							

Common device list (Continued)

Device No.	Signal name		Refresh cycle	Fetch cycle	Signal direction	Remark (Note-5)
M2229	Unusable (11 points)		—	—	—	—
M2230						
M2231						
M2232						
M2233						
M2234						
M2235						
M2236						
M2237						
M2238						
M2239						
M2240	Axis 1	Speed change "0" accepting flag	Operation cycle		Status signal (Note-1), (Note-2)	
M2241	Axis 2					
M2242	Axis 3					
M2243	Axis 4					
M2244	Axis 5					
M2245	Axis 6					
M2246	Axis 7					
M2247	Axis 8					
M2248	Axis 9					
M2249	Axis 10					
M2250	Axis 11					
M2251	Axis 12					
M2252	Axis 13					
M2253	Axis 14					
M2254	Axis 15					
M2255	Axis 16					
M2256	Axis 17					
M2257	Axis 18					
M2258	Axis 19					
M2259	Axis 20					
M2260	Axis 21					
M2261	Axis 22					
M2262	Axis 23					
M2263	Axis 24					
M2264	Axis 25					
M2265	Axis 26					
M2266	Axis 27					
M2267	Axis 28					
M2268	Axis 29					
M2269	Axis 30					
M2270	Axis 31					
M2271	Axis 32					
M2272	Axis 1	Control loop monitor status	Operation cycle		Status signal (Note-1), (Note-2)	
M2273	Axis 2					
M2274	Axis 3					
M2275	Axis 4					

Device No.	Signal name		Refresh cycle	Fetch cycle	Signal direction	Remark (Note-5)
M2276	Axis 5	Control loop monitor status	Operation cycle		Status signal (Note-1), (Note-2)	
M2277	Axis 6					
M2278	Axis 7					
M2279	Axis 8					
M2280	Axis 9					
M2281	Axis 10					
M2282	Axis 11					
M2283	Axis 12					
M2284	Axis 13					
M2285	Axis 14					
M2286	Axis 15					
M2287	Axis 16					
M2288	Axis 17					
M2289	Axis 18					
M2290	Axis 19					
M2291	Axis 20					
M2292	Axis 21					
M2293	Axis 22					
M2294	Axis 23					
M2295	Axis 24					
M2296	Axis 25					
M2297	Axis 26					
M2298	Axis 27					
M2299	Axis 28					
M2300	Axis 29					
M2301	Axis 30					
M2302	Axis 31					
M2303	Axis 32					
M2304	Unusable (16 points)		—	—	—	—
M2305						
M2306						
M2307						
M2308						
M2309						
M2310						
M2311						
M2312						
M2313						
M2314						
M2315						
M2316						
M2317						
M2318						
M2319						

(Note-1): The range of axis No. 1 to 8 is valid in the Q172HCPU.

(Note-2): Device area of 9 axes or more is unusable in the Q172HCPU.

(Note-3): This signal is unusable in the SV22 real mode.

(Note-4): It can also be ordered the device of a remark column.

(Note-5): M3080 does not turn off automatically. Turn it off as an user side.

(6) Special relay allocated device list (Status)

Device No.	Signal name	Refresh cycle	Fetch cycle	Signal direction	Remark (Note)
M2320	Fuse blown detection	Error occurrence			M9000
M2321	AC/DC DOWN detection				M9005
M2322	Battery low				M9006
M2323	Battery low latch				M9007
M2324	Self-diagnostic error				M9008
M2325	Diagnostic error				M9010
M2326	Always ON	Main operation			M9036
M2327	Always OFF				M9037
M2328	Clock data error	Error occurrence			M9026
M2329	PCPU WDT error flag				M9073
M2330	PCPU READY complete flag	At request			M9074
M2331	Test mode ON flag				M9075
M2332	External forced stop input flag	Operation cycle		Status signal	M9076
M2333	Manual pulse generator axis setting error flag	Error occurrence			M9077
M2334	TEST mode request error flag				M9078
M2335	Servo program setting error flag				M9079
M2336	CPU No.1 reset flag	At status change			M9240
M2337	CPU No.2 reset flag				M9241
M2338	CPU No.3 reset flag				M9242
M2339	CPU No.4 reset flag				M9243
M2340	CPU No.1 error flag				M9244
M2341	CPU No.2 error flag				M9245
M2342	CPU No.3 error flag				M9246
M2343	CPU No.4 error flag				M9247
M2344	Unusable	—	—	—	—
M2345	CPU No.1 MULTR complete flag	At instruction completion		Status signal	M9216
M2346	CPU No.2 MULTR complete flag				M9217
M2347	CPU No.3 MULTR complete flag				M9218
M2348	CPU No.4 MULTR complete flag				M9219
M2349 to M2399	Unusable (51 points)	—	—	—	—

(Note): The same status as a remark column is output.

(7) Common device list (Command signal)

Device No.	Signal name	Refresh cycle	Fetch cycle	Signal direction	Remark (Note-1), (Note-2)
M3072	PLC ready flag		Main cycle	Command signal	M2000
M3073	Speed switching point designation flag		At start		M2040
M3074	All axes servo ON command		Operation cycle		M2042
M3075	Real/virtual mode change request (SV22)		At virtual mode transition		M2043
M3076	JOG operation simultaneous start command		Main cycle		M2048
M3077	Manual pulse generator 1 enable flag				M2051
M3078	Manual pulse generator 2 enable flag				M2052
M3079	Manual pulse generator 3 enable flag				M2053
M3080	Motion SFC error history clear request flag (Note-3)				M2035
M3081 to M3135	Unusable (55 points)	—	—	—	—

(Note-1): The device of a remarks column turns ON by OFF to ON of the above device, and the device of a remarks column turns OFF by ON to OFF of the above device. The state of a device is not in agreement when the device of a remarks column is turned on directly. In addition, when the request from a data register and the request from the above device are performed simultaneously, the request from the above device becomes effective.

(Note-2): It can also be ordered the device of a remark column.

(Note-3): M3080 does not turn off automatically. Turn it off as an user side.

(8) Special relay allocated device list (Command signal)

Device No.	Signal name	Refresh cycle	Fetch cycle	Signal direction	Remark (Note-1), (Note-2)
M3136	Clock data set request		Main cycle	Command signal	M9025
M3137	Clock data read request				M9028
M3138	Error reset				M9060
M3139 to M3199	Unusable (61 points)	—	—	—	—

(Note-1): The device of a remarks column turns ON by OFF to ON of the above device, and the device of a remarks column turns OFF by ON to OFF of the above device. The state of a device is not in agreement when the device of a remarks column is turned on directly.

(Note-2): It can also be ordered the device of a remark column.

(9) Axis monitor device list

Axis No.	Device No.	Signal name
1	D0 to D19	
2	D20 to D39	
3	D40 to D59	
4	D60 to D79	
5	D80 to D99	
6	D100 to D119	
7	D120 to D139	
8	D140 to D159	
9	D160 to D179	
10	D180 to D199	
11	D200 to D219	
12	D220 to D239	
13	D240 to D259	
14	D260 to D279	
15	D280 to D299	
16	D300 to D319	
17	D320 to D339	
18	D340 to D359	
19	D360 to D379	
20	D380 to D399	
21	D400 to D419	
22	D420 to D439	
23	D440 to D459	
24	D460 to D479	
25	D480 to D499	
26	D500 to D519	
27	D520 to D539	
28	D540 to D559	
29	D560 to D579	
30	D580 to D599	
31	D600 to D619	
32	D620 to D639	

	Signal name	Refresh cycle	Fetch cycle	Unit	Signal direction
0	Feed current value	Operation cycle		Command unit	Monitor device
1					
2	Real current value				
3					
4	Deviation counter value			PLS	
5					
6	Minor error code	Immediate		—	
7	Major error code				
8	Servo error code	Main cycle			
9	Home position return re-travel value	Operation cycle		PLS	
10	Travel value after proximity dog ON			Command unit	
11					
12	Execute program No.	At start		—	
13	M-code	Operation cycle			
14	Torque limit value			%	
15	Data set pointer for constant-speed control	At start/during start		—	
16	Travel value change register		Operation cycle	Command unit	Command device
17					
18	Real current value at stop input	Operation cycle			Monitor device
19					

(Note-1): The range of axis No.1 to 8 is valid in the Q172HCPU.
(Note-2): Device area of 9 axes or more is unusable in the Q172HCPU.

(10) Control change register list

Axis No.	Device No.	Signal name
1	D640, D641	
2	D642, D643	
3	D644, D645	
4	D646, D647	
5	D648, D649	
6	D650, D651	
7	D652, D653	
8	D654, D655	
9	D656, D657	
10	D658, D659	
11	D660, D661	
12	D662, D663	
13	D664, D665	
14	D666, D667	
15	D668, D669	
16	D670, D671	
17	D672, D673	
18	D674, D675	
19	D676, D677	
20	D678, D679	
21	D680, D681	
22	D682, D683	
23	D684, D685	
24	D686, D687	
25	D688, D689	
26	D690, D691	
27	D692, D693	
28	D694, D695	
29	D696, D697	
30	D698, D699	
31	D700, D701	
32	D702, D703	

	Signal name	Refresh cycle	Fetch cycle	Unit	Signal direction
0 1	JOG speed setting		At start	Command unit	Command device

(Note-1): The range of axis No.1 to 8 is valid in the Q172HCPU.

(Note-2): Device area of 9 axes or more is unusable in the Q172HCPU.

(11) Common device list

Device No.	Signal name		Refresh cycle	Fetch cycle	Signal direction
D704	PLC ready flag request			Main cycle	Command device
D705	Speed switching point specified flag request				
D706	All axes servo ON command request				
D707	Real/virtual mode switching request (SV22)				
D708	JOG operation simultaneous start command request				
D709	Unusable		—	—	—
D710	JOG operation simultaneous start axis setting register			At start	Command device
D711					
D712					
D713					
D714	Manual pulse generator axis 1 No. setting register			At the manual pulse generator enable flag	
D715					
D716	Manual pulse generator axis 2 No. setting register				
D717					
D718	Manual pulse generator axis 3 No. setting register				
D719					
D720	Axis 1	Manual pulse generators 1 pulse input magnification setting register (Note-2), (Note-3)			
D721	Axis 2				
D722	Axis 3				
D723	Axis 4				
D724	Axis 5				
D725	Axis 6				
D726	Axis 7				
D727	Axis 8				
D728	Axis 9				
D729	Axis 10				
D730	Axis 11				
D731	Axis 12				
D732	Axis 13				
D733	Axis 14				
D734	Axis 15				
D735	Axis 16				
D736	Axis 17				
D737	Axis 18				
D738	Axis 19				
D739	Axis 20				
D740	Axis 21				
D741	Axis 22				
D742	Axis 23				
D743	Axis 24				
D744	Axis 25				
D745	Axis 26				
D746	Axis 27				
D747	Axis 28				
D748	Axis 29				
D749	Axis 30				
D750	Axis 31				
D751	Axis 32				

Device No.	Signal name	Refresh cycle	Fetch cycle	Signal direction
D752	Manual pulse generator 1 smoothing magnification setting register		At the manual pulse generator enable flag	Command device
D753	Manual pulse generator 2 smoothing magnification setting register			
D754	Manual pulse generator 3 smoothing magnification setting register			
D755	Manual pulse generator 1 enable flag request		Main cycle	
D756	Manual pulse generator 2 enable flag request			
D757	Manual pulse generator 3 enable flag request			
D758	Unusable	—	—	—
D759	PCPU ready complete flag status	Main cycle		Monitor device
D760	Unusable (30 points)	—	—	—
D761				
D762				
D763				
D764				
D765				
D766				
D767				
D768				
D769				
D770				
D771				
D772				
D773				
D774				
D775				
D776				
D777				
D778				
D779				
D780				
D781				
D782				
D783				
D784				
D785				
D786				
D787				
D788				
D789				
D790	Real mode axis information register (SV22) (Note-1)	Main cycle		Monitor device
D791				
D792	Unusable (8 points)	—	—	—
D793				
D794				
D795				
D796				
D797				
D798				
D799				

(Note-1): This signal is unusable in the SV13/SV22 real mode.
(Note-2): The range of axis No.1 to 8 is valid in the Q172HCPU.
(Note-3): Device area of 9 axes or more is unusable in the Q172HCPU.

(12) Motion register list (#)

Axis No.	Device No.	Signal name
1	#8064 to #8067	
2	#8068 to #8071	
3	#8072 to #8075	
4	#8076 to #8079	
5	#8080 to #8083	
6	#8084 to #8087	
7	#8088 to #8091	
8	#8092 to #8095	
9	#8096 to #8099	
10	#8100 to #8103	
11	#8104 to #8107	
12	#8108 to #8111	
13	#8112 to #8115	
14	#8116 to #8119	
15	#8120 to #8123	
16	#8124 to #8127	
17	#8128 to #8131	
18	#8132 to #8135	
19	#8136 to #8139	
20	#8140 to #8143	
21	#8144 to #8147	
22	#8148 to #8151	
23	#8152 to #8155	
24	#8156 to #8159	
25	#8160 to #8163	
26	#8164 to #8167	
27	#8168 to #8171	
28	#8172 to #8175	
29	#8176 to #8179	
30	#8180 to #8183	
31	#8184 to #8187	
32	#8188 to #8191	

	Signal name (Note-1)	Signal description	Refresh cycle	Signal direction
+0	Servo amplifier type	0 : Unused 256 : MR-J3-B 257 : MR-J3-B (Fully closed loop control) 258 : MR-J3-B (Linear)	When the servo amplifier power-on	Monitor devise
+1	Motor current	×0.1[%]	Operation cycle 1.7[ms] or less: Operation cycle Operation cycle 3.5[ms] or more: 3.5[ms]	
+2	Motor speed	×0.1[r/min]		
+3				

(Note-1) : The value that the lowest servo monitor device No. was added "+0, +1 ···" on each axis is shown.

(13) Special relay list

Device No.	Signal name	Refresh cycle	Signal type
M9073	PCPU WDT error flag	Main cycle	Status signal
M9074	PCPU REDAY complete flag		
M9075	TEST mode ON flag		
M9076	External forced stop input flag		
M9077	Manual pulse generator axis setting error flag		
M9078	TEST mode request error flag		
M9079	Servo program setting error flag		

(14) Special register list

Device No.	Signal name	Refresh cycle	Fetch cycle	Signal direction
D9112	Connect/disconnect	Main cycle	Main cycle	Command device/ Monitor device
D9180	Unusable	—	—	—
D9181				
D9182	Test mode request error information	At test mode request		Monitor device
D9183				
D9184	Motion CPU WDT error cause	At Motion CPU WDT error occurrence		
D9185	Manual pulse generator axis setting error information	At the manual pulse generator enable flag ↑		
D9186				
D9187				
D9188	Motion operation cycle	Operation cycle		
D9189	Error program No.	At start		
D9190	Error item information			
D9191	Servo amplifier loading information	At power supply on/ operation cycle		
D9192				
D9193	Real/virtual mode switching error information (SV22)	At virtual mode transition		
D9194				
D9195				
D9196	PC link communication error codes	Operation cycle		
D9197	Operation cycle of the Motion CPU setting	At power supply on		
D9198	Unusable	—	—	—
D9199				
D9200	State of switch	Main cycle		Monitor device
D9201	State of LED	Immediate		

WARRANTY

Please confirm the following product warranty details before using this product.

1. Gratis Warranty Term and Gratis Warranty Range

If any faults or defects (hereinafter "Failure") found to be the responsibility of Mitsubishi occurs during use of the product within the gratis warranty term, the product shall be repaired at no cost via the sales representative or Mitsubishi Service Company.
However, if repairs are required onsite at domestic or overseas location, expenses to send an engineer will be solely at the customer's discretion. Mitsubishi shall not be held responsible for any re-commissioning, maintenance, or testing on-site that involves replacement of the failed module.

[Gratis Warranty Term]

Note that an installation period of less than one year after installation in your company or your customer's premises or a period of less than 18 months (counted from the date of production) after shipment from our company, whichever is shorter, is selected.

[Gratis Warranty Range]

(1) Diagnosis of failure
As a general rule, diagnosis of failure is done on site by the customer.
However, Mitsubishi or Mitsubishi service network can perform this service for an agreed upon fee upon the customer's request.
There will be no charges if the cause of the breakdown is found to be the fault of Mitsubishi.

(2) Breakdown repairs
There will be a charge for breakdown repairs, exchange replacements and on site visits for the following four conditions, otherwise there will be a charge.
1) Breakdowns due to improper storage, handling, careless accident, software or hardware design by the customer
2) Breakdowns due to modifications of the product without the consent of the manufacturer
3) Breakdowns resulting from using the product outside the specified specifications of the product
4) Breakdowns that are outside the terms of warranty

Since the above services are limited to Japan, diagnosis of failures, etc. are not performed abroad.
If you desire the after service abroad, please register with Mitsubishi. For details, consult us in advance.

2. Exclusion of Loss in Opportunity and Secondary Loss from Warranty Liability

Mitsubishi will not be held liable for damage caused by factors found not to be the cause of Mitsubishi; opportunity loss or lost profits caused by faults in the Mitsubishi products; damage, secondary damage, accident compensation caused by special factors unpredictable by Mitsubishi; damages to products other than Mitsubishi products; and to other duties.

3. Onerous Repair Term after Discontinuation of Production

Mitsubishi shall accept onerous product repairs for seven years after production of the product is discontinued.

4. Delivery Term

In regard to the standard product, Mitsubishi shall deliver the standard product without application settings or adjustments to the customer and Mitsubishi is not liable for on site adjustment or test run of the product.

5. Precautions for Choosing the Products

(1) These products have been manufactured as a general-purpose part for general industries, and have not been designed or manufactured to be incorporated in a device or system used in purposes related to human life.
(2) Before using the products for special purposes such as nuclear power, electric power, aerospace, medicine, passenger movement vehicles or under water relays, contact Mitsubishi.
(3) These products have been manufactured under strict quality control. However, when installing the product where major accidents or losses could occur if the product fails, install appropriate backup or failsafe functions in the system.
(4) When exporting any of the products or related technologies described in this catalogue, you must obtain an export license if it is subject to Japanese Export Control Law.

MOTION CONTROLLER Qseries
SV13/SV22(REAL MODE)Programming Manual
(Q173HCPU/Q172HCPU)

MITSUBISHI ELECTRIC CORPORATION

HEAD OFFICE : TOKYO BUILDING, 2-7-3 MARUNOUCHI, CHIYODA-KU, TOKYO 100-8310, JAPAN

MODEL	Q173H-P-SV13/22REALE
MODEL CODE	1XB913
IB(NA)-0300113-B(0609)MEE	

When exported from Japan, this manual does not require application to the Ministry of Economy, Trade and Industry for service transaction permission.

Specifications subject to change without notice.