MITSUBISHI

Digital-Analog Converter Module

User's Manual
(Hardware)

Q62DAN
Q64DAN
Q68DAVN
Q68DAIN

Thank you for purchasing the Mitsubishi general-purpose programmable controller MELSEC-Q Series

Prior to use, please read this manual thoroughly and familiarize yourself with the product.

MELSEC-Q
Mitsubishi Programmable Controller

MODEL	Q-D/A-N-U-H/W
MODEL CODE	13JP80
IB(NA)-0800321-C(0808)MEE	

● SAFETY PRECAUTIONS ●

(Always read these instructions before using the equipment.)

Before using this product, please read this manual and the relevant manuals introduced in this manual carefully and pay full attention to safety to handle the product correctly.
These instructions apply only to Mitsubishi equipment. Refer to the user's manual of the CPU module to use for a description of the programmable control system safety instructions.
In this manual, the safety instructions are ranked as "DANGER" and "CAUTION".

DANGER	Indicates that incorrect handling may cause hazardous conditions, resulting in death or severe injury.
CAUTION	Indicates that incorrect handling may cause hazardous conditions, resulting in medium or slight personal injury or physical damage.

Note that the **CAUTION** level may lead to a serious consequence according to the circumstances.
Always follow the instructions of both levels because they are important to personal safety.
Please save this manual to make it accessible when required and always forward it to the end user.

[Design Precautions]

CAUTION

- Do not bunch the control wires or communication cables with the main circuit or power wires, or install them close to each other.
  They should be installed 100 mm (3.94 inch) or more from each other.
  Not doing so could result in noise that would cause erroneous operation.
- At power ON/OFF, voltage or current may instantaneously be output from the output terminal of this module. In such case, wait until the analog output becomes stable to start controlling the external device.

[Installation Precautions]

⚠CAUTION

- Use the programmable controller in an environment that meets the general specifications given in the User's Manual of the CPU module being used. Using this programmable controller in an environment outside the range of the general specifications could result in electric shock, fire, erroneous operation, and damage to or deterioration of the product.
- While pressing the installation lever located at the bottom of module, insert the module fixing tab into the fixing hole in the base unit until it stops. Then, securely mount the module with the fixing hole as a supporting point. Incorrect loading of the module can cause a malfunction, failure or drop. When using the programmable controller in the environment of much vibration, tighten the module with a screw.
- Tighten the screw in the specified torque range.
  Undertightening can cause a drop, short circuit or malfunction.
  Overtightening can cause a drop, short circuit or malfunction due to damage to the screw or module.
- Completely turn off the externally supplied power used in the system before mounting or removing the module.
  Not doing so could result in damage to the product.
- Do not directly touch the module's conductive parts or electronic components.
  Touching the conductive parts could cause an operation failure or give damage to the module.

[Wiring Precautions]

⚠CAUTION

- Be sure to ground the FG terminals to the protective ground conductor.
  Not doing so could result in electric shock or erroneous operation.
- Use applicable solderless terminals and tighten with the specified torque. If any solderless spade terminal is used, it may be disconnected when the terminal screw comes loose, resulting in failure.
- When turning on the power supply or operating the module after installation or wiring work, be sure that the module's terminal covers are correctly attached.
  Not attaching the terminal cover could result in electric shock.
- Tighten the terminal screws with the specified torque.
  If the terminal screws are loose, it could result in short circuits, fire, or erroneous operation.
  Tightening the terminal screws too far may cause damages to the screws and/or the module, resulting in fallout, short circuits, or malfunction.
- Be sure there are no foreign substances such as sawdust or wiring debris inside the module.
  Such debris could cause fires, damage, or erroneous operation.
- The module has an ingress prevention label on its top to prevent foreign matter, such as wire offcuts, from entering the module during wiring.
  Do not peel this label during wiring.
  Before starting system operation, be sure to peel this label because of heat dissipation.

REVISIONS

＊ The manual number is given on the bottom right of the top cover.

Print Date	*Manual Number	Revision
Aug.,2005	IB(NA)-0800321-A	First edition
Jun.,2007	IB(NA)-0800321-B	Correction Chapter 3, 6
Aug.,2008	IB(NA)-0800321-C	Correction Compliance with the EMC and Low Voltage Directives, Chapter 4

CONTENTS

About Manual

The following manual is also related to this product.
In necessary, order it by quoting the details in the table below.

Related Manual

Manual Name	Manual Number (Model Code)
Digital-Analog Converter Module User's Manual Q62DAN/Q64DAN/Q68DAVN/Q68DAIN/Q62DA/ Q64DA/Q68DAV/Q68DAI/GX Configurator-DA (SW2D5C-QDAU-E)	SH-080054 (13JR02)

Compliance with the EMC and Low Voltage Directives

(1) For programmable controller system
To configure a system meeting the requirements of the EMC and Low Voltage Directives when incorporating the Mitsubishi programmable controller (EMC and Low Voltage Directives compliant) into other machinery or equipment, refer to Chapter 9 "EMC AND LOW VOLTAGE DIRECTIVES" of the QCPU User's Manual (Hardware Design, Maintenance and Inspection).
The CE mark, indicating compliance with the EMC and Low Voltage Directives, is printed on the rating plate of the programmable controller.

(2) For the product
For the compliance of this product with the EMC and Low Voltage Directives,refer to Section 9.1.3 "Cables" in Chapter 9 "EMC AND LOW VOLTAGE DIRECTIVES" of the QCPU User's Manual (Hardware Design, Maintenance and Inspection).

1. Overview

This manual explains specifications and the names of the components for the following modules which are used in combination with the MELSEC-Q Series CPU module.

- Q62DAN type digital-analog converter module (hereinafter referred to as the Q62DAN)
- Q64DAN type digital-analog converter module (hereinafter referred to as the Q64DAN)
- Q68DAVN type digital-analog converter module (hereinafter referred to as the Q68DAVN)
- Q68DAIN type digital-analog converter module (hereinafter referred to as the Q68DAIN)

In this manual, the Q62DAN, Q64DAN, Q68DAVN and Q68DAIN are collectively referred to as the D/A (Digital-Analog) converter modules.
After unpacking, confirm that the following products are enclosed.

Model code	Product name	Quantity
Q62DAN	Q62DAN Model Digital-Analog Converter module	1
Q64DAN	Q64DAN Model Digital-Analog Converter module	1
Q68DAVN	Q68DAVN Model Digital-Analog Converter module	1
	FG terminal L-Shaped metal fitting	1
Q68DAIN	Q68DAIN Model Digital-Analog Converter module	1
	FG terminal L-Shaped metal fitting	1

2. Specifications

The specifications for the D/A converter module are shown in the following table. For general specifications, refer to the operation manual for the CPU module being used.

Item \ Model name		Q62DAN	Q64DAN	Q68DAVN	Q68DAIN
Number of analog output points		2 points (2 channels)	4 points (4 channels)	8 points (8 channels)	
Digital input		16-bit signed binary (normal resolution mode: -4096 to 4095, high resolution mode: -12288 to 12287, -16384 to 16383)			
Analog output	Voltage	–10 to 10 V DC (External load resistance value: 1 kΩ to 1MΩ)			—
	Current	0 to 20 mA DC (External load resistance value: 0Ω to 600Ω)		—	0 to 20 mA DC (External load resistance value: 0Ω to 600Ω)
xI/O characteristics, Maximum resolution					

Analog output range		Normal resolution mode		High resolution mode	
		Digital input value	Maximum resolution	Digital input value	Maximum resolution
Voltage	0 to 5V	0 to 4000	1.25 mV	0 to 12000	0.416 mV
	1 to 5V		1.0 mV		0.333 mV
	-10 to 10V	-4000 to 4000	2.5 mV	-16000 to 16000	0.625 mV
	User range setting		0.75 mV	-12000 to 12000	0.333 mV
Current	0 to 20 mA	0 to 4000	5 μA	0 to 12000	1.66 μA
	4 to 20 mA		4 μA		1.33 μA
	User range setting	-4000 to 4000	1.5 μA	-12000 to 12000	0.83 μA

Accuracy (Accuracy in respect to maximum analog output value)	Ambient temperature 25 ± 5 °C	Within ± 0.1 % (Voltage: ±10 mV, Current: ± 20 μA)			
	Ambient temperature 0 to 55 °C	Within ± 0.3 % (Voltage: ± 30 mV, Current: ± 60 μA)			
Conversion speed		80 μs/channel			
Absolute maximum output	Voltage	± 12 V			—
	Current	21 mA		—	21 mA
E^2PROM write count		Max. 100 thousand times			
Output short circuit protection		Available			

Item \ Model name	Q62DAN	Q64DAN	Q68DAVN	Q68DAIN
Insulation method	Between the I/O terminal and programmable controller power supply : Photocoupler isolation Between output channels : No isolation Between external supply power and analog output : Transformer isolation			
Dielectric withstand voltage	Between the I/O terminal and programmable controller power supply : 500VAC for 1 minute Between external supply power and analog output : 500VAC for 1 minute			
Insulation resistance	Between the I/O terminal and programmable controller power supply : 500VDC 20MΩ or more Between external supply power and analog output : 500VDC 20MΩ or more			
I/O occupied points	16 points (I/O assignment: Intelligent 16 points)			
Connected terminals	18-points terminal block			
Applicable wire size	0.3 to 0.75 mm^2			
Applicable solderless terminal	R1.25-3 (A solderless terminal with sleeve cannot be used)		FG terminal: R1.25-3, 1.25-YS3, RAV1.25-3, V1.25-YS3A Other terminals than FG: R1.25-3 (A solderless terminal with sleeve cannot be used)	
External supply power	24 V DC + 20 %, – 15 %			
	Ripple, spike 500 mV p-p or less			
	Inrush current: 2.5 A, within 250 μs	Inrush current: 2.5 A, within 260 μs	Inrush current: 2.5 A, within 230 μs	Inrush current: 2.5 A, within 230 μs
	0.15 A	0.24 A	0.20 A	0.27 A
Internal current consumption (5 V DC)	0.33 A	0.34 A	0.38 A	0.38 A
Weight	0.19 kg	0.20 kg	0.20 kg	0.20 kg

3. Part Names

This section explains the names of the components for the D/A conversion module.

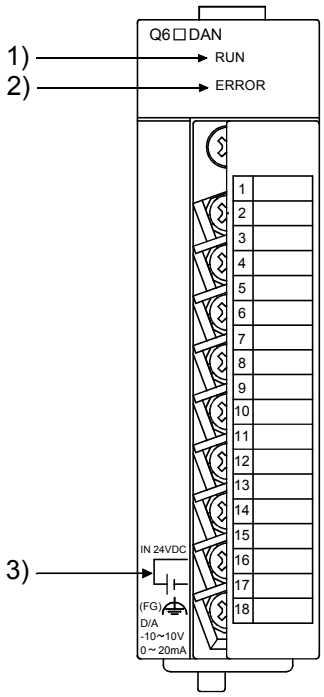

Terminal number	Signal name			
	Q62DAN		Q64DAN	
1	CH1	V+	CH1	V+
2		COM		COM
3		I+		I+
4	Vacant		Vacant	
5	CH2	V+	CH2	V+
6		COM		COM
7		I+		I+
8	Vacant		Vacant	
9	Vacant		CH3	V+
10	Vacant			COM
11	Vacant			I+
12	Vacant		Vacant	
13	Vacant		CH4	V+
14	Vacant			COM
15	Vacant			I+
16	24 V			
17	24 G			
18	FG			

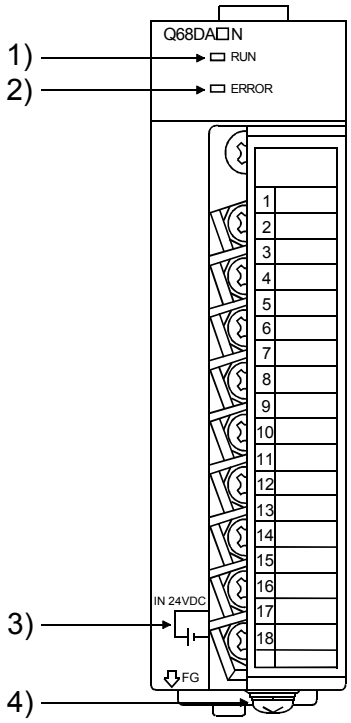

Terminal number	Signal name			
	Q68DAVN		Q68DAIN	
1	CH1	V+	CH1	I+
2		COM		COM
3	CH2	V+	CH2	I+
4		COM		COM
5	CH3	V+	CH3	I+
6		COM		COM
7	CH4	V+	CH4	I+
8		COM		COM
9	CH5	V+	CH5	I+
10		COM		COM
11	CH6	V+	CH6	I+
12		COM		COM
13	CH7	V+	CH7	I+
14		COM		COM
15	CH8	V+	CH8	I+
16		COM		COM
17	24 V			
18	24 G			

Number	Name	Description
1)	RUN LED	Displays the operating status of the D/A converter module. On : Normal operation Flashing : During offset/gain setting mode Off : 5V power switched off, watchdog timer error occurred, or online module change enabled
2)	ERROR LED	Displays the error status of the D/A converter module. On : Error Off : Normal operation Flashing : Error in switch settings Switch No. 5 of the intelligent function module has been set to a value other than "0".
3)	External power supply terminal	This is the terminal for connecting the 24 V DC external power supply.
4)	FG terminal	Frame ground terminal

4. Handling Precautions

(1) Do not drop the module case or subject it to heavy impact.
(2) Do not remove the PCB of the module from its case. Doing so may cause the module to fail.
(3) Be careful not to let foreign particles such as swarf or wire chips enter the module. They may cause a fire, mechanical failure or malfunction.
(4) The top surface of the module is covered with a protective film to prevent foreign objects such as wire burrs from entering the module during wiring. Do not remove this film until the wiring is complete. Before operating the system, be sure to remove the film to provide adequate heat ventilation.
(5) Tighten the screws such as module fixing screws within the following ranges.
Loose screws may cause short circuits, failures, or malfunctions.

Screw location	Tightening torque range
Module fixing screw (M3 screw) *1	0.36 to 0.48 N·m
Terminal block screw (M3 screw)	0.42 to 0.58 N·m
Terminal block mounting screw (M3.5 screw)	0.66 to 0.89 N·m
FG terminal screw (M3 screw) *2	0.42 to 0.58 N·m

*1: The module can be easily fixed onto the base unit using the hook at the top of the module.
However, it is recommended to secure the module with the module fixing screw if the module is subject to significant vibration.
*2: Q68DAVN, Q68DAIN only

5. Wiring

5.1 Wiring precautions

In order to optimize the functions of the D/A converter module and ensure system reliability, external wiring that is protected from noise is required.
Please observe the following precautions for external wiring:

(1) Use separate cables for the AC control circuit and the external input signals of the D/A converter module to avoid the influence of the AC side surges and inductions.

(2) Do not mount the cables close to or bundle them with the main circuit line, a high-voltage cable or a load cable from other than the programmable controller. This may increase the effects of noise, surges and induction.

(3) Perform a one-point grounding for shielded lines and the shields of sealed cables.

(4) A solderless terminal with insulating sleeve cannot be used for the terminal block. Covering the cable- connection portion of the solderless terminal with a marked tube or an insulation tube is recommended.

Point
When using Q68DAVN or Q68DAIN, If it is difficult to wire FG terminals due to the limited installation space, use FG terminal L-shaped metal fitting.

5.2 External wiring

(1) For Q62DAN or Q64DAN

(a) For voltage output

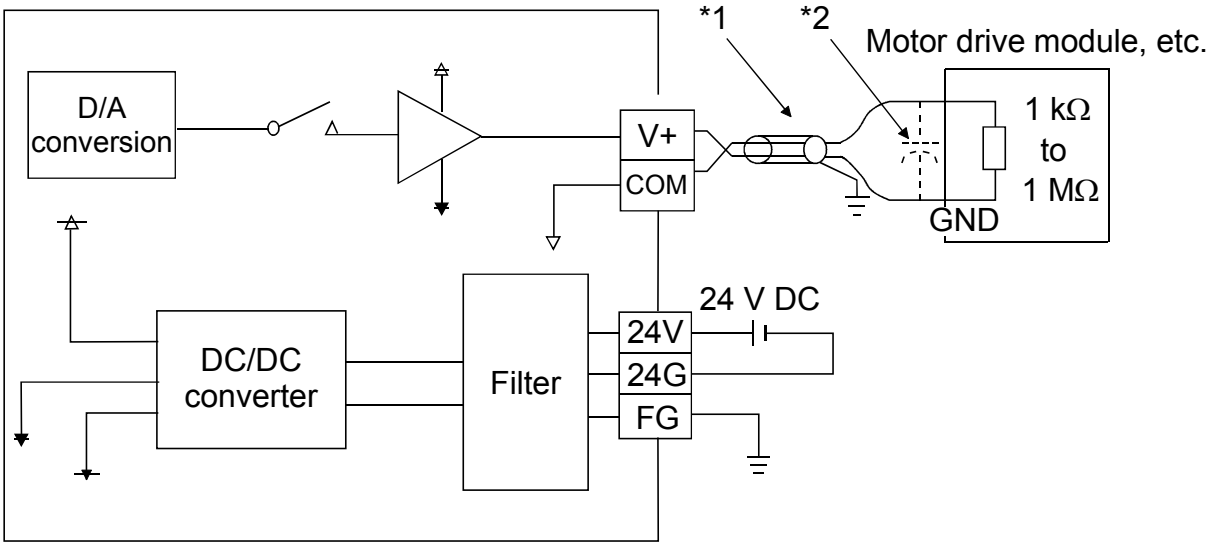

(b) For current output

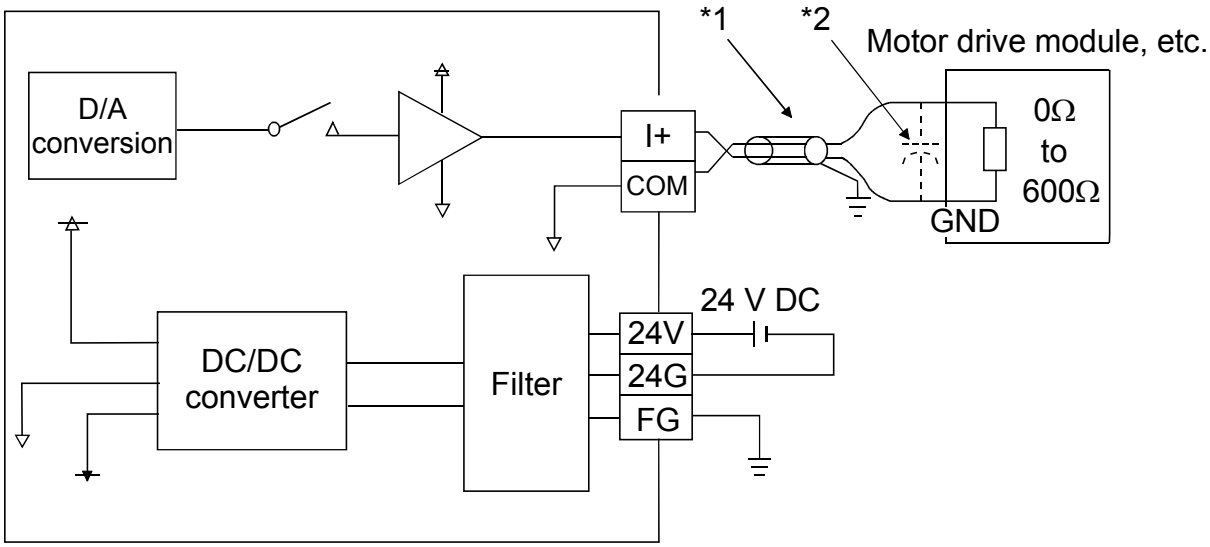

*1 Use a twisted two core shielded wire for the power wire.
*2 If there is noise or ripples in the external wiring, connect a 0.1 to 0.47μF25V capacitor between the V+/I+ terminal and COM.

(2) For Q68DAVN

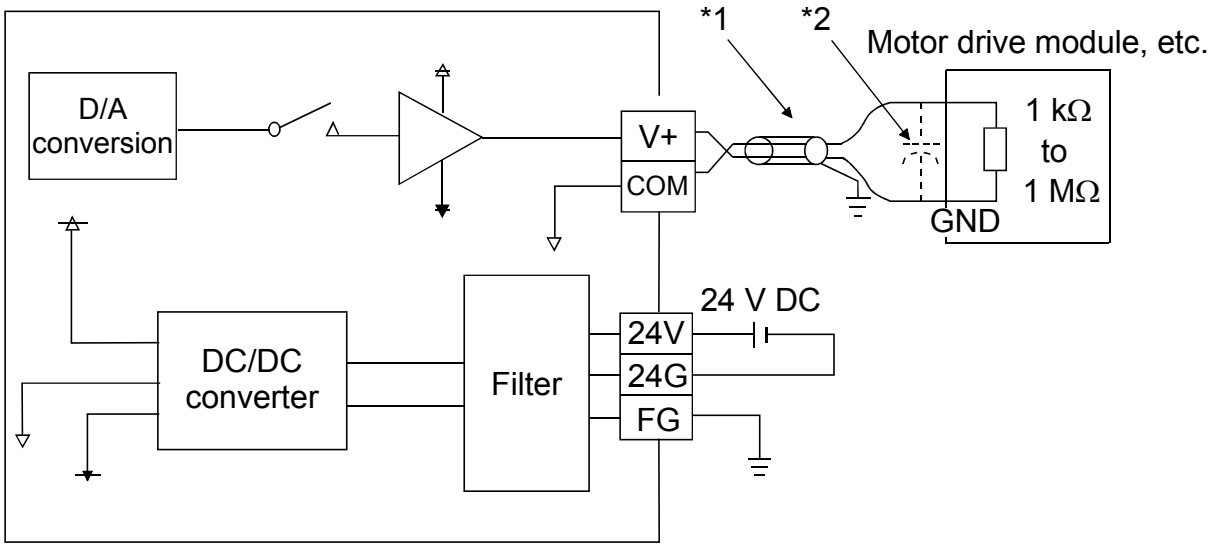

(3) For Q68DAIN

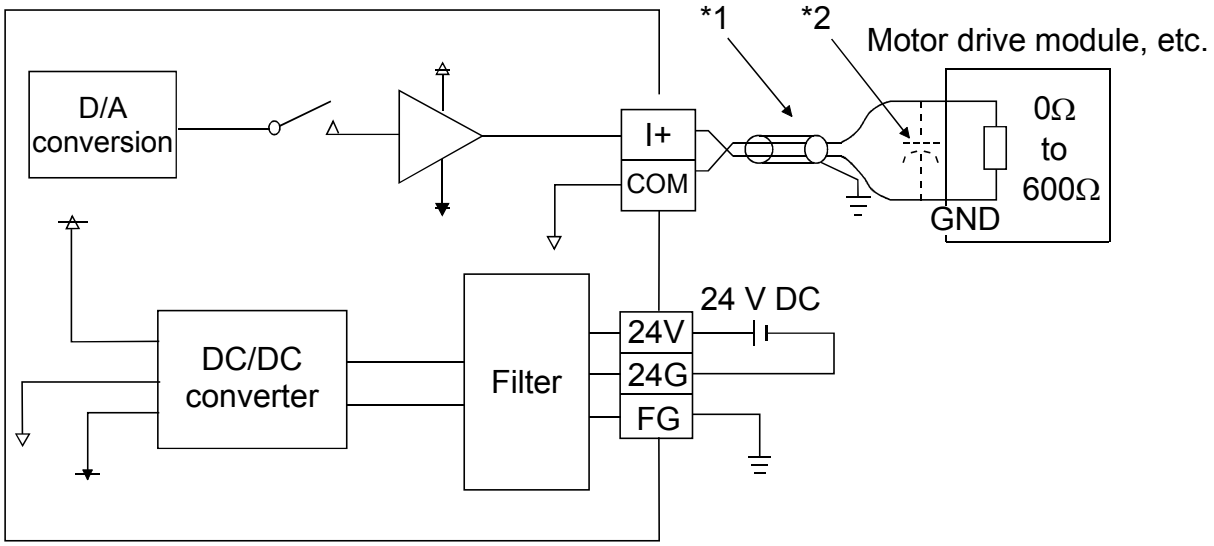

*1 Use a twisted two core shielded wire for the power wire.
*2 If there is noise or ripples in the external wiring, connect a 0.1 to 0.47μF25V capacitor between the V+/I+ terminal and COM.

5.3 Switch setting for intelligent functional module

The settings for the intelligent function module are performed using the I/O allocation settings for the GX Developer. When the intelligent function module switches are not set, the default value for switches 1 to 5 is 0.

	Setting item	
Switch 1	Output range setting (CH1 to CH4) □□□□ H CH4 CH3 CH2 CH1	
Switch 2	Output range setting (CH5 to CH8) □□□□ H CH8 CH7 CH6 CH5	

Analog output range	Output range setting value
4 to 20 mA	0H*[1]
0 to 20 mA	1H
1 to 5 V	2H
0 to 5 V	3H
– 10 to 10 V	4H
User range setting	FH

Switch 3	For Q62DAN and Q64DAN □□□□ H CH4 CH3 CH2 CH1	HOLD/CLEAR function setting 0H : CLEAR 1 to FH (numeric value other than 0H)* : HOLD
	For Q68DAVN and Q68DAIN b15 b8 b7 b6 b5 b4 b3 b2 b1 b0 0 to 0 □□□□□□□□ CH8 CH7 CH6 CH5 CH4 CH3 CH2 CH1	HOLD/CLEAR function setting 0 : CLEAR 1 : HOLD
Switch 4	□□□□ H 00H : Normal mode (non-synchronized) 01 to FFH (numeric value other than 00H)*: Synchronized output mode 0H : Normal resolution mode 1 to FH (numeric value other than 0H)*: High resolution mode 0H : Normal mode (D/A conversion processing) 1 to FH (numeric value other than 0H)*: Offset/gain setting mode	
Switch 5	0 : Fixed	

* Setting any value within the setting range will provide the same operation. When the setting range is 1 to FH, set 1 for example.

Point

(1) Depending on the type of module used, the settings for D/A module output range are shown below.
- Q62DAN, Q64DAN.....0H to 4H, FH
- Q68DAVN.....0H, 2H to 4H, FH

  ∗1: When the setting is 0H, the output operating range swill be 1 to 5 V.
- Q68DAIN.....0H, 1H, FH

(2) For Q62DAN and Q64DAN, leave the switch 2 vacant.

(3) For Q68DAVN and Q68DAIN, the switch 3 will set in binary.
Setting will be easy if the input format is changed to binary number.

Example) For setting CH3, CH5 and CH8 to HOLD.

Input format	Binary	Hexadecimal
Setting value	10010100	94 H

(4) If the offset/gain setting mode is set using intelligent function module switch 4, other settings by switch 4 (settings for resolution mode and synchronous output mode) will be ignored.

(5) Perform the offset/gain settings after checking the RUN LED flashes in offset/gain setting mode. If the RUN LED does not flash, check to see if the switch 4 setting is correct.

(6) Since the analog output value will differ considerably, depending on the resolution mode setting, thoroughly check the settings for the intelligent function module switches before performing the analog output processing.

Example) Analog output value when the setting range is -10 to 10V and the digital input value is set to 4000.

	High resolution mode	Normal resolution mode
Analog output value	About 2.5 V	About 10.0 V

6. External Dimensions

(1) Q62DAN

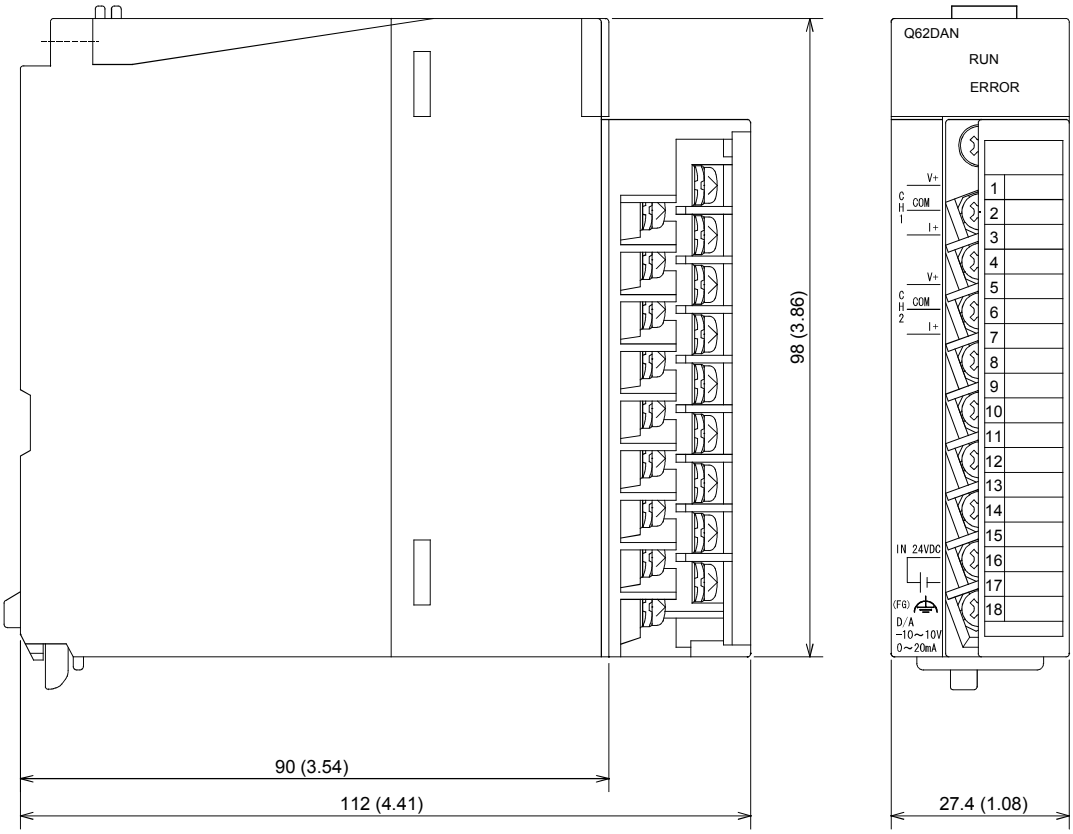

Unit: mm (inch)

(2) Q64DAN

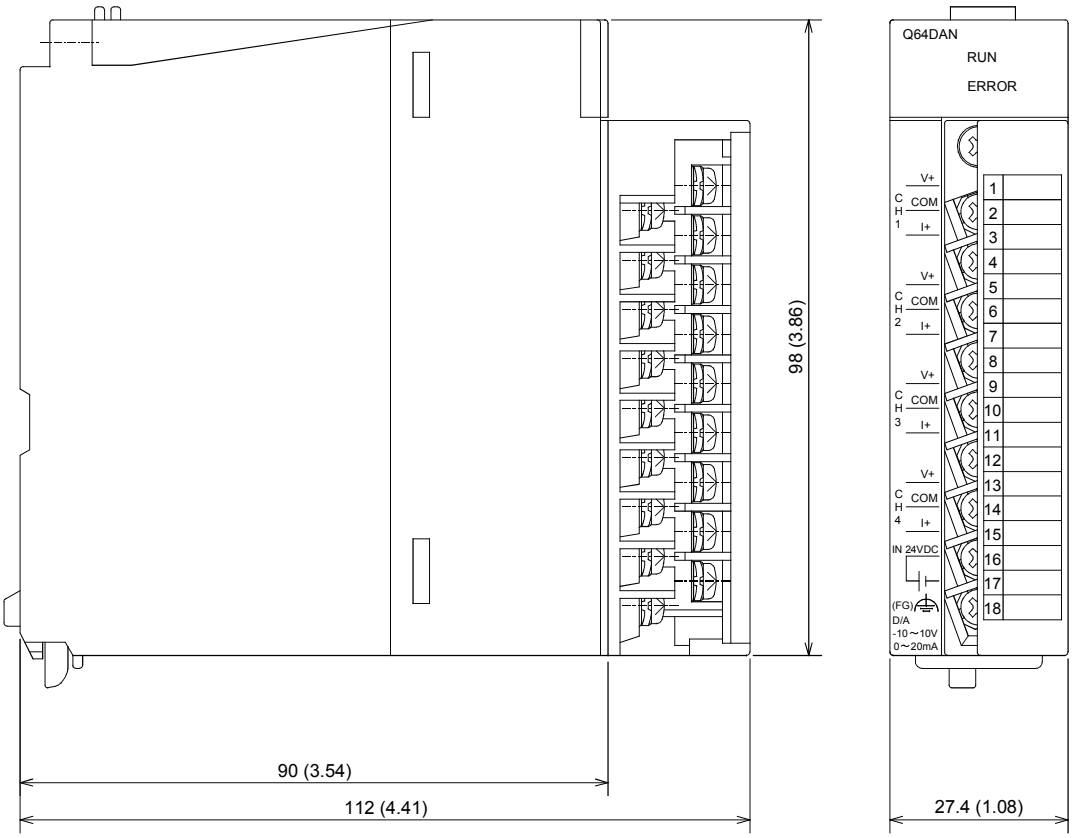

Unit: mm (inch)

(3) Q68DAVN

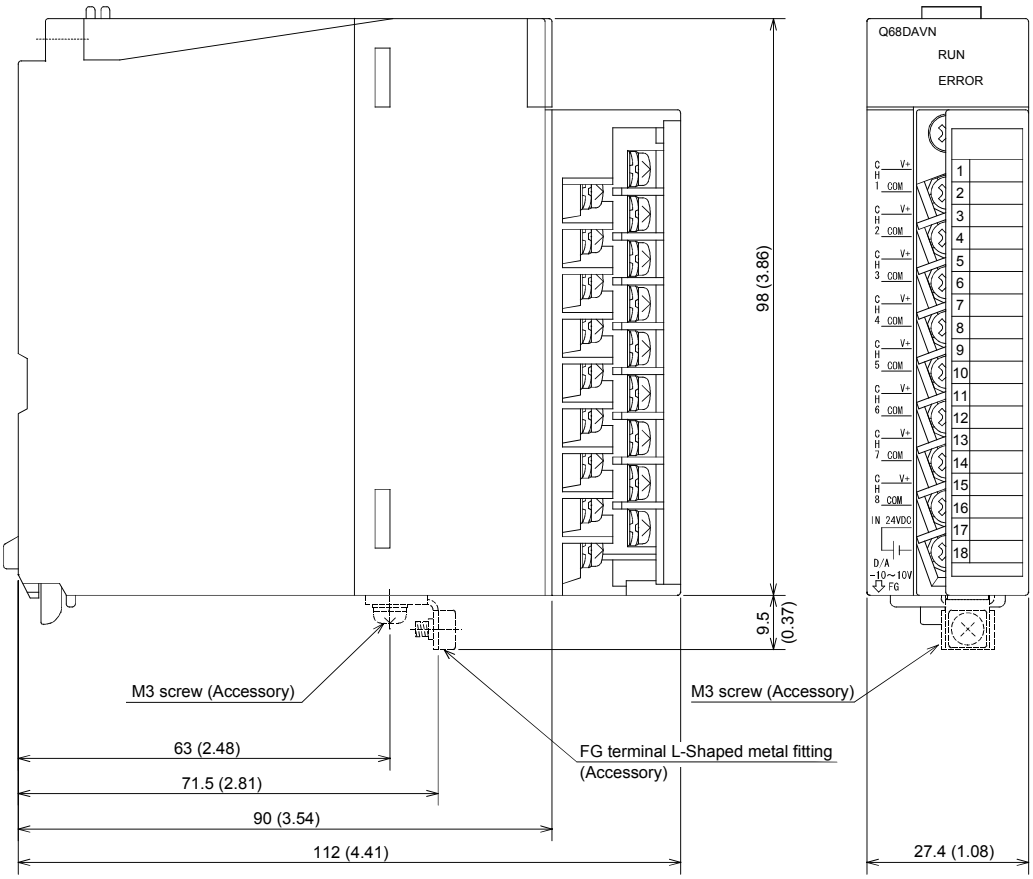

Unit: mm (inch)

(4) Q68DAIN

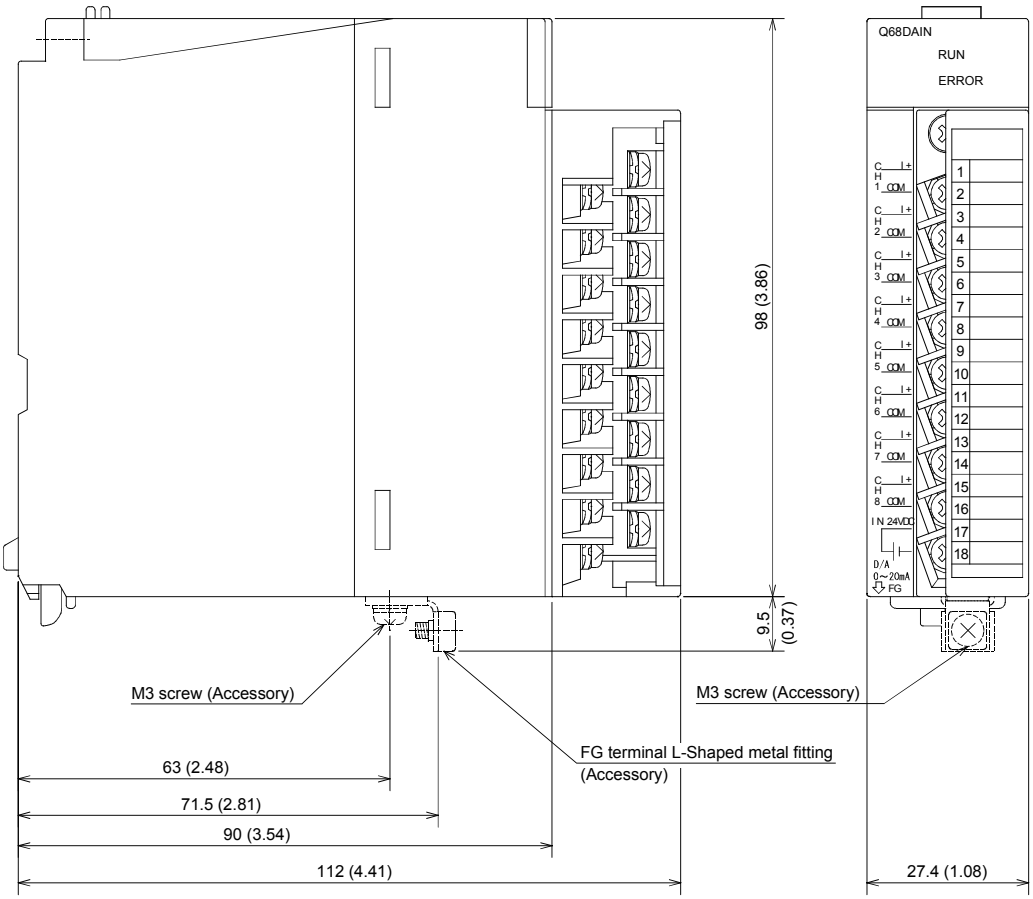

Unit: mm (inch)

MEMO

Warranty

Mitsubishi will not be held liable for damage caused by factors found not to be the cause of Mitsubishi; machine damage or lost profits caused by faults in the Mitsubishi products; damage, secondary damage, accident compensation caused by special factors unpredictable by Mitsubishi; damages to products other than Mitsubishi products; and to other duties.

⚠**For safe use**

- This product has been manufactured as a general-purpose part for general industries, and has not been designed or manufactured to be incorporated in a device or system used in purposes related to human life.
- Before using the product for special purposes such as nuclear power, electric power, aerospace, medicine or passenger movement vehicles, consult with Mitsubishi.
- This product has been manufactured under strict quality control. However, when installing the product where major accidents or losses could occur if the product fails, install appropriate backup or failsafe functions in the system.

Country/Region	Sales office/Tel
U.S.A	Mitsubishi Electric Automation Inc. 500 Corporate Woods Parkway Vernon Hills, IL 60061, U.S.A. Tel : +1-847-478-2100
Brazil	MELCO-TEC Rep. Com.e Assessoria Tecnica Ltda. Rua Correia Dias, 184, Edificio Paraiso Trade Center-8 andar Paraiso, Sao Paulo, SP Brazil Tel : +55-11-5908-8331
Germany	Mitsubishi Electric Europe B.V. German Branch Gothaer Strasse 8 D-40880 Ratingen, GERMANY Tel : +49-2102-486-0
U.K	Mitsubishi Electric Europe B.V. UK Branch Travellers Lane, Hatfield, Hertfordshire., AL10 8XB, U.K. Tel : +44-1707-276100
Italy	Mitsubishi Electric Europe B.V. Italian Branch Centro Dir. Colleoni, Pal. Perseo-Ingr.2 Via Paracelso 12, I-20041 Agrate Brianza., Milano, Italy Tel : +39-039-60531
Spain	Mitsubishi Electric Europe B.V. Spanish Branch Carretera de Rubi 76-80, E-08190 Sant Cugat del Valles, Barcelona, Spain Tel : +34-93-565-3131
France	Mitsubishi Electric Europe B.V. French Branch 25, Boulevard des Bouvets, F-92741 Nanterre Cedex, France TEL: +33-1-5568-5568
South Africa	Circuit Breaker Industries Ltd. Private Bag 2016, ZA-1600 Isando, South Africa Tel : +27-11-928-2000
Hong Kong	Mitsubishi Electric Automation (Hong Kong) Ltd. 10th Floor, Manulife Tower, 169 Electric Road, North Point, Hong Kong Tel : +852-2887-8870
China	Mitsubishi Electric Automation (Shanghai) Ltd. 4/F Zhi Fu Plazz, No.80 Xin Chang Road, Shanghai 200003, China Tel : +86-21-6120-0808
Taiwan	Setsuyo Enterprise Co., Ltd. 6F No.105 Wu-Kung 3rd.Rd, Wu-Ku Hsiang, Taipei Hsine, Taiwan Tel : +886-2-2299-2499
Korea	Mitsubishi Electric Automation Korea Co., Ltd. 1480-6, Gayang-dong, Gangseo-ku Seoul 157-200, Korea Tel : +82-2-3660-9552
Singapore	Mitsubishi Electric Asia Pte, Ltd. 307 Alexandra Road #05-01/02, Mitsubishi Electric Building, Singapore 159943 Tel : +65-6470-2460
Thailand	Mitsubishi Electric Automation (Thailand) Co., Ltd. Bang-Chan Industrial Estate No.111 Moo 4, Serithai Rd, T.Kannayao, A.Kannayao, Bangkok 10230 Thailand Tel : +66-2-517-1326
Indonesia	P.T. Autoteknindo Sumber Makmur Muara Karang Selatan, Block A/Utara No.1 Kav. No.11 Kawasan Industri Pergudangan Jakarta - Utara 14440, P.O.Box 5045 Jakarta, 11050 Indonesia Tel : +62-21-6630833
India	Messung Systems Pvt, Ltd. Electronic Sadan NO:III Unit No15, M.I.D.C Bhosari, Pune-411026, India Tel : +91-20-2712-3130
Australia	Mitsubishi Electric Australia Pty. Ltd. 348 Victoria Road, Rydalmere, N.S.W 2116, Australia Tel : +61-2-9684-7777

MITSUBISHI ELECTRIC CORPORATION

HEAD OFFICE : TOKYO BUILDING, 2-7-3 MARUNOUCHI, CHIYODA-KU, TOKYO 100-8310, JAPAN
NAGOYA WORKS : 1-14, YADA-MINAMI 5-CHOME, HIGASHI-KU, NAGOYA, JAPAN

When exported from Japan, this manual does not require application to the Ministry of Economy, Trade and Industry for service transaction permission.

Specifications subject to change without notice.
Printed in Japan on recycled paper.